PLAINTIFF'S EXHIBIT
BEA-13
PENGAD-Bayonne,N.J

7.1/Ko

Koppers Roof Systems 1977

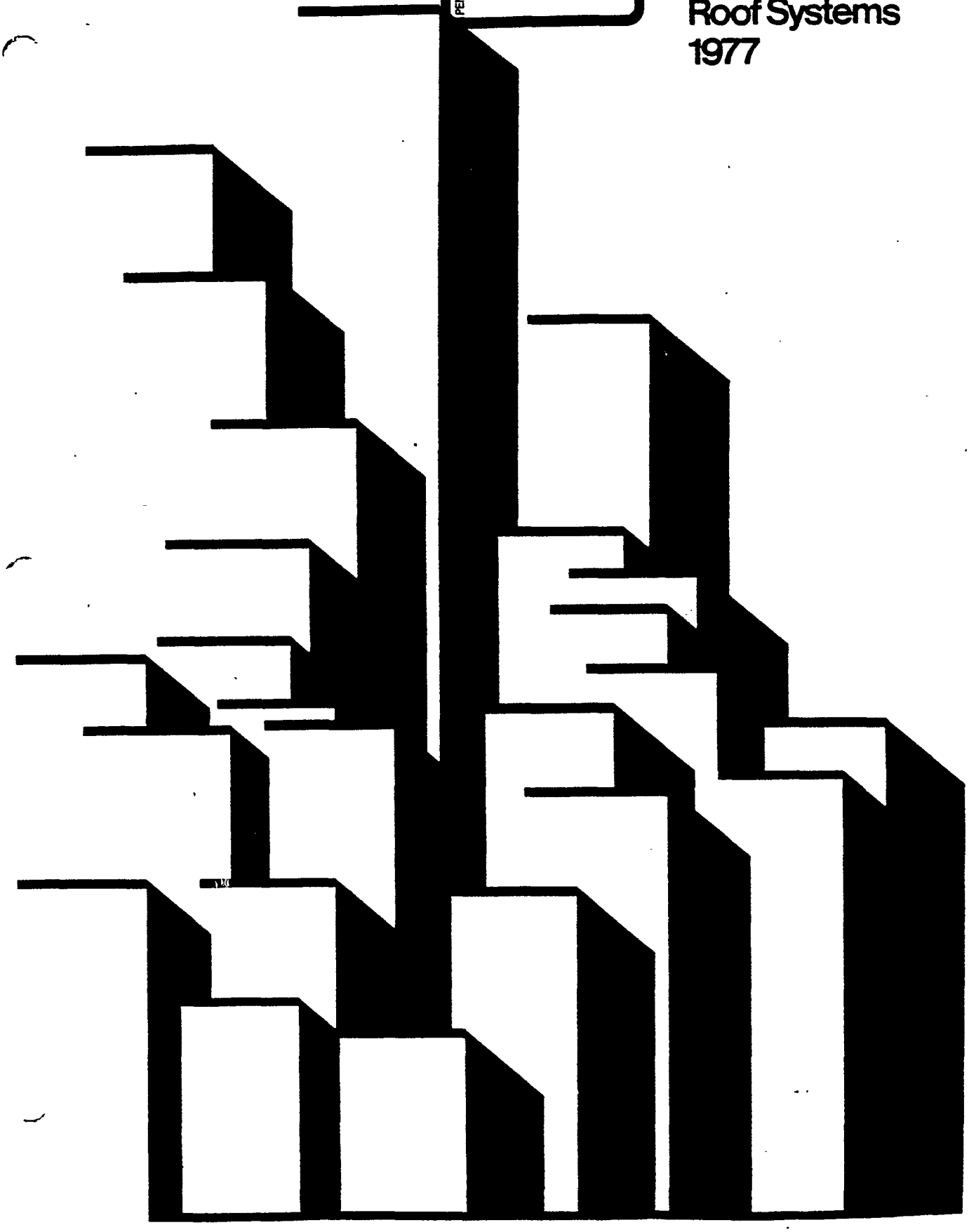

preface

This manual contains recommended roofing specifications and procedures which are based on the many years of Koppers experience and accepted good roofing practice. They are intended to provide the architect, engineer, general contractor, and roofer with the proper information to plan and construct the best roof systems with the most time-proven materials available today.

The availability of a Koppers surety bond or guarantee for roofing and flashing constructed according to the information contained in this manual under Koppers bond and guarantee procedure, and the publishing of these specifications and information shall not be construed as creating any warranty, expressed or implied, with regard to any roofing or flashing for which a bond or guarantee has not been issued.

This roofing manual supersedes all previous roofing manuals and literature published by Koppers.

The specifications and details contained in this manual have been determined to cover the proper procedure for long lasting roofing systems for most areas of our country.

In certain locations, minor variations in details and specifications may be appropriate due to unusual local conditions, such as wind, temperature, humidity, etc. To assure the best application of the proper specifications and details for your area we recommend you consult your Koppers representative.

Notice:

This roofing specification manual contains the latest and best available information as derived from Koppers long experience in the roofing industry. The design criteria and details contained herein have been compiled and are offered as a guide for consideration to assist the architect, owner and roofer in an attempt to provide the best roof possible for long, trouble-free service. Responsibility, however, for design of any roofing system, remains with the architect or engineer and building owner. The contents of this manual are subject to change at the discretion of Koppers Company as future developments and experience are achieved.

INDEX

	PAGE NO.
Coal Tar Discussion	3
Coal Tar Bitumen Discussion	3
Koppers Built-Up Roofing Material & System Discussion	4
General Requirements & Special Conditions	5-6
Application: Roofing	7

Built-up Roof Specifications

deck construction	no. of plies	basic spec. no.	
Wood Plank/Plywood	5	1	8
	4	2	
Poured Portland Cement Concrete	4	5	9
	3	7	
Precast Structural Concrete Sections	4	10	10
	3	11	
Gypsum (Poured and Plank) and Lightweight Insulating Concrete	5	12	11
	4	13	
Metal Decks (Insulated)	4	17	12
	3	18	
Water Cooled Roofs and Water Retaining Roofs	4	23	13
	3	24	
Wood Fiber	4	27	14
	3	28	

Roof Application over Dycon Concrete[1]

deck substrate			
Steel Centering	4	50	15-16
	3	51	
Structural Concrete	4	60	15-16
	3	61	
Formboard & Bulb Tees	4	70	15-16
	3	71	

Koppers Multipurpose Membrane (KMM)[2]	**18-19**
Flashing Specifications	**20-21**
Flashing Details	**22-25**
Bonded & Guaranteed Roofing Program	**26-27**

(1) Also see Sweet's 3.4/Kop
(2) Also see Sweet's 7.1/Kop

Coal Tar

Tar is a very familiar word, however, it has different meanings for different people. To many it is any black liquid adhesive or plastic substance; however, it is much more than this. It is a hydrocarbon, meaning it is composed primarily of carbon and hydogen and is therefore an organic compound. Tar is obtained from the "destructive distillation" of coal, primarily bituminous. This means when coal is heated to very high temperatures without contact with air (thus not allowing the combustion of coal and its derivatives) the coal molecules in effect are "cracked" into small molecules (gas), medium molecules (tar), and coke. We see, therefore that the more proper term is coal tar.

Coal tar, through further distillation processes, is refined and separated into products of great commercial usefulness and value:

PITCHES OR BITUMENS—of various consistencies such as roofing material, waterproofing products, protective coatings for metals, masonry, etc.

CREOSOTE—for wood preserving.

CHEMICAL OILS—for use in the manufacture of drugs, dyes, paints, varnishes, cosmetics, plastics, synthetic rubber, etc.

Coal tar is indeed a vital and valuable product that produces materials for many industries in our world of today.

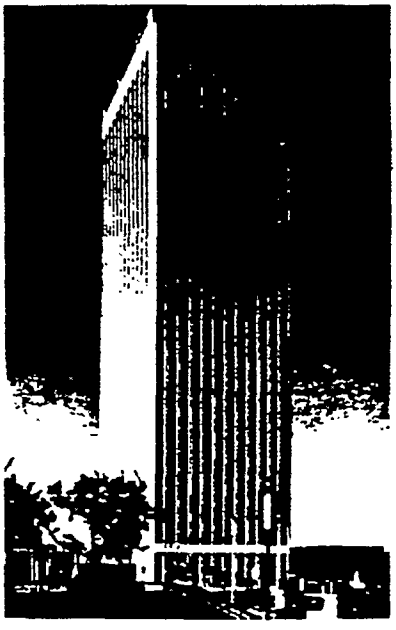

Coal Tar Bitumen

A very valuable tar derivative used in the Roofing/Waterproofing industry is Coal Tar Bitumen. Its value is found in its superb water and corrosive resistance qualities. Coal Tar Bitumen also performs as an excellent adhesive when used in adhering tarred roofing felts together in built-up roofing. These qualities are due to the unique properties that are endowed to Coal Tar Roofing Bitumen by nature.

Without going into a highly technical chemical analysis, it can be most simply stated that Coal Tar Bitumen is a balanced organic compound using the Benzene Ring Molecule as its major building block. This molecule is illustrated at the right, the atoms of the Benzene Ring Molecule. Carbon (C) and Hydrogen (H) have a very strong molecular attraction or bond one to another which will not allow a water molecule to form and therefore be absorbed into the bitumen.

Coal Tar Bitumen systems are inherently resistant to molecular penetration by water. Coal Tar Bitumen Built-Up Roofing Systems are nature's own balanced answer to waterproofing and chemical resistance, especially to water and water-borne chemicals.

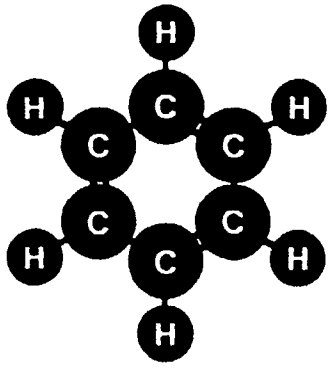



Koppers Coal Tar Bitumen Built-Up Roofing

Materials and System Discussion

Description

Koppers Coal Tar Bitumen built-up roofing systems consist of alternate layers of Koppers Coal Tar Bitumen and Koppers tarred felt, surfaced with a heavy top pouring of Koppers Coal Tar Bitumen into which is embedded an aggregate.

Koppers Coal Tar Bitumen built-up roofing systems are used whenever a roof is exposed to water and/or corrosion, and on all level or low sloped roofs where long, maintenance-free service is required.

Features

Coal Tar Bitumen built-up roofing provides one of the most durable roofing systems known due to its inherent superior waterproofing and weathering characteristics. This is THE time proven roofing system for level and low sloped roofs.

Coal Tar Bitumen provides numerous advantages to an owner, however, the superior performance of coal tar roofing systems in the areas listed below make coal tar roofing systems unique in the roofing industry.

1. Coal Tar Bitumen has natural resistance to water, air and water vapor penetration.

A tight molecular structure enables Coal Tar Bitumen to withstand water penetration and resist oxidation of the roof surface.

2. Another unique feature of coal tar roofing is its self-healing ability.

Alligatoring and hairline cracks common to most materials, eventually cause damage to the roofing membrane. Coal Tar Bitumen has a property known as "cold flow" which automatically corrects these conditions before serious damage takes place. This "cold flow" feature heals small mechanical fractures at normal temperatures.

3. Application improvements.

Because Koppers has expertise in the chemistry of aromatic coal tars, Coal Tar Bitumen was developed with the beneficial features of low fume evolution at application temperatures, thus reducing potential irritation during application.

These features represent significant improvements which are in consort with the aims of government, labor, and industry in the areas of reduced air pollution and improved worker conditions.

Uses

1. All 'dead' level roofs.
2. All water cooled roofs.
3. Low sloped roofs with occasional ponding.
4. Low sloped roofs with retarded drainage.
5. All buildings with level or low sloped roofs that are built for long service life.

Slopes

Koppers recommends that the maximum roof slope be one-half (½) inch per foot for all built-up Coal Tar Bitumen roof systems. Koppers does, however, permit slopes up to two (2) inches per foot at flashings that incorporate tapered cants and for short run crickets or saddles for drainage, provided there is adequate back nailing, and these crickets or saddles do not cover more than 15% of the roof area.

All felts must be backnailed on slopes one-half (½) inch per foot or more. For recommendations on roofing procedures for slopes over ½ inch per foot, consult your Koppers representative.

Underwriters Laboratories

Underwriters Laboratories, Inc. Building Materials Directory, Guide No. (360018) TFJK-Built-Up Roof Covering Materials Lists Koppers Coal Tar Bitumen and tarred felts for use in construction of Class A and B built-up roof coverings.

Additional References: Roof Deck Constructions are listed under U. L. Guide No. (360 RO) TGKX. Roof deck construction materials, such as vapor barriers, insulations, and adhesives are listed under U. L. Guide No. (360 R13) TGYV.

Bonds/Guarantees

Koppers Bonds/Guarantees are available for 5, 10, 15, and 20 year terms. Roof bonds/guarantees cover ONLY the built-up roofing and flashing membrane.

For further details, please refer to Page 26 and 27 of this manual.

Coal Tar Bitumen — Physical Properties

Property	Method of Test	Requirements
Water	ASTM D-95	- 0 -
Specific Gravity 77/77 F (25/25 C)	ASTM D-70	1.22 Min. 1.34 Max.
Softening Point (Cube-in-Water Method)	ASTM D-61	147F-162F
Flash Point (Cleveland Open Cup)	ASTM D-92	248F Min. (120C)
Total Bitumen Soluble In Carbon Disulfide, percent	ASTM D-4	72 Min. 85 Max.
Distillation Test Total Distillate by weight, given in percent: — 0 to 315C (32 to 599F) — 0 to 360C (32 to 680F)	ASTM D-20	— 0.0 Max. 5.0 Max.

General Requirements and Special Conditions

Roof Structure System

In any building the performance of the Built-Up Roofing will be affected to some degree by all of the parts of the roof structure system as well as the inside and outside atmospheric environment. Each component should be investigated for its compatibility with each of the others. The roof structure system may include any or all of the following:

Outside Air Conditions
Roofing System
Peripheral Details (Flashings)
Insulation (if present)
Vapor Barrier (if present)
Structural Deck including sub purlins (supports)
Structural Framing
Air Space (if present)
Ceiling (if present)
Interior Air Conditions

You will find information in this manual pertaining to materials and application methods other than for built-up roofing. They are offered to assist the designer in establishing their normal position in the roof structure system. They should not be construed as part of the built-up roofing system, as endorsement, nor as part of the designated specifications other than to establish a suitable roofing base in the roof structure system.

The proper design, specification and positioning of the various components of the roof structure system is the responsibility of the building owner or his designer. Any subsequent failures, due to either the installation or lack of installation will not be Koppers responsibility.

Decks

The deck is the base over which the built-up roofing, or insulation and built-up roofing is applied. Where the term deck is used in this manual without reference to insulation, it shall designate the surface over which roofing is to be applied. All decks shall be clean, smooth, dry, rigid and free of debris. Any deck defect shall be corrected before application of roofing. All decks shall be installed in accordance with the deck manufacturer's specifications and shall be in compliance with Koppers General Requirements.

In approving any deck as satisfactory to receive a Koppers roof, only the deck surface is accepted. It is the responsibility of the building designer and the deck manufacturer to provide for expansion and contraction in a manner that will provide a stable base for the roofing; for support of maximum anticipated loads; secure attachments vertically and laterally, and the selection of the deck material and construction details including their ability to contain bitumens.

(KOPPERS WILL NOT ASSUME RESPONSIBILITY FOR DECK DEFECTS ON KOPPERS ROOFS, OR BITUMEN SEEPAGE.)

The placing of conduits, bolt heads, etc., above the roof deck and below the roofing membrane is not recommended.

All projections or openings in the deck should be completed prior to the application of the roofing.

Optimum adhesion to the deck is necessary for good roof performance. Where Koppers Bitumen or steep asphalt is used for adhesion, questionable decks may be tested for dryness and adhesion by pouring one pint of the bitumen, heated to application temperature, over a representative area or areas of the deck. The deck is not satisfactory if the bitumen foams or bubbles, or upon cooling to ambient temperature may be stripped clean of the deck.

Conditions of surface to Receive Roofing

All surfaces must be dry, reasonably smooth, clean, rigid and free from debris, loose materials, projections and holes which might cause rupture of the membrance.

Metal Decks: Decks of this type must also be free from loose rust and oily substances. Deflection should not exceed 1/240 of the clear span and conform to Factory Mutual requirements.

Note: When applying insulation and roofing over a perforated or acoustical type metal deck, it is recommended that a vapor barrier be installed prior to the application of the insulation or that a base sheet set in steep asphalt be utilized as the first ply of Built-Up Roofing. This is to reduce the possibility of Bitumen drippage.

Poured Portland Cement Concrete, Precast Structural Concrete Sections, Poured Gypsum, Lightweight Insulating Concrete: Decks of these types with inclines of one-half (½) inch per foot or more shall permit nailing, or treated nailing strips must be set in the deck and installed prior to roofing. Where insulation is specified, nailing strips may be secured to the deck surface of the insulation. These strips should be spaced not more than three (3) feet apart and placed up and down and not across the slope of the roof. Roof deck shall be properly graded to outlets.

Precast Decks: (concrete, gypsum, wood fiber) Decks of these types, whether grouted or not, shall be caulked with Koppers Flashing Cement which shall be applied so that the top surface is level and smooth. Felt stripping four (4) to six (6) inches wide set in a troweling of the cement is recommended to assist in leveling uneven joints and bridge the joint openings thus providing a better surface for the roofing materials.

Wood Plank/Plywood: Wood shall be well seasoned, dry and preferably treated. End joints shall have adequate bearing. Loose or void knot holes, large cracks, etc., shall be covered with sheet metal.

Lumber shall be a minimum of 1" nominal thickness.

Plywood shall be a minimum of ½" thickness.

Lightweight Insulating Decks

Lightweight insulating decks include lightweight aggregate concrete (20 to 40 lbs. per cu. ft. oven dry density); foamed concrete, gypsum and thermosetting asphaltic decks. Except for Dycon Concrete, lightweight insulating deck systems must be capable of venting excess water vapor to the underside. Koppers will not accept these lightweight insulating decks to be placed over vapor barriers, poured concrete substrates, unvented metals, or any type of base which will not permit these materials to vent from the underside. It is necessary to prevent a water vapor pressure build-up under the built-up roofing. Occasional, or spot vents through the roofing as the only venting method are not satisfactory substitutes for underside or continuous vented systems.

In addition, lightweight insulating decks shall have sufficient cohesive strength to provide firm attachment of the roofing to the deck and framing to prevent wind uplift damage or blow-offs. Nailable decks must be capable of developing at the very minimum, a 40 pound nail pull-out or withdrawal strength. If the materials do not achieve this value, additional fasteners will be required over and above those quantities described in the ensuing specification (standard is approximately 100 fasteners per square) to achieve a minimum attachment standard of 40 lb. per square foot. Koppers will not be responsible for failure of the insulating deck to remain integral or for disbonding of the roofing from the surface of the deck.

Provisions should be made wherever possible to provide additional venting such as notched wood perimeter nailers, etc., in conjunction with the venting from the

underside of the deck. If board type insulation is to be applied over a lightweight insulating deck, provisions must be made between the fill and the board insulation to prevent fill moisture from affecting the insulation and roofing.

Material Protection

It is the responsibility of the roofing contractor to protect all roll roofing materials and roof insulation from ground or construction moisture and weather before and during construction.

Attachment

Maximum adhesion or secure attachment of all components in the roofing assembly is necessary for satisfactory long term performance of the roofing membrane. Adhesive and/or fastener quantities specified by the manufacturer must be capable of passing a minimum uplift resistance of 40 pounds per square foot (psf).

When Building Code requirements dictate a higher uplift resistance than our minimum requirement, additional fasteners or adhesive will be required over and above the quantities described in the ensuing specifications.

Solid mopping has been found to provide an uplift resistance in excess of 120 psf.

Strip mopping, as suggested in the specifications in this manual, has been found to provide an uplift resistance in excess of 60 psf.

When nails or fasteners are used, they must be nailed through flat tin disks or have sufficiently large heads to prevent fracture or puncture through the roofing felts.

The following are the names of some manufacturers who provide nail and/or fastening devices for use with built-up roofing:

E/S Products, Inc.
New Rochelle, NY
Simplex Nail & Manufacturing Corp.
Americus, GA
Independent Nail Corp.
Bridgewater, MA
E. G. Building Fasteners Corp.
New York, NY

Koppers will not be responsible for any damage caused by or the result of unsatisfactory attachment.

For further information contact your Koppers representative.

Expansion Joints (Building)

Since all materials expand and contract due to temperature and/or moisture, the use, location, and design of building expansion joints, especially in the roof structure system, should be taken into consideration at the time of original building design.

Although provisions for adequate expansion joints are the responsibility of the building designer, Koppers offers the following recommendations for the protection of the roofing system against splits caused by expansion and contraction of the building. Building expansion joints should be installed.

1. On large roof areas at least 200 feet in each direction.
2. At all places where the structural supports and roof assembly change direction.
3. Where type of adjoining deck materials change.

Where control or expansion-contraction joints are provided in the structural steel, deck material, or deck system, provisions must be made for continuation of this relief through the built-up roofing system. Koppers realizes that in a climate controled building there may be little or no expansion AFTER the building is in use, however, building expansion joints are still recommended based upon the following points:

1. During construction the building will not be under a steady state temperature/humidity condition so that thermal and moisture movement can be sufficient to fracture the roofing.
2. If no building expansion joint is provided, the owner must keep the building at the steady state temperature and humidity condition at all times, as holiday shut-downs can fracture the roofing due to the movement of the roof system resulting from temperature/humidity variation.
3. If the occupancy is fairly large, the sudden entrance on a rainy day of many rain-soaked employees may cause moisture movement in the roof structure system which can fracture the roofing.

Water Stops (Temporary Protection)

Water stops consisting of two (2) plies of tarred felt and mopping of Coal Tar Bitumen for flat roofs or asphalt felt and asphalt for steep roofs extending onto the deck at least 6" and 4" on top of the insulation, shall be applied at the end of each day's work over exposed edges of insulation.

These temporary protective measures must be removed cleanly when work is resumed to prevent blocking moisture vapor movement to vented edge details.

Cut Offs (Permanent Installation)

Venting of roof insulation at walls, curbs, eaves, etc. is recommended for all but a few special roof structures. Therefore, cut-offs should not be installed at edges of insulation adjoining these areas for venting purposes.

Cut-offs may be installed however, provided they are constructed to run in one direction continuously to vented edges and provided no section of the roofing is isolated or blocked from venting.

Koppers Steep Roofs

For detailed specifications regarding KMM Aluminum Roofs, smooth surface asbestos roofs, or steep asphalt and gravel, roofs, consult your Koppers representative or contact Koppers Company, Inc., Pittsburgh, PA.

Vapor Barrier

Vapor barriers are normally used where the heat flow direction and/or humidity within the building, during any climate or occupancy cycle, might cause the dew point or condensation to occur under the built-up roofing within the insulation chamber. It is important that the vapor barrier, when installed, provide a continuous seal, (including ventilators, skylights, peripheral walls, and other terminations) from the source of the water vapor.

Insulation

Insulations come in varying thicknesses and sizes. Should the manner of attachment as suggested conflict with that specified by the individual insulation manufacturer, the insulation manufacturers specifications shall be followed and in addition, shall be in compliance with Koppers General Requirements.

Good roofing practice dictates that the following points be considered when specifying board type roof insulation.

1. The roofing insulation must be kept dry at all times. It must be of a type approved by Koppers for use with a Koppers built-up roof. It should only be applied over a deck complying with all of Koppers General Requirements.
2. If the deck slope is one-half (½) inch per foot or more the insulation must be able to retain nails or wood nailers must be installed perpendicular to the slope at each course of insulation.

   Spacing of nailers must be such that the insulation fits snugly with the nailers but must not be force fitted.
3. No more insulation shall be laid at any one time than can be protected by bitumen and felt in case of sudden weather changes.
4. Edges of insulation shall be brought closely together and shall not be forced into place. Where insulation joins vertical surfaces, the insulation shall be cut in a neat manner allowing approximately one-half (½) inch clearance.
5. When more than one (1) layer of insulation is used, joints in each layer shall not coincide. All layers shall be parallel to preceding layers.

Wood Nailing Strips

All non-nailable decks require wood nailing strips at eaves, edges, walls, roof openings, etc. for proper securement of metal flanges. Nailers must be securely and firmly attached to the deck or through to its supporting members. Nailers shall extend not less than 1" beyond the apron or flange.

Roofing felts for all decks having a slope of ½" per foot or more must be back nailed and therefore non-nailable decks must be furnished with treated wood nailing strips treated with a material compatible with bituminous roofing.

Cold Storage and Freezer Buildings

Koppers will not bond its built-up roofing over these structures if insulation or insulation and vapor barrier is installed over the deck unless there is an adequately ventilated air space between the deck and insulated refrigerated area.

For procedures on non-bonded built-up roofing applications or KMM installation, consult a Koppers representative or Koppers Company, Inc., Pittsburgh, PA.

Temporary Roofing

Temporary roofing specifications are available for all Koppers Coal Tar Bitumen Built-Up Roofing Systems. Consult your Koppers representative for recommended specifications over various type decks for temporary roof construction.

Application: Roofing

Application of Bitumens

Recommended Weights per 100 sq. ft. (for estimating purposes only)

	Average Interply	Top Coating
Koppers Coal Tar Bitumen	25 lbs.	75 lbs.
Steep Asphalt	23 lbs.	60 lbs.

Average interply weights are based on long years of experience in good roofing practice, and take into account a reasonable variation in the amount of bitumen absorbed in different substrates, and the type of specification. Moppings of bitumen between felts shall be continuous.

Felt shall not touch felt. The top pouring is most important, it must be thorough and uniformly covered with specification aggregate embedded into the bitumen **While the Bitumen is Still HOT.**

Recommended Temperature Limitations:

	Temp. °F Heated Application		
	(max.)	(min.)	(recom.)
Koppers Coal Tar Bitumen	400	300	375
Steep Asphalt	475	350	425

When roofing bitumens are overheated their waterproofing qualities are greatly reduced, and at the same time the volume of fuming is increased. In order to achieve the maximum benefits of low fuming and unequaled waterproofing performance, it is imperative that Koppers Coal Tar Bitumen be heated within the temperature limitations listed above. Close supervision of heating is also good roofing practice for all bitumens.

If heat is desired during a holding period at the jobsite while material is not being drawn off and replenished as under normal usage, kettle temperature should be reduced and not permitted to exceed 350°F for Koppers Coal Tar Bitumen or 425°F for steep asphalt. The kettle should be full lid closed. These temperatures are applicable to job conditions and do not apply to holding or storage in kettles in excess of 4 hours. If bitumen is not to be used for periods over 4 hours, the kettle should be shut off.

Koppers Coal Tar Bitumen may be contained in 1000 gal. or greater capacity heated and automatically controlled closed vessel tankers at 375°F for periods, not exceeding 96 hours.

Application of Felt

Plies of felt must be laid shingle fashion.

Where a water flow direction exists, felts should be applied so that the direction of flow is not against the laps. Broom or press all plies of felt into the hot bitumen and lay without wrinkles, buckles or kinks, so that the finished roof is free of pockets or blisters. Each felt ply shall be completely covered with a complete mopping of bitumen.

The number of plies are controlled by varying widths of the edge laps. Four-ply (4) roofing, for example, is achieved by lapping each ply approximately twenty-seven and one-half (27½) inches or ¾ of the width of the roll.

Koppers felts are marked at the factory with lap lines for this purpose. Except as specifically provided for in Koppers specifications, application of felt lapping methods other than shingle fashion will not be permitted.

When beginning a membrane roofing installation, appropriate width starting strips of felt shall be used at the starting point to achieve the specification ply build-up at that point so that successive felt applications will produce the ply requirements. Overlap ends of all connecting plies of felt (end laps) not less than 10 inches. End stripping or taping of these laps is not permitted.

Koppers recommends that all felts be backnailed when the slope of the deck is one-half (½) inch per foot or more.

Application of Koppers Bitumen and Aggregate Surface

The final application of Koppers Roofing is a triple weight application of Koppers Coal Tar Bitumen (approximately 75 lbs./sq.) into which is distributed an approved aggregate while the Bitumen is still hot.

Benefits of aggregate surfacing

1. Protection from foot traffic of other trades during construction and afterwards for routine roof maintenance.
2. Weight as additional protection for wind uplift.
3. Reduced surface temperature.
4. Even flow of water to the drains.
5. Fire protection from burning brands.
6. Protect bitumen from the actinic rays of the sun.
7. Most important—by using an aggregate surface, an additional 75 lb./sq. of Coal Tar Bitumen (the waterproofing agent) is included in the installation.

The application of Koppers Coal Tar Bitumen and aggregate must be done at the time the felts are applied; except in periods of hot, dry weather when the top surfacing may be delayed overnight.

When the specifier desires glaze coating and/or all work to be completed the same working day, he shall be responsible to so state this requirement in his specifications.

The aggregate surfacing must be applied into the top pouring while the bitumen is still hot so that a uniform layer will be embedded and adhered. The completed roof assembly will have a uniform aggregate surface. Depending on slag weights in certain parts of the country 400 lbs. of slag per square may be required. Occasionally on well applied roofs, small black globes known as "raspberries" or "blackberries" will form in the roof surface. These are not detrimental to the roof.

Aggregate Surfacing

The aggregate to be used should meet the ASTM Specification D1863-64. The basic requirement for this aggregate are as follows:

Sieve Size	Total Passing, Percent
¾"	100
½"	90-100
⅜"	4-70
No. 4	0-15
No. 8	0-5
Dust, max. pct.	0.5
Moisture, max. % crushed stone and gravel	0.5
Crushed roofing slag	5.0
Unit weight (loose) min. lb. per cubic ft.	60

Cold Weather Application

When roofing is applied at temperatures below 45°F, special precautions must be taken to insure the satisfactory performance of the finished roof. Before applying roofing, moisture, ice, snow, surface water, etc., must be removed from the deck.

Hot applied bitumens tend to congeal rapidly in cold weather. Extra care must be taken to set insulation or roofing as quickly as possible while the bitumen is still hot.

Do not heat bitumens above the maximum temperature limit listed above to compensate for rapid chilling. Insulated containers along with carefully timed material delivery methods, must be employed.

Base Sheet Alternate

When substituted for the first ply in a solid mop application specification, the Base Sheet shall be embedded in a solid mopping of Koppers Steep Asphalt followed by thorough brooming to eliminate air pockets, wrinkles, fish mouth, buckles, etc. The remaining two (2) or three (3) plies of Tarred Felt shall be solid mopped with Coal Tar Bitumen in accordance with the specification.

When substituted in a nailing application specification, the Base Sheet may be used in lieu of the two nailed No. 15 tarred felts. When rosin sized or sheathing paper is a part of the original specification it shall remain and be applied beneath the Base Sheet. Edge laps shall be 4" and end laps shall be 6". The nailing pattern for the Base Sheet shall be 9" on center through the lap and 2" from the edge lap and stagger-nailed down the center of each sheet on 9" centers. (Note: This is approximately 100 nails per square.)

When specifying the Base Sheet alternate use of the designation be as a subscript to the specification number. For example, when substituting base sheet in a roofing specification over Metal Deck—designate as 17wlbs.

Note:

If Koppers Asphalt Coated Base Sheet (ASTM D-2626) is substituted for the first ply (plies) of the Coal Tar Bitumen roofing specifications, it must not be left exposed or used as a work surface prior to roofing completion. Good roofing practice dictates that the total roofing membrane be complete the same day.

Coal Tar Bitumen Built-up Roof Specifications

deck construction:

Wood Plank/ Plywood

SLOPE • See pg. 4
SURFACE • Aggregate

For recommendations on wood and wood treatment, contact: Koppers Company, Inc., Forest Products Division, Lumber Sales Dept., 750 Koppers Bldg., Pittsburgh, PA 15219

Spec. No. 1—5 ply
Spec. No. 2—4 ply

Spec. No. 1 wi—4 ply
Spec. No. 2 wi—3 ply
wi: with board type insulation

Spec. No. 1 wiv—4 ply
Spec. No. 2 wiv—3 ply
wiv: with board type insulation and vapor barrier

Treated wood should be used where a vapor barrier is required, see Page 6.

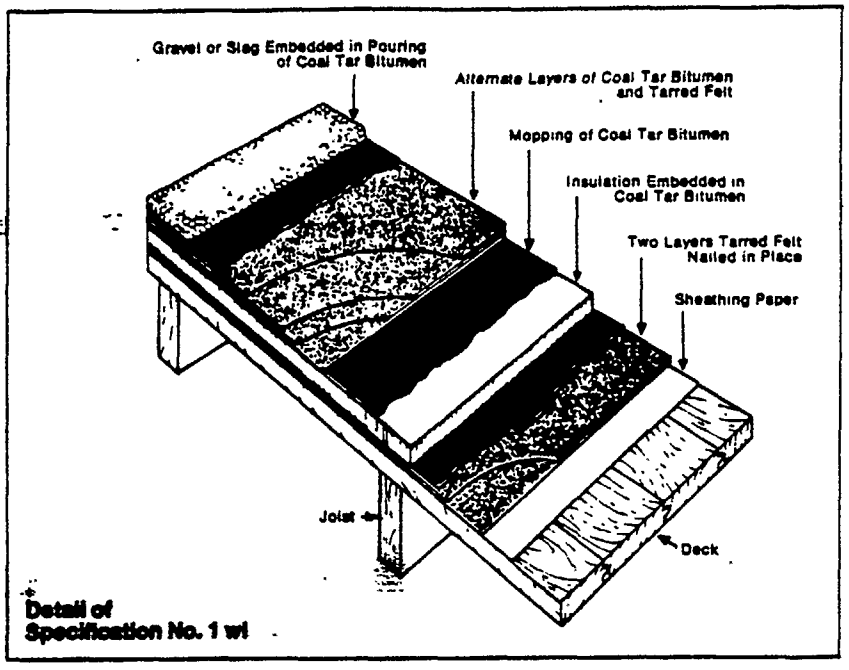

Detail of Specification No. 1 wi

Hot Coal Tar Bitumen should never be applied directly to a wood deck. Sandwiched between the heat from above and the heat from below, such material finds its way through the boards into the building. Good practice demands the cushioning and blotting effect of a layer of sheathing paper followed by layers of dry felt. Shiplap and square edge boards should be avoided where possible. If the underside of the roof deck is exposed to air pressure created from open doors or windows, tongue-and-grooved lumber should be used.

PROCEDURE

Select clauses as required. *Optional clauses in italic.*

Copy in color denotes built-up roofing specification

Condition of Surface to Receive Roofing

See Page 5.

Material Quantity Requirements

See Page 7.

Preparation Below Insulation

1. The wood roof deck shall be covered with one (1) layer of approved rosin-sized sheathing paper weighing approximately five (5) pounds per one hundred (100) square feet. The sheathing paper shall be lapped two (2) inches and secured to the deck by occasional nailing.

2. Two full thicknesses of Tarred Felt shall be laid over the entire surface, lapping each sheet nineteen (19) inches over the preceding sheet and nailing the sheets in place.

Application of Vapor Barrier Below Insulation

Note: When vapor barrier is required, use these procedures in addition to **Preparation Below Insulation** noted above.

Lay over the entire surface two (2) full thicknesses of Koppers Tarred Felt, lapping each sheet nineteen (19) inches over the preceding sheet—mopping with Coal Tar Bitumen the full nineteen (19) inches so that in no place shall felt touch felt.

Application of Insulation

1. Mop the entire surface with a uniform coating of Coal Tar Bitumen into which, while hot, firmly embed the insulation.

For application of roofing materials over insulation follow Application of Roofing Materials procedure for concrete decks. Page 9.

Application of Roofing Materials Directly on Wood

1st. Lay one ply of rosin sized or other approved sheathing paper weighing not less than five (5) lbs. per 100 square feet lapping each sheet two (2) inches and nail sufficiently to hold in place.

2nd. Spec. No. 1 Spec. No. 2

Install two (2) plies of Koppers Tarred Felts over entire surface lapped nineteen (19) inches. Nail on eight and one-half (8½) inch centers one (1) inch from edge lap. (Note: This is approximately 100 nails per 100 sq. ft.) Nail shanks are to be of required length for maximum withholding power.

3rd. Spec. No. 1

Apply three (3) plies of Koppers Tarred Felt lapping plies twenty-four and two-thirds (24⅔) inches. Where slope of deck is one-half inch per foot or more, nail each sheet of felt six (6) inches from the back edge on twenty-four (24) inch centers. All laps shall be mopped with Coal Tar Bitumen the full twenty-four and two-thirds (24⅔) inches, so that in no place shall felt touch felt.

3rd. Spec. No. 2

Apply two (2) plies of Koppers Tarred Felt, lapping plies nineteen (19) inches. Where slope of deck is one-half (½) inch per foot or more, nail each sheet six (6) inches from the back edge on twenty-four (24) inch centers. All laps shall be mopped with Coal Tar Bitumen the full nineteen (19) inches so that in no place shall felt touch felt.

4th. Pour over the entire surface of the roofing membrane, a uniform coating of Coal Tar Bitumen into which, while hot, embed not less than four hundred (400) pounds of gravel or three hundred (300) pounds of slag for each one hundred (100) square feet.

General Requirements on pages 5, 6 and 7 and Detail Specifications on pages 20 through 25 are a part of this specification and must be adhered to where applicable.

deck construction:

Poured Portland Cement Concrete

SLOPE • See pg. 4
SURFACE • Aggregate

Spec. No. 5—4 ply
Spec. No. 7—3 ply

Spec. No. 5 wi—4 ply
Spec. No. 7 wi—3 ply
wi: with board type insulation

Spec. No. 5 wiv—4 ply
Spec. No. 7 wiv—3 ply
wiv: with board type insulation and vapor barrier

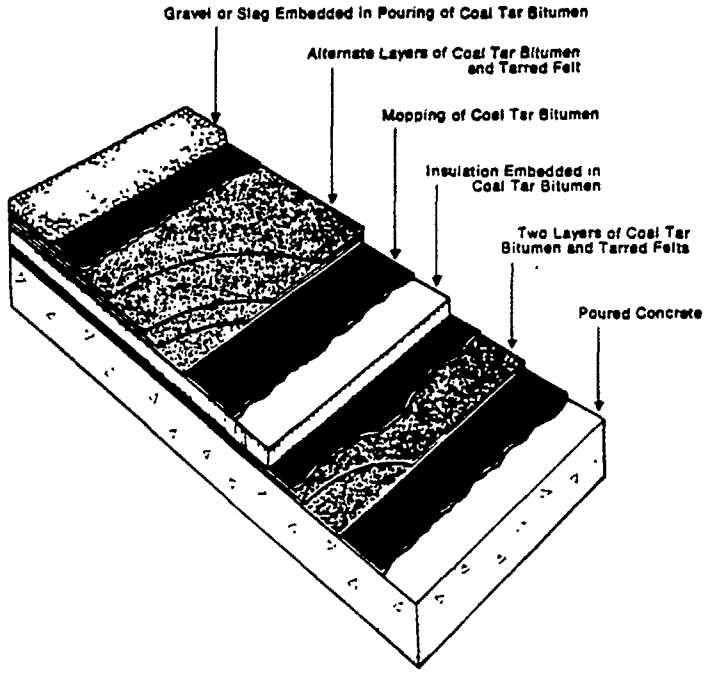

Detail of Specification No. 5 wiv

Poured concrete decks sometimes cause trouble because the built-up roofing is laid before the deck is thoroughly dry. When this happens the result is a blistered and buckled membrane or, just as serious, the insulation curls and makes an unsatisfactory job. The roofing contractor, backed by the architect, should insist on a thoroughly dry deck before beginning work. He should also see to it that the deck is free of loose sand, frozen scale and other foreign matter. Projections should be removed, low points filled with cement grout or other suitable material, and all cracks pointed up.

PROCEDURE

Select clauses as required. *Optional clauses in italic.*
Copy in color denotes built-up roofing specification

Condition of Surface to Receive Roofing

See Page 5.

Material Quantity Requirements

See Page 7.

Application of Vapor Barrier Below Insulation

1. Apply a uniform coating of Coal Tar Bitumen to the deck.

2. Lay over the entire surface two (2) full thicknesses of Koppers Tarred Felt, lapping each sheet nineteen (19) inches over the preceding sheet—mopping with Coal Tar Bitumen the full nineteen (19) inches so that in no place shall felt touch felt.

3. Extend all plies of felt up vertical surfaces and cut off at height of insulation.

Application of Insulation

Apply a uniform coating of Coal Tar Bitumen over the entire surface into which, while hot, embed the insulation. If there are two (2) layers of insulation mop the entire surface of the first layer with Coal Tar Bitumen into which, while hot, embed the second layer of insulation.

Application of Roofing Materials

1st. Mop deck (or insulation—as applicable) completely with Coal Tar Bitumen.

2nd. Spec. No. 5

Apply over the entire surface, four (4) plies of Koppers Tarred Felt, lapping plies twenty-seven and one-half (27½) inches. Mop solidly between each 27½ inch lap with Coal Tar Bitumen so that in no place shall felt touch felt.

2nd. Spec. No. 7

Apply over the entire surface three (3) plies of Koppers Tarred Felt, lapping plies twenty-four and two-thirds (24⅔) inches. Mop solidly between each 24⅔ inch lap with Coal Tar Bitumen so that in no place shall felt touch felt.

Where slope of deck is one-half (½) inch per foot or more and deck permits nailing, nail along back or upper edge of each sheet on twenty-four (24) inch centers. Where deck does not permit nailing, nailing stripe are required and each sheet nailed along back or upper edge at spacings to assure penetration of nailers.

3rd. Pour over the entire surface of the roofing membrane a uniform coating of Coal Tar Bitumen into which, while hot, embed not less than four hundred (400) pounds of gravel or three hundred (300) pounds of slag for each one hundred (100) square feet.

General Requirements on pages 5, 6 and 7 and Detail Specifications on pages 20 through 25 are a part of this specification and must be adhered to where applicable.

Specifications (continued)

deck construction:

Precast Structural Concrete Sections

SLOPE • See pg. 4
SURFACE • Aggregate

Spec. No. 10—4 ply
Spec. No. 11—3 ply

Spec. No. 10 wi—4 ply
Spec. No. 11 wi—3 ply
wi: with board type insulation

Spec. No. 10 wiv—4 ply
Spec. No. 11 wiv—3 ply
wiv: with board type insulation and vapor barrier

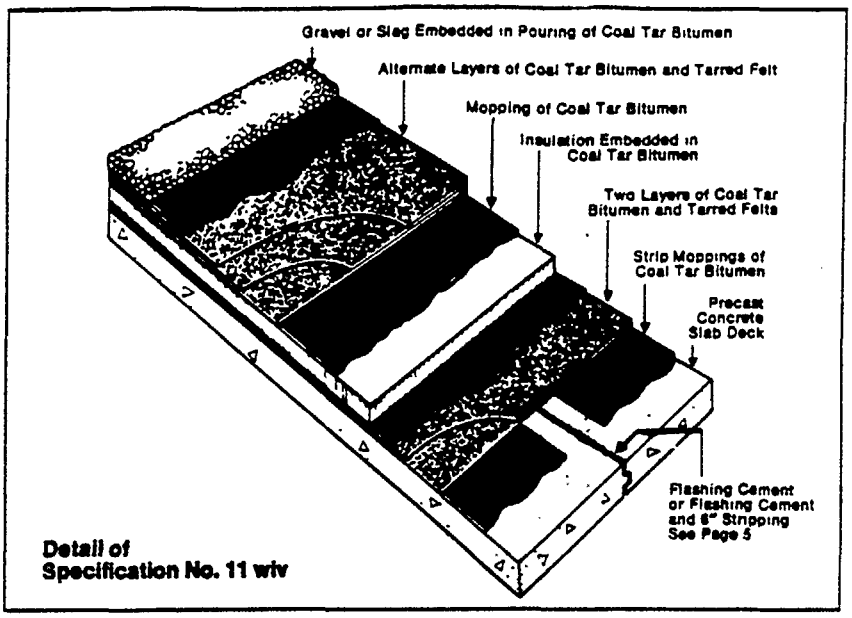

Detail of Specification No. 11 wiv

Precast concrete structural sections demand the same recommendations as poured concrete decks, although the presence of moisture, due to insufficient drying time, is not likely. If the contractor finds one or more slabs resting unevenly, with edges projecting above the surface, this should be corrected by resetting or leveling off. Open-cell aggregate is not acceptable for filling or leveling low areas. All joints, grouted or not, should be caulked with trowel-grade asphaltic plastic cement. Slab sides and ends should be square, rest firmly and evenly on supporting members, and be installed to prevent lateral and vertical movement.

PROCEDURE

Select clauses as required. *Optional clauses in italic.*

Copy in color denotes built-up roofing specification

Condition of Surface to Receive Roofing
See Page 5

Material Quantity Requirements
See Page 7.

Application of Vapor Barrier Below Insulation

1. *On precast concrete slab or tile deck,* strip mop with Coal Tar Bitumen up to four (4) inches from the edge of each joint. Not less than 30% of the surface must be mopped, at a min. rate of 10 lbs. per 100 square feet.

2. Lay over the entire surface two (2) full thicknesses of Koppers Tarred Felt, lapping each sheet nineteen (19) inches over the preceding sheet—mopping with Coal Tar Bitumen the full nineteen (19) inches so that in no place shall felt touch felt.

3. Extend all plies of felt up vertical surfaces and cut off at height of insulation.

Application of Insulation:

Over Vapor Barrier. Apply a uniform coating of Coal Tar Bitumen over the entire surface into which, while hot, embed the insulation. If there are two (2) layers of insulation (e.g. as required for pre-stressed concrete sections) mop the entire surface of the first layer with Coal Tar Bitumen into which, while hot, embed the second layer of insulation.

Over Deck. On precast concrete slab or tile deck, strip mop with Coal Tar Bitumen up to four (4) inches from the edge of each joint. Not less than 30% of the surface must be mopped, at a minimum of 10 lbs. per 100 square feet. While hot, embed the insulation. If there are two (2) layers of insulation (e.g. as required for pre-stressed concrete sections) mop the entire surface of the first layer with Coal Tar Bitumen into which, while hot, embed the second layer of insulation.

For application of roofing materials over insulation follow Application of Roofing Materials procedure for concrete decks, Page 9.

Application of Roofing Materials

1st. Each slab shall be spot or strip mopped with Coal Tar Bitumen, keeping Bitumen mopping back at least four (4) inches from all edges of each slab joint. Not less than 30% of the surface must be mopped. When applying over insulation, mop insulation completely with Coal Tar Bitumen.

2nd. Spec. No. 10

Apply over the entire surface four (4) plies of Koppers Tarred Felt, lapping plies twenty-seven and one-half (27½) inches. Mop solidly between each 27½ inch lap with Coal Tar Bitumen so that in no place shall felt touch felt.

2nd. Spec. No. 11

Apply over the entire surface three (3) plies of Koppers Tarred Felt, lapping plies twenty-four and two-thirds (24⅔) inches. Mop solidly between the 24⅔-inch lap with Coal Tar Bitumen so that in no place shall felt touch felt.

Where slope of deck is one-half (½) inch per foot or more and the deck permits nailing, nail along back or upper edge of each sheet on a maximum of twenty-four (24) inch centers. Where deck does not permit nailing, nailing strips shall be installed and each sheet nailed along back or upper edge at spacings to assure penetration of nailers.

3rd. Pour over the entire surface of the roofing membrane a uniform coating of Coal Tar Bitumen into which, while hot, embed not less than four hundred (400) pounds of gravel or three hundred (300) pounds of slag for each one hundred (100) square feet.

General Requirements on pages 5, 6 and 7 and Detail Specifications on pages 20 through 25 are a part of this specification and must be adhered to where applicable.

Specifications (continued)

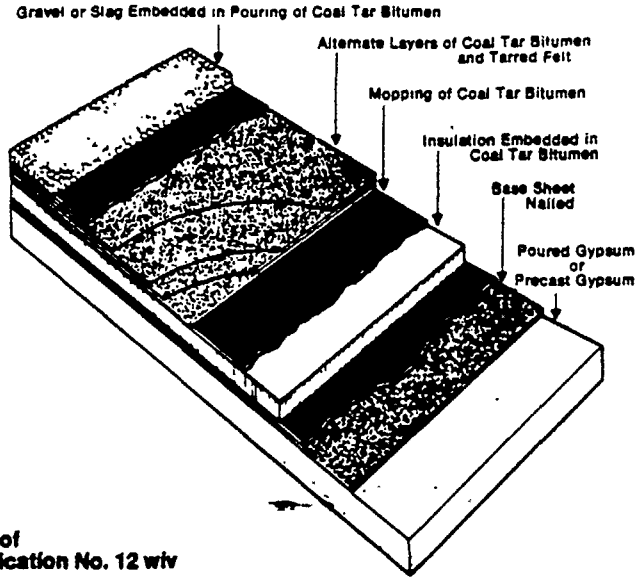

Detail of Specification No. 12 wiv

The same recommendations applying to precast concrete slabs apply to precast gypsum slabs and gypsum metal bound planks. All uneven slabs should be reset or leveled off so that the roof will be laid on a flat and even surface, free from projections and low areas. Because these slabs are precast, the possibility of a high moisture content being present is more remote than in the poured gypsum roof or lightweight insulating concrete roof deck. Poured gypsum decks sometimes cause trouble because the built-up roofing is laid before the deck is thoroughly dry. When this happens the result is a blistered and buckled membrane, or, just as serious, insulation curls and makes an unsatisfactory job. The roofing contractor, backed by the architect, must insist on a thoroughly dry deck before beginning work. He should also see to it that the deck is free of loose sand, frozen scale and other foreign matter. Projections should be removed, low points filled with cement grout or other suitable material, and all cracks pointed up.

deck construction:

Poured Gypsum
Precast Gypsum

Lightweight Insulating Concrete

SLOPE • See pg. 4
SURFACE • Aggregate

Spec. No. 12—5 ply
Spec. No. 13—4 ply

Spec. No. 12 wi—4 ply
Spec. No. 13 wi—3 ply
wi: with board type insulation

Spec. No. 12 wiv—4 ply
Spec. No. 13 wiv—3 ply
wiv: with board type insulation and vapor barrier

See page 5 for Lightweight Insulating Decks

Thermosetting Asphaltic Concrete:

Base sheet must be used as first ply—see page 7.

PROCEDURE

Select clauses as required. *Optional clauses in italic.*

Copy in color denotes built-up roofing specification

Condition of Surface to Receive Roofing

See Page 5.

Material Quantity Requirements

See Page 7.

Application of Membrane Below Insulation

1. Apply over entire surface one (1) ply of Koppers coated base sheet, lapping each sheet four (4) inches over preceding sheet and nailing at lap no less than nine (9) inches and stagger nailed down center of each sheet on eighteen (18) inch centers.

2. Extend plies up vertical surfaces and cut off at height of insulation.

For vapor barrier provisions contact your Koppers Representative.

Application of Insulation Over Membrane (or Deck)

Apply a uniform coating of Coal Tar Bitumen over the entire surface into which, while hot, embed the insulation. If there are two (2) layers of insulation mop the entire surface of the first layer with Coal Tar Bitumen into which, while hot, embed the second layer of insulation.

For application of roofing materials over insulation follow Application of Roofing Materials procedure for poured concrete, Page 9.

Application of Roofing Materials to Deck

1st. Install two (2) plies of Koppers Tarred Felt over entire surface lapped nineteen (19) inches with approved nails. Nail on eight and one-half (8½) centers one (1) inch from edge lap. (Note: This is approximately 100 nails per 100 sq. ft.).

Alternate: *Apply over entire surface one (1) of Koppers coated base sheet, lapping each sheet four (4) inches over preceding sheet and nailing at lap no less than nine (9) inches, and stagger nailed down center of each sheet on eighteen (18) inch centers.*

2nd. Spec. No. 12

Apply three (3) plies of Koppers Tarred Felt, lapping plies twenty-four and two-thirds (24⅔) inches. Where slope of deck is one-half (½) inch per foot or more, nail each sheet of felt six (6) inches from the back edge on twenty-four (24) inch centers. All laps shall be mopped with Coal Tar Bitumen the full twenty-four and two-thirds (24⅔) inches, so that in no place shall felt touch felt.

2nd. Spec. No. 13

Apply two (2) plies of Koppers Tarred Felt, lapping plies nineteen (19) inches. Where slope of deck is one-half (½) inch per foot or more, nail each sheet six (6) inches from the back edge on twenty-four (24) inch centers. All laps shall be mopped with Coal Tar Bitumen the full nineteen (19) inches so that in no place shall felt touch felt.

3rd. Pour over the entire surface of the roofing membrane a uniform coating of Coal Tar Bitumen into which, while hot, embed not less than four hundred (400) pounds of gravel or three hundred (300) pounds of slag for each one hundred (100) square feet.

General Requirements on pages 5, 6 and 7 and Detail Specifications on pages 20 through 25 are a part of this specification and must be adhered to where applicable.

Specifications (continued)

deck construction:

Metal Decks
(Insulation Required)

SLOPE • See pg. 4
SURFACE • Aggregate

Spec. No. 17 wi—4 ply
Spec. No. 18 wi—3 ply
wi: with board type insulation

Spec. No. 17 wiv—4 ply
Spec. No. 18 wiv—3 ply
wiv: with board type insulation and vapor barrier

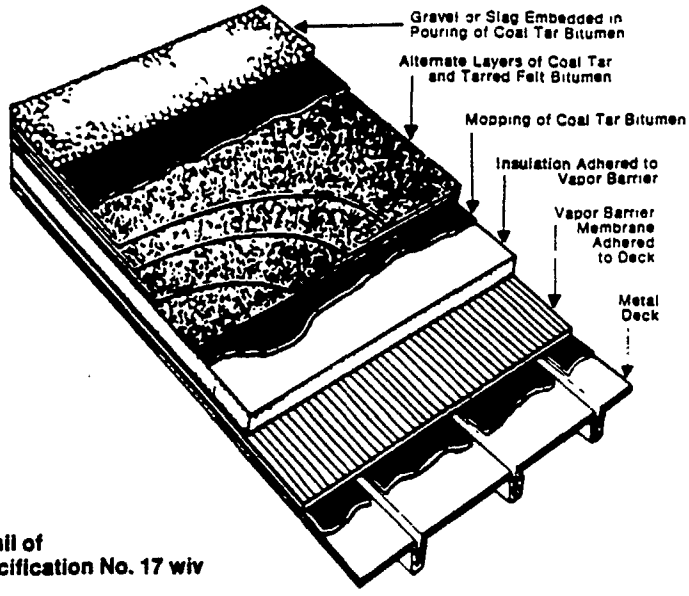

Detail of Specification No. 17 wiv

It is absolutely necessary to install board type insulation on a metal deck before the built-up roofing is applied.

A metal deck must be clean, smooth, and properly anchored to the steel purlins and all joints correctly lapped and fastened.

Type of metal deck, flute opening and various other factors determine the type and thickness of insulation required. Consult your Koppers representative for recommendations.

Metal roof decks shall be designed so that they will not have a deflection exceeding 1/240 of clear span under all types of loads (live & dead). Designer should take into account roof traffic conditions including mechanical equipment used for roof application.

PROCEDURE

Select clauses as required. *Optional clauses in italic.*

Copy in color denotes built-up roofing specification

Condition of Surface to Receive Roofing

See Page 5

Material Quantity Requirements

See Page 7

Application of Vapor Barrier Below Insulation

A. Felt Type

Coat the ribs of the metal deck with Steep Asphalt and then install two (2) full thicknesses of Koppers No. 15 Asphalt Felt, lapping each sheet nineteen (19) inches over the preceding sheet, mopping with Steep Asphalt the full width of the nineteen (19) inch lap. Extend all felt up vertical surfaces and cutoff at height of insulation.

Application of Insulation and Roofing Materials

1st a. Install insulation in steep asphalt applied to deck at rate of 12 to 15 lbs. per 100 sq. ft. and place insulation while steep asphalt is still molten to provide good adhesion. See Attachment Page 6.

b. If slope of deck is one-half (½) inch per foot or more, insulation must be able to retain nails and, in addition to being set in steep asphalt, insulation must be fastened to the metal deck with approved mechanical fasteners placed at all four (4) corners and the center of each sheet. If two layers of insulation are specified, top layer joints shall not coincide with joints of bottom layer. Fasteners shall be driven after the top layer of insulation is installed.

c. If U.L. and F.M. requirements are a factor for insurance rating, insulation must be listed and approved in accordance with their current data.

2nd. *Mop a uniform coating of Coal Tar Bitumen over the insulation preceding the application of roofing membrane.*

3rd. Spec. No. 17 wi

Apply over the entire surface, four (4) plies of Koppers Tarred Felt, lapping plies twenty-seven and one-half (27½) inches.

Mop solidly between each 27½ inch lap with Coal Tar Bitumen so that in no place shall felt touch felt.

3rd. Spec. No. 18 wi

Apply over the entire surface, three (3) plies of Koppers Tarred Felt, lapping plies twenty-four and two-thirds (24⅔) inches.

Mop solidly between each 24⅔ inch lap with Coal Tar Bitumen so that in no place shall felt touch felt.

If slope of roof is one-half (½) inch per foot or more, each ply of felt shall be nailed along the back or upper edge on twenty-four (24) inch centers. If base sheet alternate is used, each ply of base sheet shall be nailed two (2) inches from the back or upper edge on twenty-four (24) inch centers.

4th. Pour over the entire surface of the roofing membrane a uniform coating of Coal Tar Bitumen into which, while hot, embed not less than four hundred (400) pounds of gravel or three hundred (300) pounds of slag for each one hundred (100) square feet.

General Requirements on pages 5, 6 and 7 and Detail Specifications on pages 20 through 25 are a part of this specification and must be adhered to where applicable.

Specifications (continued)

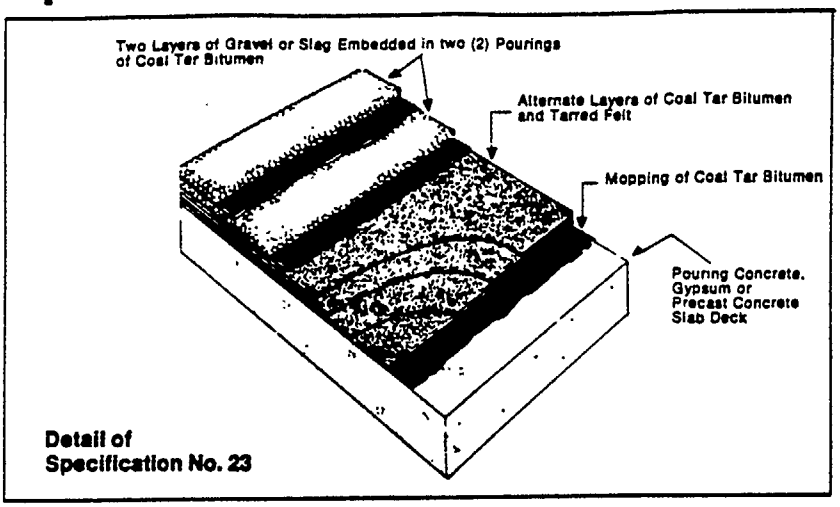

Detail of Specification No. 23

WATER COOLED ROOF: Water is designed to be contained on the roof at all times at a constant level by means of a drainage system and a water source. (See note on cold weather conditions.) Water Cooled Roofs also include spray pond roofs where the roof is constantly sprayed with water but not necessarily kept at a constant level. Water Cooled Roofs should be applied over poured concrete, gypsum or pre-cast concrete decks.
IT IS MANDATORY THAT THE WATER COOLING SYSTEM BE CLOSED DOWN AND THE ROOF DRAINED PRIOR TO COLD WEATHER. Neither roofing nor the structure will withstand the expansion caused by ice formation.
WATER RETAINING ROOFS: PROCESS WATER: Water from manufacturing process, cooling towers, etc., that regularly deliver water across the roof for normal drainage.
RETARDED DRAINAGE PONDING: Drains are sized to deliver a controlled amount of water to the storm system and thus regularly necessitate heavy water ponding.

deck construction: **Poured Concrete**

- **Poured Gypsum**
- **Precast Concrete**

Water Cooled Roofs
Water Retaining Roofs

SLOPE • See pg. 4
SURFACE • Double Aggregate (with double pour)

Spec. No. 23—4 ply—on deck
Spec. No. 24—3 ply—on deck

Spec. No. 23 wi—4 ply
Spec. No. 24 wi—3 ply
wi: with board type insulation

Spec. No. 23 wiv—4 ply
Spec. No. 24 wiv—3 ply
wiv: with board type insulation and vapor barrier

Note: The base sheet alternate shall not be used.

PROCEDURE

Select clauses as required. *Optional clauses in italic.*

Copy in color denotes built-up roofing specification

Condition of Surface to Receive Roofing

See Page 5.

Material Quantity Requirements

See Page 7.

Application of Built-up Roofing

1st. Mop deck completely with Coal Tar Bitumen.

2nd. Spec. No. 23

Apply over the entire surface four (4) plies of Koppers Tarred Felt, lapping plies twenty-seven and one-half (27½) inches. Mop solidly between each 27½ inch lap with Coal Tar Bitumen so that in no place shall felt touch felt.

2nd. Spec. No. 24

Apply over the entire surface three (3) plies of Koppers Tarred Felt, lapping plies twenty-four and two-thirds (24⅔) inches. Mop solidly between each 24⅔ inch lap with Coal Tar Bitumen so that in no place shall felt touch felt.

All felt shall be turned up not less than four (4) inches at vertical surfaces.

3rd. Pour over the entire surface of the roofing membrane a uniform coating of Coal Tar Bitumen into which, while hot, embed not less than four hundred (400) pounds of gravel or three hundred (300) pounds of slag for each one hundred (100) square feet.

If slope of roof is one-half (½) inch per foot or more, each ply of felt shall be nailed along the back or upper edge on twenty-four (24) inch centers.

4th. All loose gravel or slag shall be swept from surface and a second uniform pouring of approximately eighty-five (85) pounds of Coal Tar Bitumen shall be applied over the gravel or slag, into which, while hot, shall be applied a second layer of three hundred (300) pounds of gravel or two hundred (200) pounds of slag for each 100 square feet. The entire surface shall then be thoroughly broomed free from all loose gravel or slag. It is advisable to roll the finished surface with a light roller so that aggregate is thoroughly embedded.

Note:

a. At points where water pressure from the spray may be excessive, the roof surface should be protected with treated board platforms or other suitable construction to break the force of the water. These platforms should be laid on top of the roof surface and not fastened to the deck.

b. Insulation under a Water Cooled Roof should be of a type which is rigid, dimensionally stable with high compressive strength and of a sealed cellular structure such as Foamglas.

c. At all points where roofing membrane meets a vertical surface the flashing specifications used shall be as follows:

Water Cooled Roofs—Koppers Flashing Specification No. 110 only shall be used. See Pg. 21.

Water Retaining Roofs—Either Koppers Flashing Specifications No. 108, No. 710 or No. 110 shall be used. See Pg. 20 & 21.

d. Insulation and vapor barrier, if used, shall be applied according to procedures found in basic specifications 5 & 7 (Pg. 9), 10 & 11 (Pg. 10), 12 & 13 (Pg. 11).

e. Specifications 23 and 24 may be applied over wood deck (Pg. 8) or metal decks (Pg. 12) only if used as Water Retaining Roofs. Insulation and vapor barrier, if used shall be applied according to procedures found with these specifications.

f. Roof Structure design live loads for specifications 23 and 24 shall be a minimum of 50 psi and deflection shall not exceed 1/360 of the span, both in addition to the anticipated weight of the water. Insulation joints must be taped. Vapor barriers must be two ply, solid mopped. Use steep asphalt over metal decks. Wood must be treated to prevent warping (see "wood nailing strips").

General Requirements on pages 5, 6 and 7 and Detail Specifications on pages 20 through 25 are a part of this specification and must be adhered to where applicable.

Specifications (continued)

deck construction:

Wood Fiber

SLOPE • See pg. 4
SURFACE • Aggregate

Spec. No. 27—4 ply
Spec. No. 28—3 ply

Spec. No. 27 wi—4 ply
Spec. No. 28 wi—3 ply
wi: with board type insulation

Spec. No. 27 wiv—4 ply
Spec. No. 28 wiv—3 ply
wiv: with board type insulation and vapor barrier

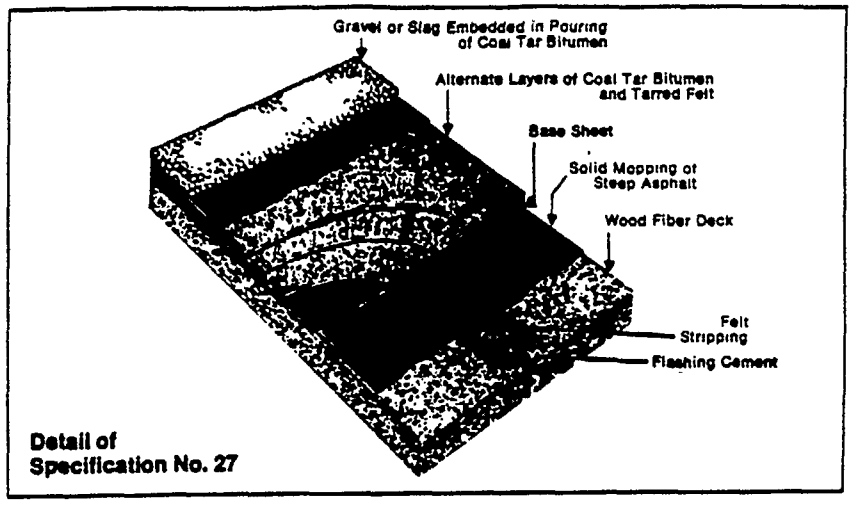

Detail of Specification No. 27

All decking must be installed in strict accordance with the particular deck manufacturer's recommendations for installation. Deck material must be protected during shipment, job site storage and prior to roofing application. No planks which have become structurally weakened due to moisture, fractures or mutilated edges may be used. All joints must be level and preferably grouted full and level with plank surfaces are recommended by the deck manufacturer. All planks must be well anchored to supporting members to resist movement in a fashion recommended by the deck manufacturer. Any planks which bow or deflect or do not seat securely must be replaced. Responsibility for the selection of a particular type of wood fiber deck, its installation, provision for expansion and contraction, its suitability to job requirements, and its ability to support anticipated loads in its environment rests with the designer and deck manufacturer.

PROCEDURE

Select clauses as required. *Optional clauses in italic.*

Copy in color denotes built-up roofing specification

Condition of Surface to Receive Roofing

See Page 5.

Material Quantity Requirements

See Page 7.

Insulation and Vapor Barrier

1. Insulation without Vapor Barrier. Install insulation in a *uniform* coating of Type III steep asphalt. Nailable insulation not exceeding one (1) inch thick may be installed using 1¾ inch Simplex Tube-Lok nails at all four corners and at center of board. Installation of roofing over insulation shall be as per specification outlined below with base sheet mopped solidly to the insulation in steep asphalt.

For bonded roofing applications, fasteners, other than Tube-Lok nails, must be acceptable to Koppers. Fasteners shall be applied at the minimum rate of one (1) per square foot as recommended by the Structural Wood Fiber Products Association.

2. Insulation with Vapor Barrier. Install two (2) plies of No. 15 asphalt felt lapped nineteen (19) inches in Type III steep asphalt as per 1st paragraph of this specification. Plies shall be mopped solidly so that in no place shall felt touch felt. Install insulation in solid mopping of steep asphalt. Roofing over insulation is to be in accordance with the details of the specifications below with base sheet mopped solidly to the insulation.

Application of Roofing Materials

1st. Install one (1) ply of Koppers asphalt coated base sheet over entire surface in solid mopping of Type III Steep Asphalt so that base sheet shall not touch the deck surface. Firmly broom or press entire surface of base sheet into hot steep asphalt so that no air pockets, wrinkles, buckles or kinks shall occur. Minimum side laps shall be four (4) inches and minimum end laps shall be six (6) inches. All laps shall be continuously sealed the full width of the lap.

2nd. Spec. No. 27

Apply three (3) plies of Koppers Tarred Felt lapping plies twenty-four and two-thirds (24⅔) inches. Where slope of deck is one-half (½) inch per foot or more, nail each sheet of felt six (6) inches from the back edge on twenty-four (24) inch centers. All laps shall be mopped with Coal Tar Bitumen the full twenty-four and two-thirds (24⅔) inches, so that in no place shall felt touch felt.

2nd. Spec. No. 28

Apply two (2) plies of Koppers Tarred Felt, lapping plies nineteen (19) inches. Where slope of deck is one-half (½) inch per foot or more, nail each sheet six (6) inches from the back edge on twenty-four (24) inch centers. All laps shall be mopped with Coal Tar Bitumen the full nineteen (19) inches so that in no place shall felt touch felt.

3rd. Pour over the entire surface of the roofing membrane a uniform coating of Coal Tar Bitumen into which, while hot, embed not less than four hundred (400) pounds of gravel or three hundred (300) pounds of slag for each one hundred (100) square feet.

General Requirements on pages 5, 6 and 7 and Detail Specifications on pages 20 through 25 are a part of this specification and must be adhered to where applicable.

DYCON® CONCRETE ROOF DECKS
BUILT-UP ROOFING SPECIFICATIONS

DECK CONSTRUCTION:

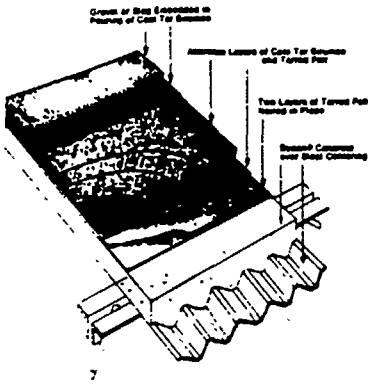

Detail of Specification No. 50

Substrate: Steel Centering

Spec. No. 50—5 ply
Spec. No. 51—4 ply

Spec. No. 50 wi—4 ply
Spec. No. 51 wi—3 ply
board type insulation

Spec. No. 50 bs—4 ply
Spec. No. 51 bs—3 ply
base sheet as first ply of roofing

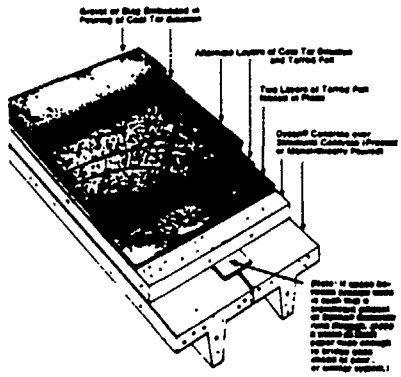

Detail of Specification No. 60

Substrate: Structural Concrete

(Monolithic Precast or Vapor Barriers)

Spec. No. 60—5 ply
Spec. No. 61—4 ply

Spec. No. 60 wi—4 ply
Spec. No. 61 wi—3 ply
board type insulation

Spec. No. 60 bs—4 ply
Spec. No. 61 bs—3 ply
base sheet as first ply of roofing

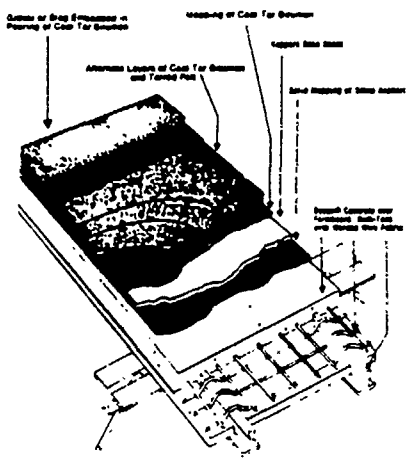

Detail of Specification No. 70 bs

Substrate: Formboard and Bulb Tees

Spec. No. 70—5 ply
Spec. No. 71—4 ply

Spec. No. 70 wi—4 ply
Spec. No. 71 wi—3 ply
board type insulation

Spec. No. 70 bs—4 ply
Spec. No. 71 bs—3 ply
base sheet as first ply of roofing

SLOPE • See pg. 4
SURFACE • Aggregate

The following specifications apply only to approved Dycon® concrete formulations.

The general requirements of Koppers current built-up roofing manual are part of this specification and must be adhered to where applicable.

PROCEDURE

Select clauses as required. *Optional clauses in italic.*

Copy in color denotes built-up roofing specification

Condition of Surface to Receive Roofing

See Page 5.

Material Quantity Requirements

See Page 7.

Application of Membrane Below Rigid Board Insulation

1. Apply over entire surface one (1) ply of Koppers coated base sheet, lapping each sheet four (4) inches over preceding sheet and nailing at lap no less than nine (9) inches, and down center of each sheet on nine (9) inch centers.

2. Extend plies up vertical surfaces and cut off at height of insulation.

For vapor barrier provisions contact your Koppers Representative.

Application of Insulation Over Membrane (or Dycon Concrete Deck)

Substrates:

Structural Concrete/Steel Centering

Apply a uniform coating of Coal Tar Bitumen over the entire surface into which, while hot, embed the insulation. If there are two (2) layers of insulation mop the entire surface of the first layer with Coal Tar Bitumen into which, while hot, embed the second layer of insulation.

Formboard Bulb Tees

Apply a uniform coating of Type III Steep Asphalt over the entire surface into which, while hot, embed the insulation. If there are two (2) layers of insulation mop the entire surface of the first layer with Type III Steep Asphalt into which, while hot, embed the second layer of insulation.

When a membrane is installed under the insulation, Type III Steep Asphalt may be used in lieu of nailing over a Formboard Bulb Tee Substrate.

Application of Roofing Materials Over Rigid Board Insulation

1st. Mop insulation completely with Coal Tar Bitumen.

2nd. Spec. No. 50wi—60wi—70wi

Apply over the entire surface, four (4) plies of Koppers Tarred Felt, lapping plies twenty-seven and one-half (27½) inches. Mop solidly between each 27½ inch lap with Coal Tar Bitumen so that in no place shall felt touch felt.

2nd. Spec. No. 51wi—61wi—71wi

Apply over the entire surface three (3) plies of Koppers Tarred Felt, lapping plies twenty-four and two-thirds (24⅔) inches. Mop solidly between each 24⅔ inch lap with Coal Tar Bitumen so that in no place shall felt touch felt.

Where slope of deck is one-half (½) inch per foot or more and deck permits nailing, nail along back or upper edge of each sheet on twenty-four (24) inch centers. Where deck does not permit nailing, nailing strips are required and each sheet nailed along back or upper edge at spacings to assure penetration of nailers.

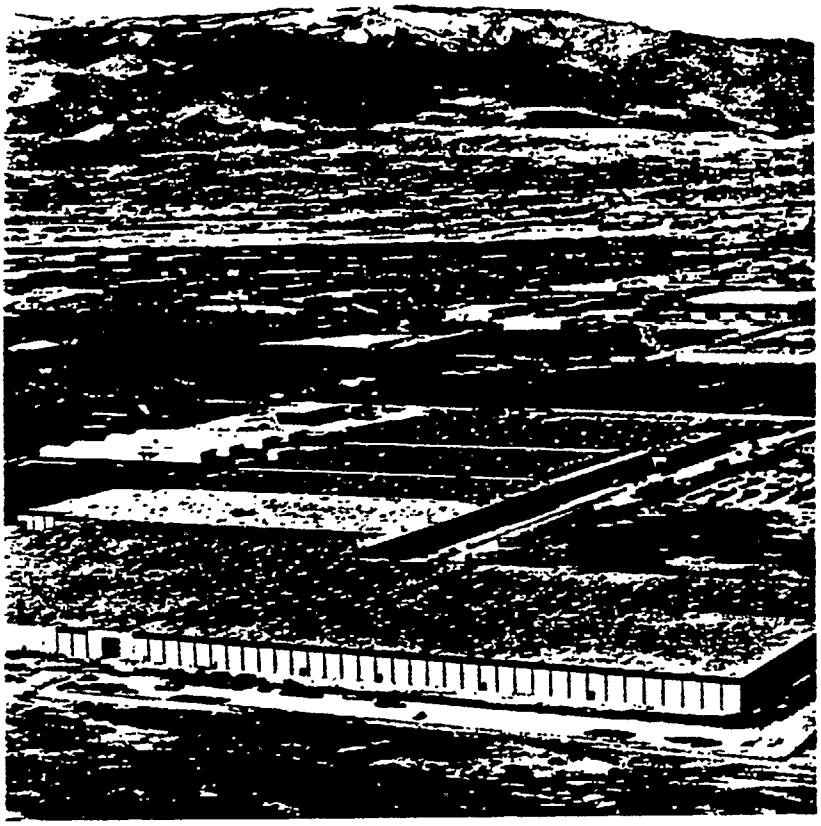

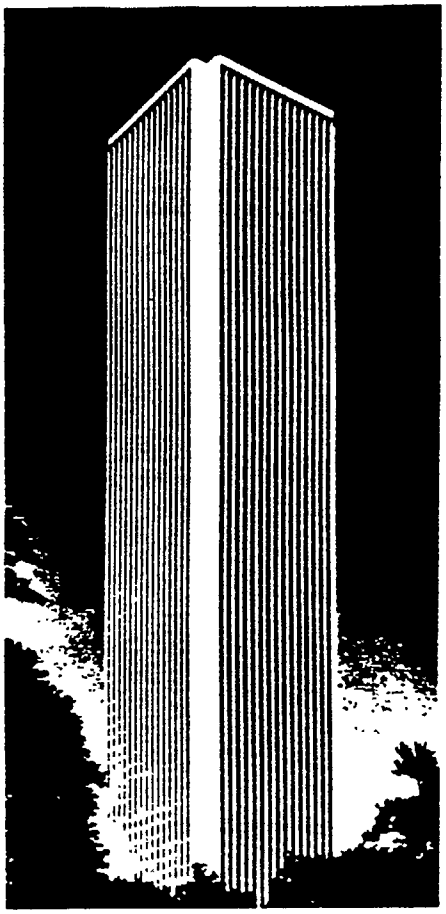



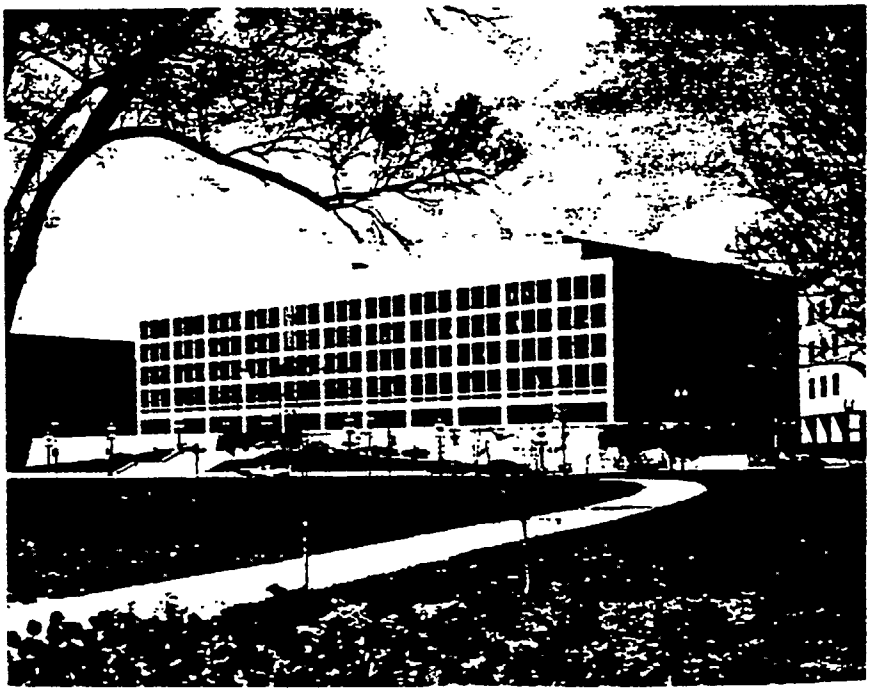

Koppers Multipurpose Membrane (KMM™)



KMM membrane is a versatile, prefabricated sheet of cold-applied roofing and waterproofing membrane. It is designed for application in new and maintenance roofing, foundations, plazas and various other areas of construction where effective waterproofing is required.

KMM membrane is supplied in two grades:

Standard KMM

Standard KMM membrane is a five-layer laminate composed of a thick, flexible plastic core protected on each surface by a layer of modified bitumen and an outer film of polyethylene.

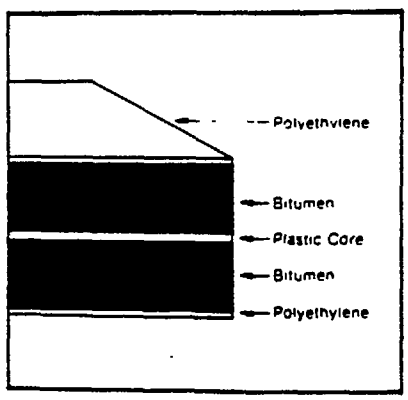

Aluminum KMM

Aluminum KMM membrane is a five-layer laminate composed of a thick, flexible plastic core which is protected on each side with a layer of modified bitumen. The top surface of Aluminum KMM is a heavy, embossed aluminum foil, and the bottom surface is a film of polyethylene.

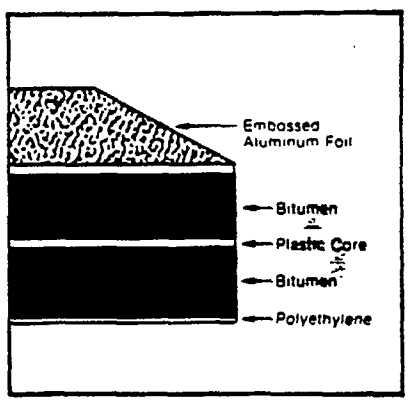

Both versions of KMM membrane are supplied in the form of compact, ready-to-apply rolls.

Use

Both KMM membranes are designed for use in various roofing and waterproofing applications.

Standard KMM membrane is normally used in roofing systems which incorporate an aggregate surface of where protection from the atmospheric elements is afforded to the KMM surface by other means. Standard KMM is appropriate for use in vertically as well as horizontally applied waterproofing systems where surface protection is specified.

Aluminum KMM membrane is ideally used in roofing systems in which the roof slope is too steep to permit aggregate surfacing. Aluminum KMM is also employed in flashing systems.

KMM membrane has good elongation properties to withstand normal structural movement when recommended architectural practices are followed. It is suitable for application over most decks and commonly used insulating materials which provide continuous support for the KMM membrane.

KMM is a prefabricated membrane which is simple to install. It results in a completely waterproof system impervious to air, water vapor and gases. Since KMM membrane is factory-made, it provides a factory-assured quality membrane of uniform thickness and material composition.

The function of the bitumen covering is to protect the central plastic core from damage during installation, to provide the basis for the heat fusion between the sheets and to add to the water resistance of the laminate.

The adhesion to the bitumen to the central core is positive and allows enough flexibility for the complex to give a floating membrane effect in service. In addition, KMM membrane has good elongation properties so there is virtually no possibility of damage from normal structural movement or minor substrate cracking.

The Koppers method can allow contractors to install roofing on new buildings at a much earlier stage than with conventional processes, and therefore proceed with other stages of construction.

Application

STANDARD KMM

Standard KMM is applied without adhesive in a quick and simple manner. The KMM is unrolled directly onto the roof deck or insulation with 4" end and side laps. The laps provide a joint which is subsequently sealed by heating with a standard propane torch. When complete, the KMM-sealed roof is covered with a protective topping.

Top Surfacing

Several topping systems are recommended for use with Standard KMM. Please contact your Koppers representative for details.

Stonemat Topping

a. **Fiber Glass Batting:** Minimum 1" thick unfaced batting. Roll or sheet form is acceptable.*

b. **Aggregate:** Either gravel, crushed aggregate or stone, graded to ¾" nominal size (S.P. No. 57—U.S. Department of Commerce Simplified Practice Recommendation R-163). The quantity to be used is 1200 lbs. per square (approximately 1½" thickness of loose stone).

*NOTE 1: If smooth gravel having no sharp edges is available, the fiber glass batting can be eliminated. Aggregate application by gravel buggy is recommended.

NOTE 2: Slag is not a permissible aggregate for the Stonemat Specification.

Bituminous Aggregate topping (BAT)

BAT consists of a combination of graded ⅜" gravel and asphalt emulsion. The recommended quantity is 650 to 700 lbs. per square (approximately ¾" to 1" thickness).

ALUMINUM KMM

Aluminum KMM is solidly adhered using a cold adhesive, and does not require a separate topping. It also may be applied to vertical walls and parapets.

KMM Adhesive

Package Size: 5 gal. containers.
Weight: Approx. 55 lbs. (includes container weight)

Coverage:

a. Roofing and Flashing Applications: 1 to 1½ gal. per square.

b. Vertical and Plaza Deck Waterproofing: 2 to 3 gal. per square.

Color Coatings for KMM Aluminum

Field applied coatings for KMM Aluminum are available in 14 colors. For color selection, consult Koppers Master Color Selection Chart 560-L under Koppers Acrylic Emulsions, Numbers 600 and 610.

Recommended Slopes for KMM Roof Systems

Koppers recommends that the maximum roof slope for loose stone topping systems be one inch per foot and that the maximum slope for the emulsion aggregate system be one and one-half inch per foot. There is no maximum slope for the KMM Aluminum roofing system.

Easy Modification and Repair

KMM membrane readily accommodates in-progress design changes such as the addition of unplanned rooftop projections, as well as any later additions or modifications to the building. In the event that KMM membrane sustains physical damage, it is a simple procedure to repair, requiring only a torch and appropriately sized pieces of KMM membrane.

Guarantee

A 5 year renewable guarantee is available for KMM membrane roofing installations. Consult your Koppers representative for details.

Note: For additional information and complete details see the KMM specification manual (Sweets Catalog File No. 7.1/Kop



KMM Membrane

	Standard KMM	Aluminum KMM
Roll Size	43" x 33 L.F. 118 sq. ft. 107 sq. ft. coverage	43" x 33 L.F. 118 sq. ft. 107 sq. ft. coverage
Thickness (nominal)	160 mils	120 mils
Weight (nominal)	120 lbs./roll (includes packaging & core)	95 lbs./roll (includes packaging & core)

Built-up Flashing Specifications

General

Flashings are the terminal closures of a roofing system which perform a waterproofing, and in some systems, a decorative function. Flashings must be installed at all intersections formed by vertical surfaces. Their importance cannot be stressed too strongly. Water entering the roofing system through flashings can result in water vapor forces which will destroy the effectiveness of the roofing.

Koppers flashings are an integral part of a Koppers roof. Designed for flexibility so that slight movements do not dislodge them and fastened securely to the wall, they give many years of service.

It is particularly important that the top edge of the flashing be protected by counter flashing, which will insure a diversion of the water away from any opening which might develop between flashing and wall.* In any case where the design or anchoring system of metal counter flashing is difficult, the top of the flashing system should be double stripped with Koppers Glasfab 4" wide set in Koppers tar base cement for Specification 110 or Koppers flashing cement in Specification 108.

Metal work is only useful for decorative, water shedding, or protection against mechanical damage, and is not a waterproofing part of the flashing system. Because of the high coefficient of expansion of sheet metals and the large temperature changes experienced on a roof, sheet metal or exposed metal components must be isolated from the waterproofing components of the roofing and flashing system as efficiently as possible to prevent the metal from splitting the membrane.

Flashing should be installed as roofing progresses to prevent water damage to insulation or deck under the roofing. If this is not possible water cut-off's must be installed and later removed when flashing is installed. Metal counter flashing or a top seal of Glasfab and flashing cement must be installed as flashing progresses.

The basic Koppers flashings require a metal cap flashing to be inserted in the raggle immediately upon completion of base flashing. The cap flashing is to extend into the raggle not less than two (2) inches and is to have not less than a four (4) inch exposed apron extending down over the base flashing. Completely fill raggle with Koppers flashing cement.

NOTE:

1. If bonded flashing is required, it must be installed in conjunction with a Koppers bonded roof and can be bonded for standard periods up to but not greater than the period for which the roofing is bonded. To be bonded, flashings must be set at least 7½" above the roofing base.
2. Metal Cap flashings are not bondable and are not included under any flashing bond.
3. Metal work of any description used as flashing or a part of a flashing system is not bondable and is not included under any flashing bond.

***Note:** Termination of flashing may be accomplished without metal counter flashing. Consult specification =710 on this page for specific details.

Specification No. 710 (KMM Aluminum)

Application Detail

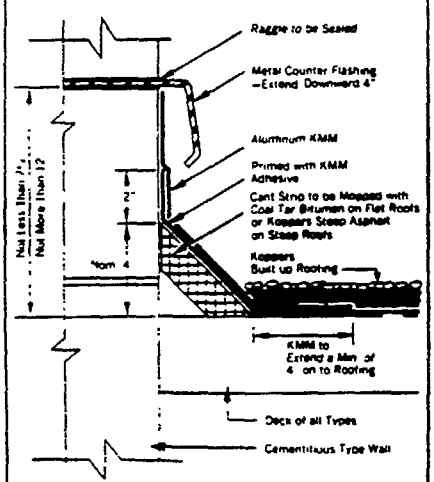

Specification No. 710

This specification is applicable for use with any KMM membrane or built-up membrane roofing system where its terminal closure intersects a vertical surface, such as a parapet wall.

METAL CAP**
PRIMER ADHESIVE
KMM ALUMINUM MEMBRANE

Koppers Flashing Specification 710 consists of an aluminum clad KMM membrane applied to waterproof the terminal closure of the roofing system. The Aluminum KMM forms a waterproof flashing system by total adhesion to its substrate and through the use of joint heat fusion, a unique process whereby all contiguous joints are affixed together to develop a monolithic waterproof flashing system.

Application

This specification system shall use Aluminum Grade KMM as the main flashing membrane.

Each course of Aluminum KMM shall be unrolled and cut to appropriate size prior to setting in place.

Apply a coat of KMM Adhesive at a rate of 1 to 1½ gal. per square to the completed roofing membrane and parapet wall.

While the adhesive is still tacky, set a layer of Aluminum KMM into place extending above the top of the roofing membrane a minimum of 7½" and out onto the completed roofing membrane a minimum of 4 to 6". Adjacent pieces shall be side lapped a minimum of 4".

Rub or brush thoroughly to obtain proper adhesion and to remove all entrapped air out from under the flashing membrane.

Heat-fuse all terminations, as well as side and end laps.

The contractor shall thoroughly inspect completed flashing system at the end of each day's work.

A high quality varnish-base aluminum paint may be applied to any exposed streaks or seams of bitumen.

****Note:** Terminations of flashing specification =710 may be accomplished without a sheet metal counter flashing. For additional details see Koppers KMM specification manual or your Koppers representative.

Specification No. 108 (reinforced asbestos)

Application Detail

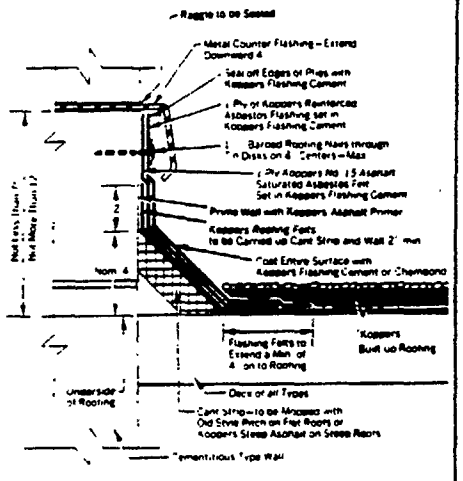

Specification No. 108

Recommended where sunlight is the predominant exposure. Should be used for all high flashing.

METAL CAP
ASBESTOS BASE (1 — 1)
COATED SURFACE

Application

Extend plies of roofing felts and bitumen moppings up all walls, parapets and curbs for a distance of two (2) inches above cant strip.

A raggle not less than seven and one-half (7½) inches or more than twelve (12) inches above the roof deck is to be provided except where capped nailers are used.

Prime all masonry walls from top of roofing felts to raggle with Koppers Asphalt Primer. Allow to dry thoroughly.

In a uniform coating of Koppers Flashing Cement,* install one (1) ply of Koppers No. 15 Asphalt saturated asbestos felt extending from the raggle to not less than four (4) inches from the base of the cant onto the roof. On top of this apply a second uniform coat of Koppers Flashing Cement into which embed one (1) ply of Koppers reinforced asbestos base flashing (reinforced fabric side down. Nail with one and one-half (1½) inch masonry roofing nails through flat tin discs along upper edge eight (8) inches o.c. maximum into mortar joints. For concrete construction, nail to treated wood nailing strips set in flush with the surface with appropriate nail through flat tin discs.

End laps for the two (2) plies shall be not less than three (3) inches and staggered not less than twenty-four (24) inches. End laps of reinforced base shall be nailed vertically a minimum of once into the wall at upper edge and once into the cant at a point not lower than the mid point of the cant.

End laps of reinforced base after nailing shall be covered with a strip of Koppers asbestos felt not less than four (4) inches wide set in a coating of Koppers Flashing Cement.

Coat entire surface of flashing with Koppers Flashing Cement or Koppers Asphalt Roof Coating No. 454 (including nail caps along top edge of flashing as well as top edges of felts to seal at wall.)

Interply and top coatings shall be troweled uniformly, full height and continuously approximately one-eighth (⅛) inch thick. Piles must be laid in smoothly with no pockets, wrinkles or buckles.

Install metal cap flashing.

***NOTE:** Hot applied steep asphalt may be used as an alternate to the two (2) interply trowelings of asphaltic plastic cement. One (1) ply of No. 15 asphalt felt may be used in lieu of the one ply underlayment sheet of No. 15 asphalt asbestos felt when required. All other requirements of this specification must be adhered to.

Specification No. 110 (For water cooled roofs only)

Application Detail

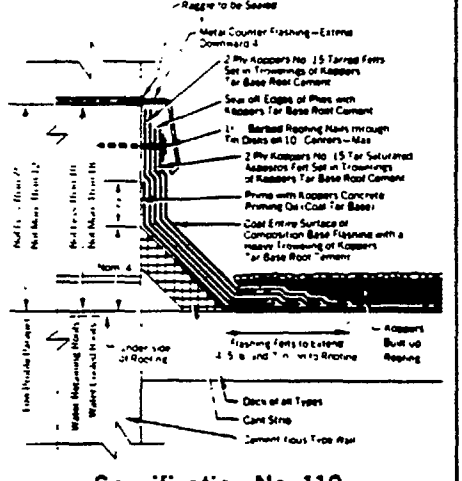

Specification No. 110

Recommended for water and corrosive atmosphere exposure. Low capped and sealed flashings.

METAL CAP
COMPOSITION BASE (2 — 2)
COATED SURFACE

Application

Cant strips shall be installed at the angle between the roof deck and the parapet wall or any other similar perpendicular surfaces.

Extend plies of roofing felts and bitumen moppings up all walls for a distance of two (2) inches above cant strip.

A raggle of not less than ten (10) inches above the roof deck is to be provided for water cooled roofs and water retain roofs.

Prime all masonry walls from top of roofing felts to raggle with Koppers Concrete Priming and Refractory Oil (coal tar base). Allow to dry thoroughly.

Set two plies of Koppers Tarred Felt in trowelings of Koppers tar base roof cement. Have plies extending from the bottom of the raggle; the first extending out onto the deck not less than four inches from the bottom of the cant strip, and the second, one inch beyond the first. Over this apply two layers of tar saturated asbestos felt similarly imbedded in Koppers Tar Base Roof Cement, each ply extending onto the deck one inch beyond the preceding ply, the preceding ply.

Nail with one and one-half (1½) inch barbed roofing nails through flat tin discs at upper edge approximately ten (10) inches o.c. (For brick or block construction, nail into vertical mortar joints. For concrete construction, nail to treated wood nailing strips set in flush with the surface.)

Felts are not to exceed ten feet three inches (10'3") in length. Ends of connecting strips are to overlap three (3) inches and are to break at least twenty-four (24) inches with laps of underlying strip.

All plies of felt shall be firmly pressed into the trowelings of Koppers Tar Base Roof Cement so that there will be no wrinkles in the finished surface.

Flashing Details

GENERAL INFORMATION

There are numerous flashing details that have been proven by experience over the years. There are normally a number of acceptable construction details for accomplishing one purpose. The architect should select a detail that best serves the purpose under the various and different conditions concerned with the specific job at hand. In certain cases, slight modifications are necessary to adjust a proven detail to job conditions or one method may serve better than another.

The details shown in this manual are some suggestions based on experience. Space limitations prohibit listing many others.

Design or selection is a responsibility of the architect.

Koppers representatives are available to review flashing details to assist the architect in providing the best details for specific jobs.

7.1 Raised Edge

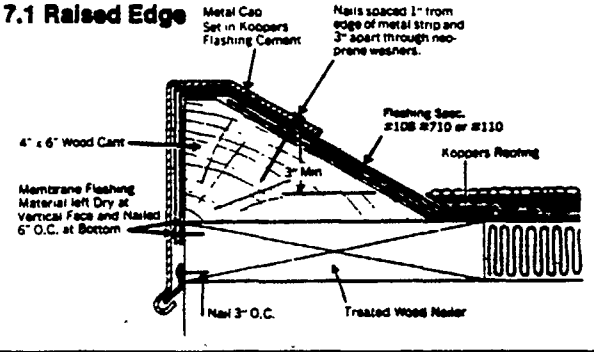

7.2 Relief Joint

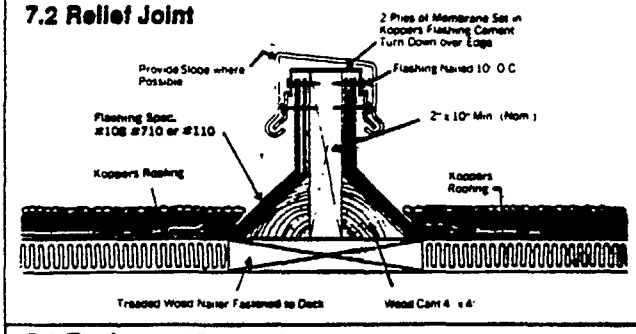

7.3 Equipment Support

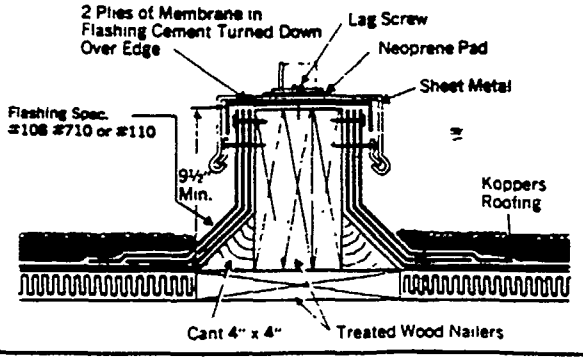

7.4 Parapet/Precast or Poured Concrete

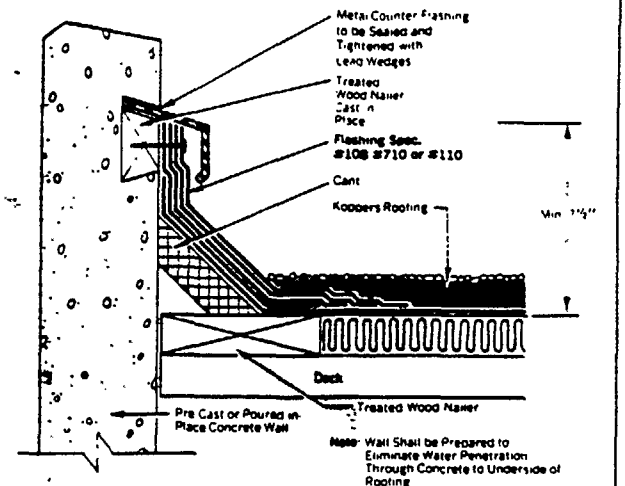

7.5 Parapet/Metal Curtain Wall

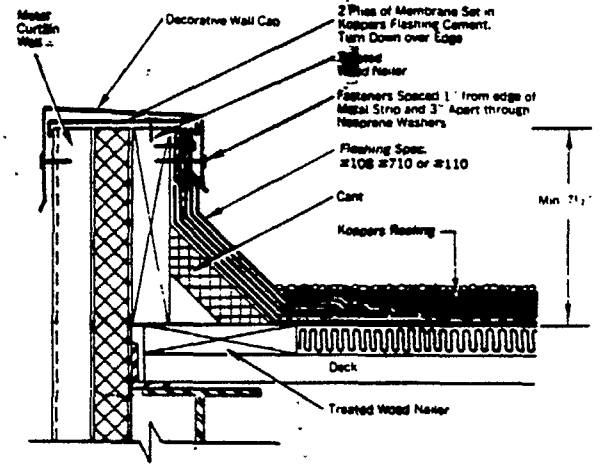

7.6 Parapet/Wall Cap

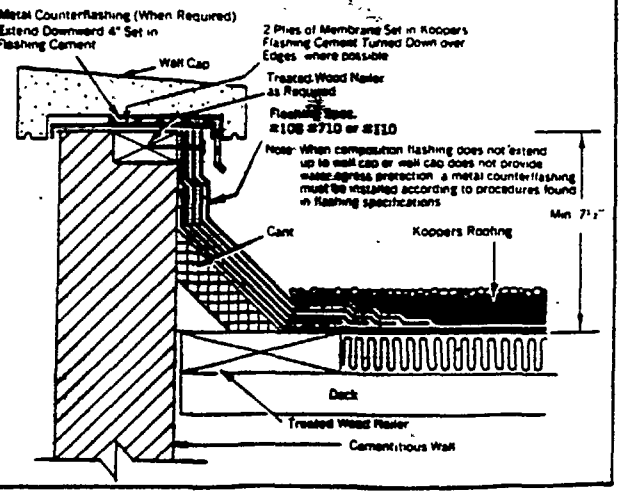

Flashing Details (continued)

7.7 Tapered Cant

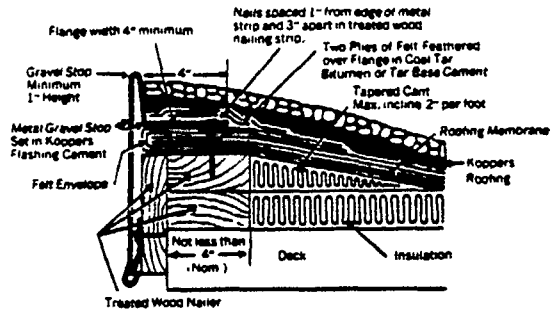

7.8 Tapered Cant

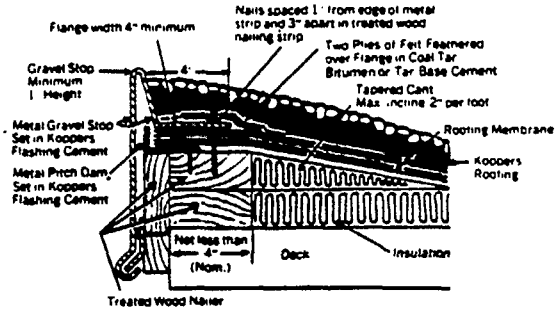

7.9 Hanging Gutter

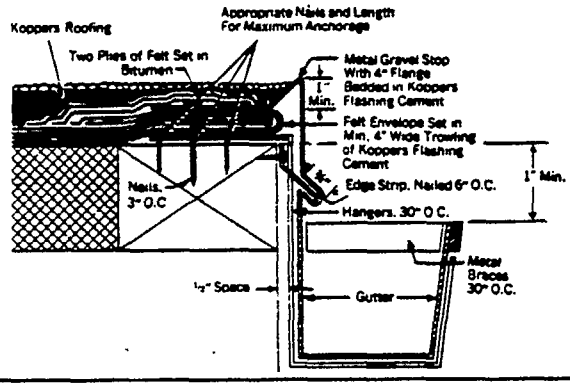

7.10 Vented Edge

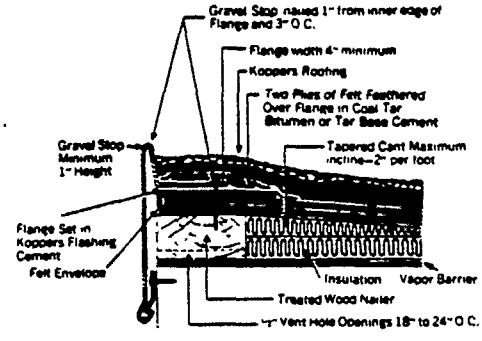

Vent Pipes, Stacks, Flagpoles, and Other Projections

7.11

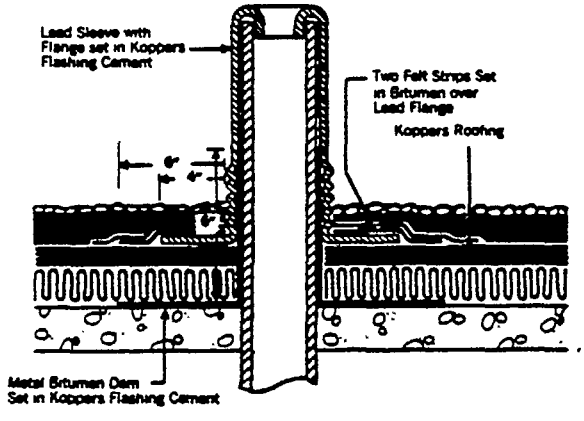

7.12

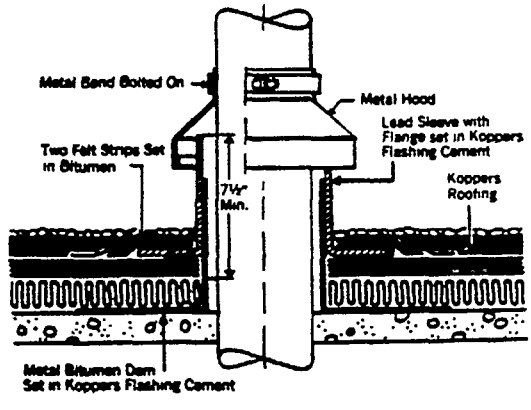

All vent pipes, stacks, flagpoles, or other projections penetrating the built-up roofing, whether indicated on drawings or not, must have a proper metal sleeve flashing with flange, pan flashing with flange or other flanged flashing installed.

Behind metal sleeves and beneath the roofing membrane next to deck install a metal bitumen dam as shown in detail. The sheet metal flange must be cemented to the surface of the felt with a mopping of hot Coal Tar Bitumen. Over flange apply, with alternate moppings, two (2) reinforcing plies of felt so that the first extends not less than three (3) inches beyond the outer edge of the flange and the second not less than six (6) inches.

Flashing Details (continued)

Future Columns, Sign Supports and Angle Irons

7.13

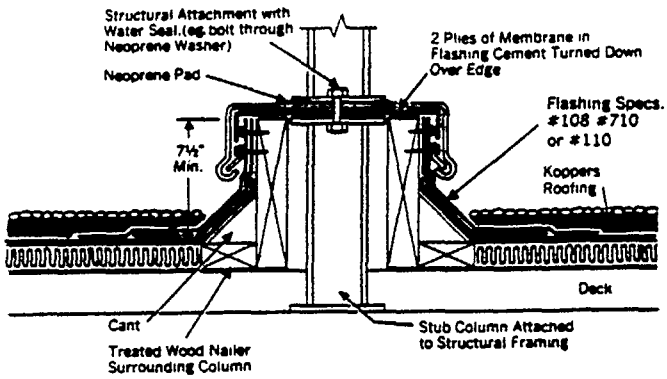

7.14

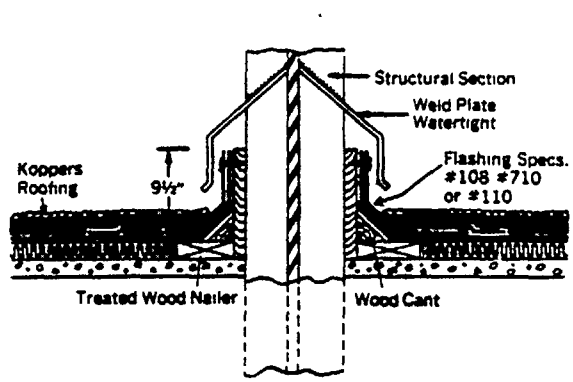

At all locations where stub or future columns, sign supports and angle irons are to penetrate built-up roofing, Koppers recommends wooden curbed base units with cant strips to be installed to accept standard built-up composition-flashing system. Where structural steel section extends beyond "stub" height, metal cap flashings with tight fit to the structural section must be fabricated and continuously welded to the projection to assure a watertight metal cap.

For pitch pocket design consult your local Koppers sales representative.

7.15 Curbed Expansion Joint

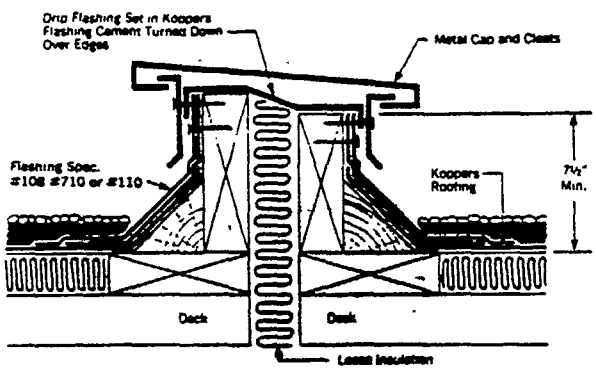

Curb expansion joints are to be flashed in accordance with Koppers specifications for parapet walls and must provide nailing to hold metal cap and flashing membrane in place. Metal cap must be designed to expand so as not to disturb flashing.

It is the responsibility of the designer of the building to provide for adequate expansion joints.

For the protection of the roofing system against splits caused by expansion and contraction, Koppers recommends that an expansion joint be installed: (1) on large roof areas at least every 200 feet in each direction, (2) at all places where the structural supports and roof assembly change direction, (3) where type of adjoining deck materials change.

Where control, expansion, or contraction joints are provided in structural steel, deck material, or deck system, provisions must be made for continuation through the roofing system.

See (Expansion Joints) Page 6.

7.16 Roof Drain

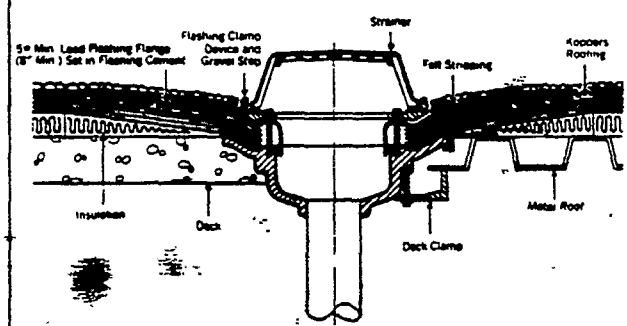

All roof drains shall be provided with metal roof drain flashing flanges which extend at least 12" beyond drain opening and shall be stripped with felt in accordance with drain detail. All drains should be provided with expansion joint sleeves.

The sheet metal flange furnished with the drain must be cemented to the surface of the felt with hot Coal Tar Bitumen or flashing cement. Over the flange apply, with alternate moppings or trowelings, two (2) reinforcing plies of felt so that the first extends not less than three (3) inches beyond the outer edge of the flange, and the second not less than six (6) inches.

Roof drains must be of a type provided with a wide lead or copper flange. Strainer construction should provide adjustment for meeting variations in roof level or slope.

To obtain proper drainage, roof drains should be located at points of lowest expected deflection in roof deck.

Special care must be taken to prevent bitumen migration into drain openings.

Flashing Details (continued)

7.17 Roof Vent

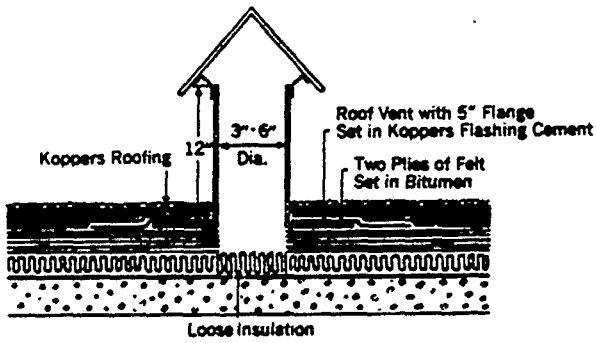

Koppers does not recommend occasional or spot vents through the roof as the only venting method or a substitute for underside or continuous vented systems. There may be certain instances where spot or mushroom-type vents might be deemed advisable by the designer for a new building (eg. at expansion joints for vent relief on long run underside continuous venting systems, etc.

Although controversial, the "Pitch Pocket" is one of the most frequently used design details.

7.18 Pitch Pocket

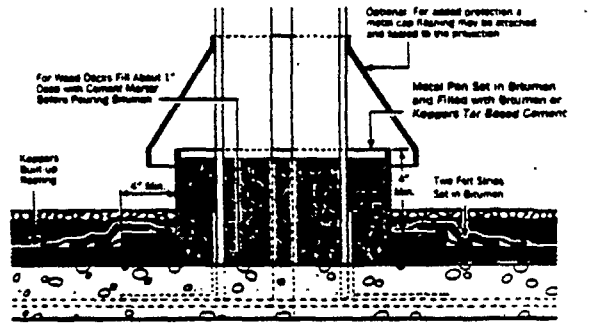

The sheet metal flange must be cemented to the surface of the felt with *hot coal-tar-bitumen or flashing cement*. Over the flange apply, with alternate moppings, two (2) reinforcing plies of tarred felt so that the first extends not less than three (3) inches beyond the outer edge of the flange and the second no less than six (6) inches.

Fill metal pan with hot coal-tar-bitumen or flashing cement. Paint exposed sections of all reinforcing rods with dampproofing paint.

7.19 Walkways (Treated Wood Walkway)

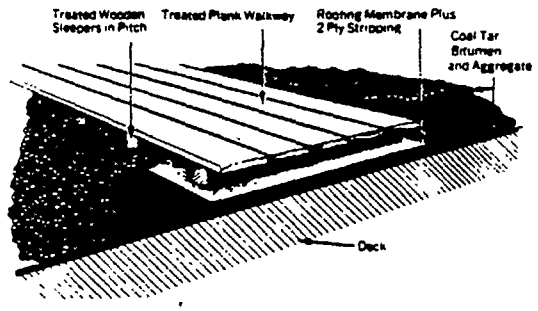

7.20 Traffic Pad

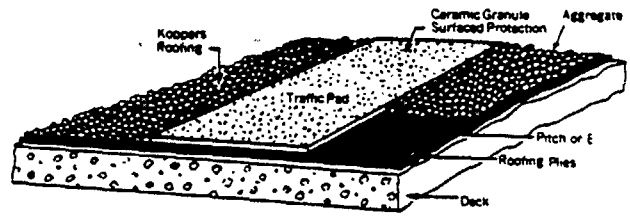

7.21 Roof Opening

Curbs extending a nominal 8 inches to 12 inches above *roof surface* shall be provided at all openings for skylights, ventilators, expansion joints, etc., to provide for installation of adequate base flashing.

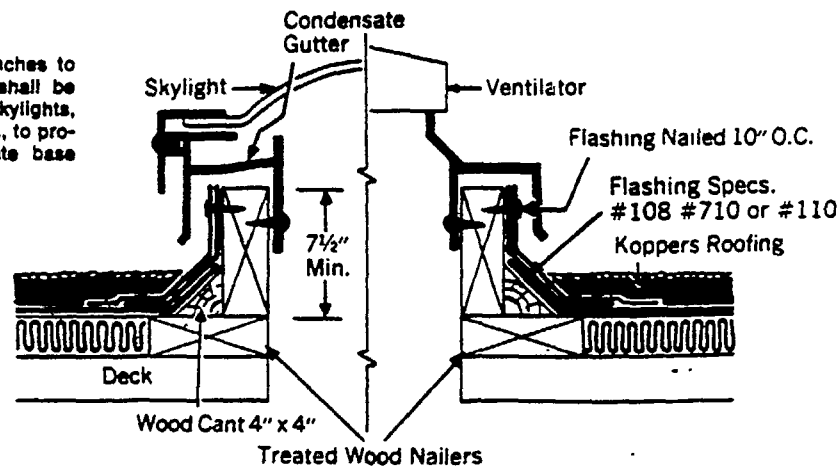

Koppers Roof Bond/Guarantees Program

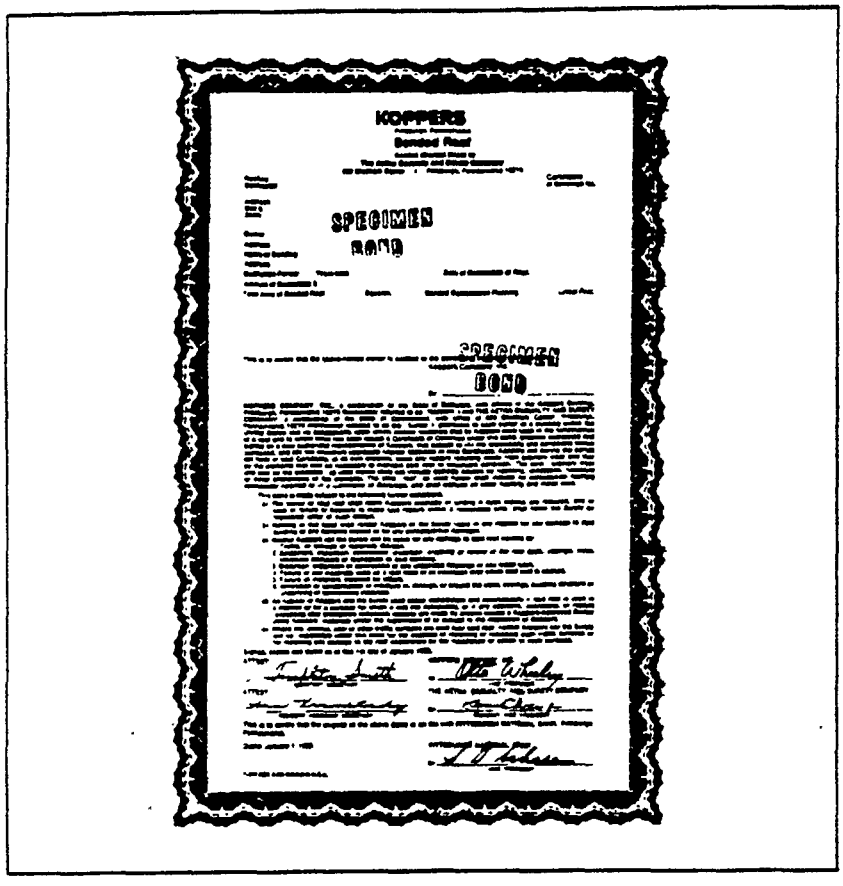
KOPPERS
Bonded Roof
SPECIMEN
BOND
SPECIMEN
BOND

Bonds and Guarantees are available for listed specifications in this manual. To qualify for a Koppers Roofing Bond or Guarantee, roofing and flashing must be constructed in accordance with Koppers Specifications, with Koppers materials, and by a roofing contractor approved by Koppers.

ROOF BOND PROGRAM

I. *Description*

Koppers bonds are available for 10, 15 or 20 year terms, and only cover built-in roofing and flashings where approved.

Koppers will issue a standard roof bond for Coal Tar Bitumen flat or low slope roofing and will include such Koppers steep asphalt roofing as required in conjunction with the flat or low slope roofing, provided, the steep roofing does not exceed 25% of the total roofing to be bonded. All roofing to be bonded must be constructed in conformance with Koppers specifications.

Koppers bonds are not available for residential roofing.

Koppers bonds are transferrable upon timely written notice of change of property ownership.*

*NOTE: Koppers roof bonds provide for repairs of leaks to the roofing not occasioned by defects in the building, abuse or extreme weather conditions during the term of the bond *up to the monetary limit specified in the bond.*

II. *Coverage*

A. Roof bonds provide for the following general benefits:

1. Use of quality materials.
2. Use of time proven specifications.
3. Roof application by a roofer knowledgeable in the application techniques of Koppers products.
4. Discussion of specifications during the planning stages and during construction.
5. Assistance to the owner as necessary for items such as leaks to the roofing not occasioned by building defects or additional roof projections, etc. which relate to the performance of the roofing.
6. Flashing membranes covered on request only.

B. Roof Bonds *DO NOT* cover the repair, installation, or replacement cost of the following:

1. Decking Materials
2. Vapor barriers
3. Insulation Products
4. Metal Work
5. Products in the roof assembly furnished by others.
6. Damage to the bonded roofing or flashing caused by the use of the products listed in 1 through 5 above, their installation or attachment.
7. Vandalism or owner abuse.
8. All other items presented in the sample bond presented above:

C. Koppers bonds are available within the Continental United States in all cases except those areas where Koppers does not presently provide inspection service.

D. Built-up flashing may be bonded for terms up to but not exceeding the term for which the roof is bonded.

E. Charges for the roofing bonds are made on a per square (100 sq. ft.) basis of the roofing membrane.

F. *Koppers reserves the right to cancel the bond if the roof is damaged due to causes not covered by the bond if it is determined its satisfactory performance for the remaining term of the bond is impaired.* Cancellation due to damage of this type *does not* provide for any refund of the original charge.

KOPPERS
Architectural and
Construction Materials

7.1/Ko

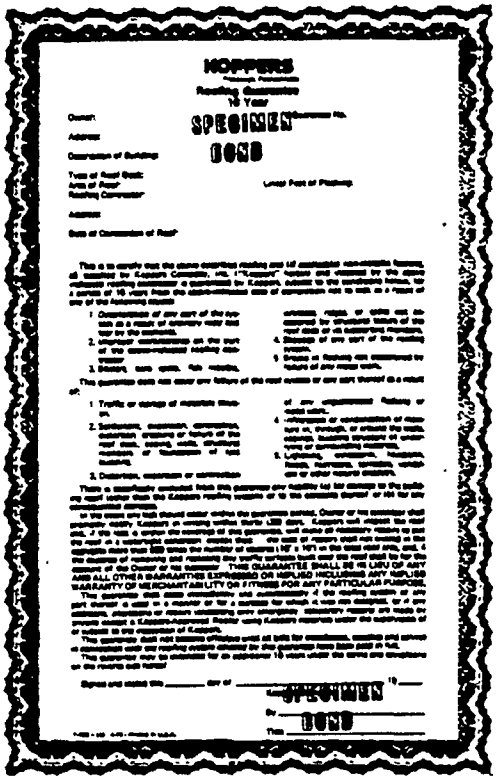
KOPPERS
SPECIMEN
BOND
SPECIMEN
BOND

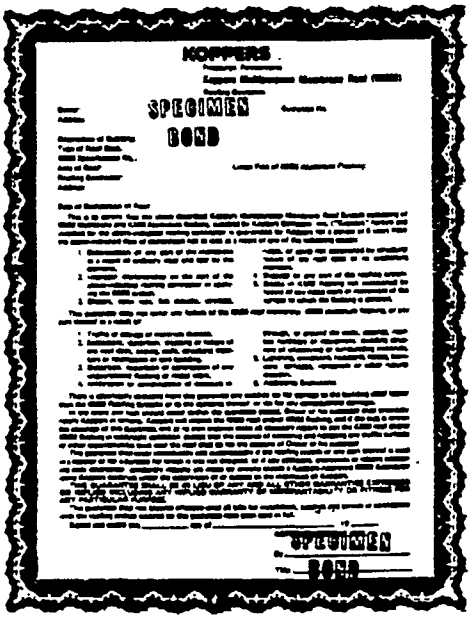
KOPPERS
SPECIMEN
BOND
SPECIMEN
BOND

Contact a Koppers Sales Office Near You

*Bessemer. Alabama 35020
(Birmingham)
P O. Box 752
205-744-9110

*Commerce. California 90040
(Los Angeles)
5900 S. Eastern Avenue
Suite 104
213-726-8666

Burlingame. California 94010
(San Francisco)
1801 Murchison Drive
415-692-3330

*Elmhurst. Illinois 60126
(Chicago)
188 Industrial Drive
312-833-3380

Southfield. Michigan 48075
(Detroit)
24800 Northwestern Highway
313-352-3920

St. Paul. Minnesota 55104
1000 N. Hamline Avenue
612-646-7801

Kansas City. Missouri 64111
Room 5 V.F W. Building
816-531-6680

St. Louis. Missouri 63101
706 Chestnut Street
314-241-8096

*West Orange. New Jersey 07052
Paragon Building
10 Rooney Circle
201-736-9150

Charlotte. North Carolina 28203
1409 East Boulevard
P O Box 3186
704-375-4427

Wickliffe. Ohio 44092
30060 Lakeland Blvd.
216-944-3800

Tulsa. Oklahoma 74103
310 Thompson Building
918-583-2233

Portland. Oregon 97229
7540 N W. St. Helens Rd.
503-286-3681

*Pittsburgh. Pennsylvania 15219
1028 Koppers Bldg.
412-391-3300

Houston. Texas 77015
Old Industrial Rd.
P O Box 9746
713-453-5446

*District Offices

KOPPERS
Architectural and
Construction Materials

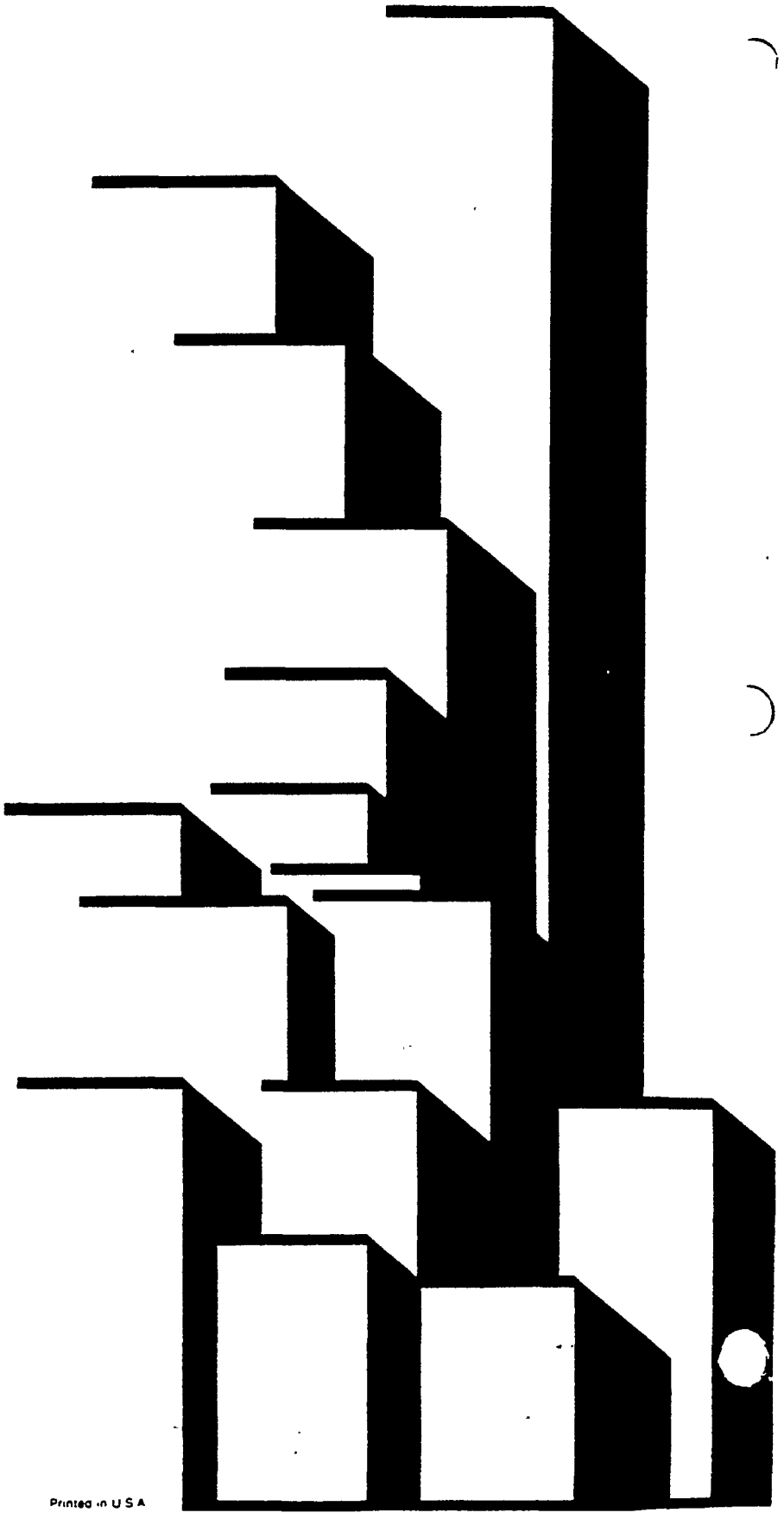

OM-447 96

Printed in U S A