6. Position the buret so the titrating solution can be run into the titration beaker without splashing and without running down the side of the beaker.

7. Make sure there is clearance between the stirrer and the electrodes by turning the stirrer several revolutions by hand.

8. Turn on the stirring motor and regulate the speed so there is adequate stirring without splattering solution out of the beaker.

9. Note the initial millivolt reading. (See Part B if a Leeds and Northrup Battery Operated Potentiometer is being used, or Part C if a Line Operated Direct Reading Potentiometer is being used).

10. Compare the initial millivolt reading with the approximate scale reading at which the maximum change in potential ("break") is expected to occur or to the designated scale reading stated in the method for the analysis being performed. (See Discussion b)

11. When the initial reading is greater than 250 mv. from the approximate or designated endpoint, add 2 ml. of titration solution to the beaker and allow to stir 30 seconds or until the needle comes to equilibrium. (See Discussion c)

12. Take a millivolt reading.

13. Repeat steps 11 and 12 until the scale reading is within 250 mv. of the approximate or designated endpoint.

14. When the millivolt reading is less than 250 mv. but greater than 100 mv. from the approximate or designated endpoint, add the titrant in 1 ml. increments, allowing to stir for 30 seconds or until the needle comes to equilibrium.

15. Take a millivolt reading.

16. Repeat steps 14 and 15 until the reading is within 100 mv. of the approximate or designated endpoint.

17. When the millivolt reading is less than 100 mv. from the approximate or designated endpoint, add titrant in 0.1 ml. increments, allowing to stir for 30 seconds or until the needle comes to equilibrium.

DSW 551098

STLCOPCB4089515

18. Determine the endpoint by one of the following procedures:

a. Titration to a maximum change in potential ("break").

1. Record the millivolt and buret readings.

NOTE: The difference in successive readings will become greater and greater until it reaches a maximum and will then diminish.

2. Continue adding 0.1 ml. increments of titrant and recording the readings (both millivolt and buret) until it is certain the titrant has been carried past the maximum change in potential.

3. From the recorded buret and millivolt readings, determine the buret reading which corresponds to the maximum millivolt increase due to 0.1 ml. addition. This is the endpoint.

b. Titration to a designated voltage.

1. Add titrant in 0.1 ml. increments until the millivolt reading is within 25 mv. of the desired reading.

2. Add titrant one drop at a time (allowing the solution to stir after each addition) until one drop causes the needle to reach the desired millivolt reading. Do not add titrant after reaching this point, as this is the endpoint.

3. Record the endpoint buret reading.

19. Make the necessary temperature and buret corrections to the endpoint buret reading. (See Reference 2 or 4 and the Calibration Section)

B. Operation of Leeds and Northrup Battery Operated Potentiometer

1. Release the galvanometer needle by sliding the button on the galvanometer marked with an arrow toward the front of the instrument.

2. Adjust the galvanometer needle to zero by rotating the black knob at the rear of the galvanometer.

NOTE: The center of the scale is the zero reading.

STLCOPCB4089516

3. Turn the potentiometer on by moving the switch marked "OFF-pH-V" to the "V" position and allow the instrument to warm up for at least five minutes.

4. After the 5 minute warm up period, zero the potentiometer in the following manner:

   a. Move the switch marked "+V, -V", to the "+V" position.

   b. Hold the switch marked "1-3-2" on the "1" position and adjust knob #1 to zero the galvanometer needle.

   c. Move the switch to the "2" position and hold it while zeroing the galvanometer needle with knob #2.

   d. Release the "1-3-2" switch to the "3" position and zero the meter needle with knob #3.

   NOTE: The #3 position is the normal operation position.

   e. Depress the measuring key and rotate it clockwise one quarter turn to lock it in position.

   f. Rotate the volt scale knob until the galvanometer needle is at zero.

   NOTE: If the needle can not be zeroed, turn the "+V, -V" switch to the "-V" position and repeat steps b and e.

   g. Release the measuring key and observe the galvanometer needle to determine whether or not it remains at zero. If the needle does not remain at zero when the measuring key is released, repeat the zero adjustments and volt scale adjustments until the needle does remain at zero when the measuring key is depressed and when it is released. This is the initial millivolt reading.

   NOTE: The measuring key must be depressed to take measurements and released for zeroing the instrument.

5. After each addition of titrant, take a millivolt reading by rotating the volt scale knob until the galvanometer needle is at zero and observing the reading on the volt scale.

C. Operation of Line Operated Direct Reading Potentiometer

1. Connect the potentiometer to a 110 V power source and allow the instrument to warm up for at least five minutes.

STLCOPCB4089517

2. After the five minutes warm up period, adjust the needle to zero with the adjustment knob or knobs.

NOTE: After the line operated instrument is zeroed, further zeroing is usually not necessary unless the instrument is shut off.

3. Turn the voltage switch to "Volts" or "Read", depending on the particular instrument being used.

4. Turn the scale selector knob so the needle will be on a readable scale. The millivolt reading to which the needle points is the initial millivolt reading. After each addition of titrant, the potentiometer will give a direct millivolt reading.

CALCULATION

Use the calculation stated in the specific method for the analysis being performed.

DISCUSSION

a. The precision of this method may be different for different analyses. The specific method for the material being analyzed will state the precision.

b. The procedure described in this method is written for carrying out titrations for the first time. Experience may show that for a specific sample the reagent may be added at a faster rate than this method states. Also, the specific method for the analysis being performed may modify this method.

c. This method is written for use with burets having a 50 ml. capacity. If it is desired to use a 10 ml. buret with dilute solutions, the increments stated should be divided by 5, i.e., 2 ml., 1 ml. and 0.1 ml. increments should be reduced to 0.4 ml., 0.2 ml. and 0.02 ml., respectively, when using a 10 ml. buret.

CALIBRATION

Fill a clean buret with double distilled water of known temperature. Drain 10 ml., 20 ml., 30 ml., 40 ml., and 50 ml. portions into previously tared weighing bottles, each time filling the buret to the zero mark. Reweigh the weighing bottles. The correct volume is equal to the weight of water times the density of water at the known temperature (See Reference 3 or other literature

STLCOPCB4089518

containing a table of water densities) The correction is equal to the difference between the apparent volume read off of the buret and the calculated corrected volume. Make the calibrations in duplicate.

REFERENCE

1. Directions For No. 7663-A-1 Universal pH Potentiometer Assembly, Direction Book Std. 1358, Leeds and Northrup Company, Philadelphia, Pa.

2. Kolthoff and Stenger, Volumetric Analysis, Vol. II, p. 29.

3. Mahin, E. G., Quantitative Analysis, 3rd Edition, 1924, pp. 155-158.

4. Strouts, Gilfillan and Wilson, Analytical Chemistry, The Working Tools, Vol. I, Table 4, p. 267.

"The information contained herein is, to our best knowledge, accurate; but all recommendations or suggestions are made without guarantee, since the conditions of use are beyond our control. Monsanto disclaims any liability for loss or damage incurred in connection with the use of the above."

STLCOPCB4089519

POTENTIOMETRIC TITRATION ASSEMBLY

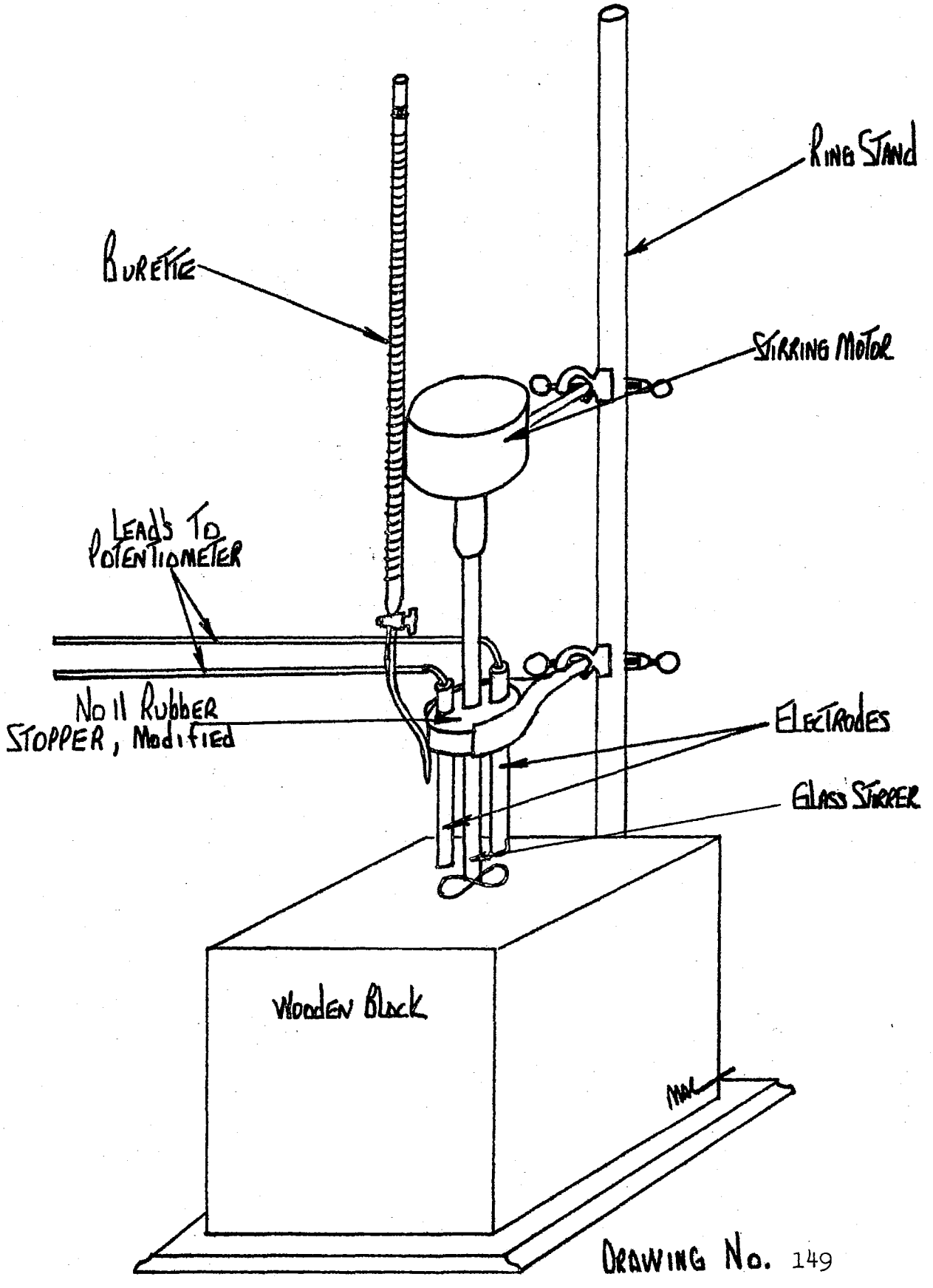

DRAWING No. 149

DSW 551103

STLCOPCB4089520