The *Stoker Manufacturers Association* has published standard recommendations on setting heights for stokers having capacities up to 1200 lb of coal per hour[2].

The empirical formulas for determining these setting heights are:

For burning rates up to 100 lb coal per hour

$$H = 0.1125\,B + 15.75 \qquad (1)$$

For burning rates from 100 to 1200 lb coal per hour

$$H = 0.03\,B + 24 \qquad (2)$$

where

H = minimum setting height, inches, measured from dead plates to crown sheet for steel boilers. For cast-iron boilers height may be $\frac{7}{8}\,H$.

B = burning rate coal per hour, pounds.

Standards for minimum firebox dimensions and base heights have been formulated by the *Stoker Manufacturers Association* as shown in Fig. 11[2].

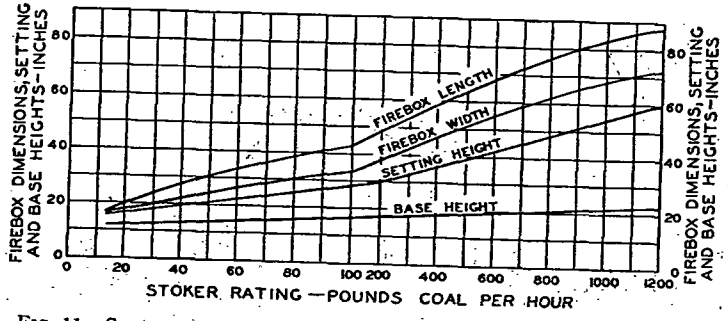

FIG. 11. SUGGESTED MINIMUM FIREBOX DIMENSIONS AND BASE HEIGHTS[a]

[a] For reference in selecting or designing boilers and furnaces for stoker firing. Dimensions shown are for net inside clearance at grate level using coal with heating value of not less than 12,000 Btu per pound. Under certain conditions smaller fireboxes will permit satisfactory performance but these dimensions are preferred normal minimums.

In considering these recommendations, it should be understood that they show the average recommended minimum. There are many factors affecting the proper application of stokers to various types of boilers and furnaces, and, in certain instances, setting height or firebox dimensions shown in the standards may be modified without impairing performance. Such modification rests with the experience of the installer, or designer, with a particular stoker, the type of fuel used, and the construction of the boiler or furnace.

Installation of stokers (particularly smaller sizes) from the side of the boiler or furnace will sometimes facilitate clinker removal.

Rating and Sizing Stokers

The capacity or rating of small underfeed stokers is usually stated as the burning rate in pounds of coal per hour. Codes for establishing uniform methods of rating anthracite and bituminous coal stokers have been adopted by the *Stoker Manufacturers Association*[3].

The Association also has adopted a uniform method of selecting stokers that is published in convenient tables and charts[2]. The required capacity of the stoker is calculated as follows:

$$\frac{\text{Load (Btu per hour)}}{\text{Heating value of coal (Btu per pound)} \times \text{over-all efficiency of stoker and boiler or furnace}} = \text{Stoker burning rate required (pounds of coal per hour)}$$

In determining the total load placed on a stoker-fired boiler by a steam or hot water heating system, a piping and pick-up factor of 1.33 is commonly used in sizing the stoker, but this factor should be increased at times due to unusual conditions.

Controls

The heat delivery from the stoker of the smallest household type to the largest industrial unit can be regulated accurately with fully automatic controls. The smaller heating applications are controlled normally by a

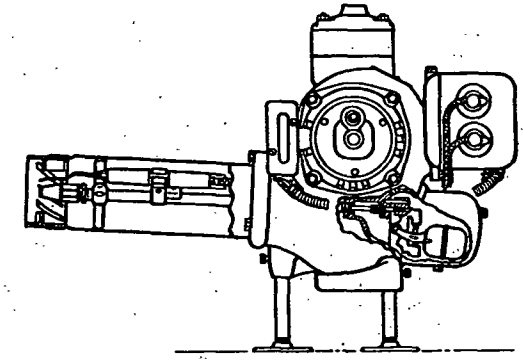

FIG. 12. LOW PRESSURE ATOMIZING OIL BURNER

thermostat placed in the building to be heated. Limit controls are supplied to prevent excessive temperature or pressure being developed in the furnace or boiler and refueling controls are used to maintain ignition during periods of low heat demand. Automatic low water cut-outs are recommended for use with all automatically-fired steam boilers. (See Chapter 34.)

DOMESTIC OIL BURNERS

An oil burner is a mechanical device for producing heat automatically from liquid fuels. Two methods are employed for the preparation of the oil for the combustion process; atomization, and vaporization. The simpler types of burners depend upon the natural chimney draft for supplying the air for combustion. Other burners provide mechanical air supply or a combination of atmospheric, and mechanical. Ignition is accomplished by an electrical spark or hot wire, or by an oil or gas pilot. Some burners utilize a combination of these methods. Continuously operating burners may use manual ignition. Burners of different types