PLAINTIFF'S EXHIBIT
ASI-653

GPH-60 & 80
GAS BOILER
by

AMERICAN-Standard

INSTALLATION–OPERATION
AND
MAINTENANCE MANUAL

FOR PACKAGED
GAS HEATING UNITS

APPROVED BY AMERICAN GAS ASSOCIATION

NOTICE TO INSTALLER AND OPERATOR
THIS BOOKLET MUST BE AFFIXED ON
OR ADJACENT TO THE HEATING EQUIPMENT

AMERICAN-Standard

First in heating . . . first in plumbing

BP-7950 REV.12-66

BOILER NUMBER	A	B	C
GPH-60	28 3/8	24 1/8	18 7/8
GPH-80	31 3/8	27 1/8	21 7/8

NOTE:
FOR GPH-60 CIRCULATOR LOCATED ON LEFT SIDE (SHOWN)
FOR GPH-80 CIRCULATOR LOCATED ON RIGHT SIDE

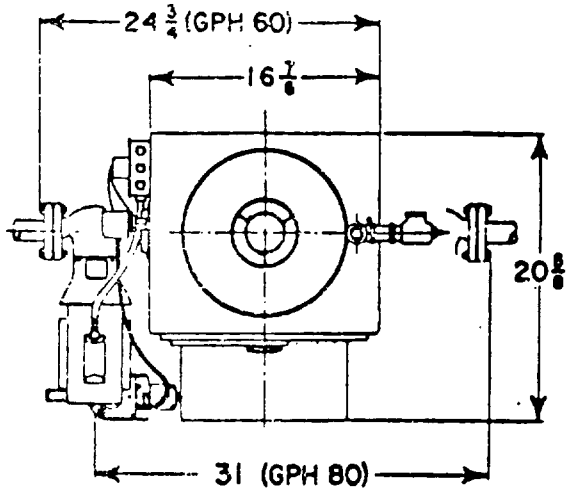

TOP VIEW

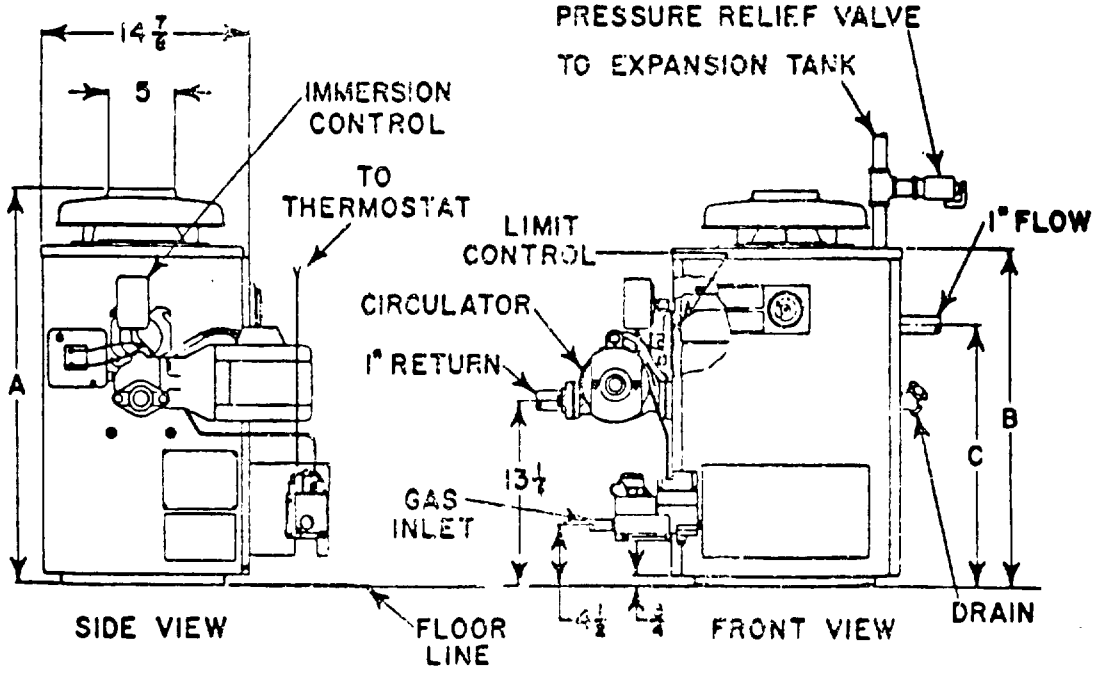

Fig. 1

18790

PACKAGING

The GPH Gas Boiler is shipped in one package - the assembled boiler, and drafthood. The boiler unit is shipped in two sizes, the GPH-60 and GPH-80.

INSTALLATION

This appliance should be installed in accordance with the latest American Standards Association instructions, "Installation of Gas Appliances and Gas Piping." Reference should also be made to gas company regulations and local building, plumbing, or other codes that are in effect. Should any conflict exist between the A.S.A. or code instructions and the following suggestions, the former must take precedence.

LOCATION

Careful consideration must be given to the location of the boiler in relation to any combustible material and to any obstacle which might interfere with maintenance. This boiler has been approved for less than standard clearance as indicated on Figure 2. Minimum clearances are measured from the boiler jacket; however, practical service clearance must be measured with external components in mind (See Figure 1) unless those parts are to be separated from the unit. ACCESSIBILITY CLEARANCES MUST TAKE PRECEDENCE OVER FIRE PROTECTION CLEARANCES.

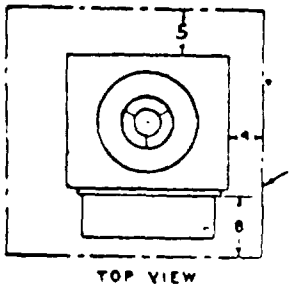

NOTE: 8" clearance on left side of boiler should be extended to 24" for access to controls if left closet panel is not removable.

Provisions must be made for combustion air where normal infiltration is not adequate (Full Basements would normally provide adequate ventilation); either of two methods may be employed to insure proper circulation of air:

a. Two (2) openings -- one near the floor and one near the ceiling -- to interior space with normal infiltration, each with a minimum free area of one square inch per 1000 Btu per hour of the input rating but with a minimum of 100 square inches.

b. An opening to the outdoors with a minimum free area of one square inch per 4000 Btu per hour of the input rating.

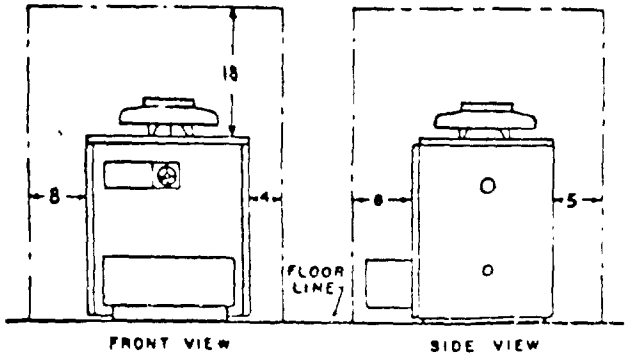

MINIMUM CLEARANCE FOR CLOSET INSTALLATION

NOTE: Front View
Side clearances, 8" and 4" apply to GPH-60 Boiler. These dimensions are reversed for GPH-80 Boiler.

FIG. 2

CONNECTIONS

The boiler should be moved in the shipping carton to its approximate location and its carton removed. Lifting and handling of the boiler into its final location may be made easier with a convenient length of pipe screwed into the flow tapping on the upper right-hand side.

A drip leg piping arrangement should be installed between the main gas line and the boiler, as shown in Fig. 3.

It is essential that a ground joint union be installed between a tee in the drip leg and the connection at the boiler gas valve.

CAUTION -- Before the gas piping system is put into service, it must be carefully tested to insure a gas-tight arrangement; a soap and water solution, or other acceptable material, should be used in testing for leaks.

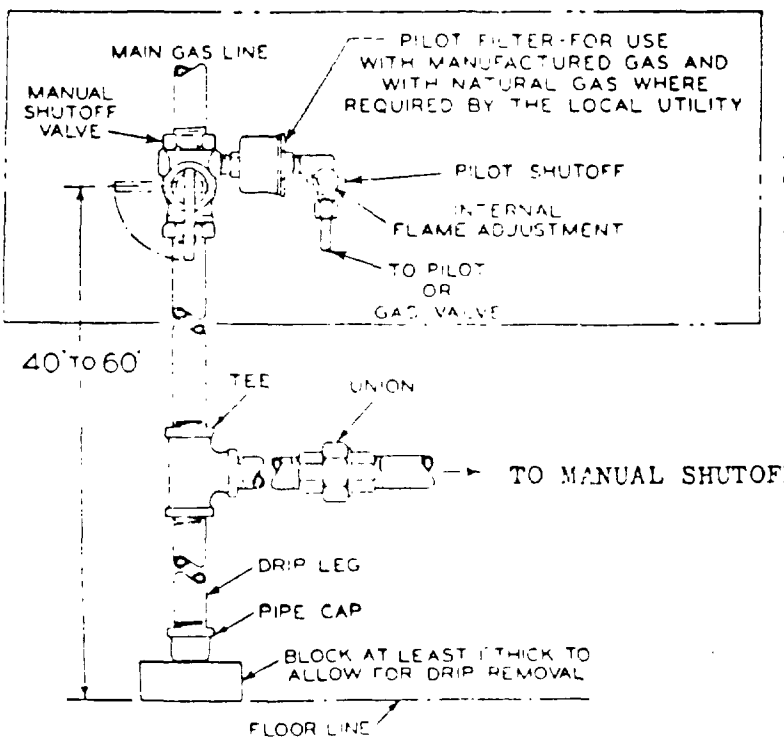

Recommended piping when Aux. manual shutoff valve or separate manual shutoff valve and automatic gas valve are supplied.

NOTE: All piping shown not supplied by ARSS Corp.

18792

FIG. 3

PIPE DELIVERY CAPACITY

Capacity of Pipes in Cubic Feet of Gas Per Hour

Length of Pipe in Feet	Pipe Size 3/4"	1"	1-1/4"
10	212	425	725
20	150	300	510
30	122	252	425
40	105	216	370
50	95	195	330
75	77	160	270
100	66	134	232

The supply to the heating system must be connected to the boiler at the upper right-hand side or top (see Page 9 for recommended hook-ups). The water return is connected to the circulator on the lower left-nand side (right-hand side for GPH-80).

Installation of a conventional-type expansion tank is recommended since the GPH boiler includes the "Eliminaire Principle" which directs air, released by the heating of water, out the top of the boiler. No air removing or separating device need be added to the heating system because the released air is directed into the expansion tank. The expansion tank must be installed with its connecting opening aligned vertically with the tapping on top of the boiler. The pressure relief valve must be put in the branch of the pipe tee. In locating the tank, particularly cold or exposed places should not be utilized, to avoid the possible serious damage resulting from freezing. A closed valve in the pipe to the expansion tank during operation of the boiler may cause equal damage.

A pre-pressured diaphragm-type tank may be installed in lieu of the conventional tank. If employed, it is important that an automatic air vent be installed to relieve air from the system.

Recommended and alternate methods of expansion tank hook-ups are shown on Page 9.

A gate valve (for purging) should be installed as close as practical to the boiler outlet (see "Fill Procedure" on Page 8).

If an automatic fill valve is installed, it is recommended that a bypass (with shut-off valve) be piped around the valve so that full water flow rates may be used to adequately purge the system of air on initial fill.

30 psi relief valves are standard equipment on GPH boilers; however, the boilers are suitable for use with 50 psi relief valves, if required.

The drafthood must be installed on top of the boiler, and flue connection made from the drafthood to the gas vent or chimney with a minimum of 1/4" pitch per foot of horizontal run. The flue connector should be at least as large as the drafthood outlet. Care should be exercised to avoid blocking the chimney by extending the flue pipe beyond the inside wall of the chimney. When two or more appliances vent into a common flue, the area of the common flue must at least equal the area of the largest flue plus 50 per cent of the areas of the additional flues.

An electric service line must be run from a switch to the junction box, or--with self-energizing controls--to the circulator. For multiple zone installations, the wiring instructions accompanying a zone control valve set should be followed. Other wiring will have been completed at the factory.

At the beginning of the heating season the manual switch in the electric service line must be closed to start the circulator pump which will then constantly circulate water of varying temperatures, depending upon the heat requirements. At the end of the heating season, the manual switch should be opened.

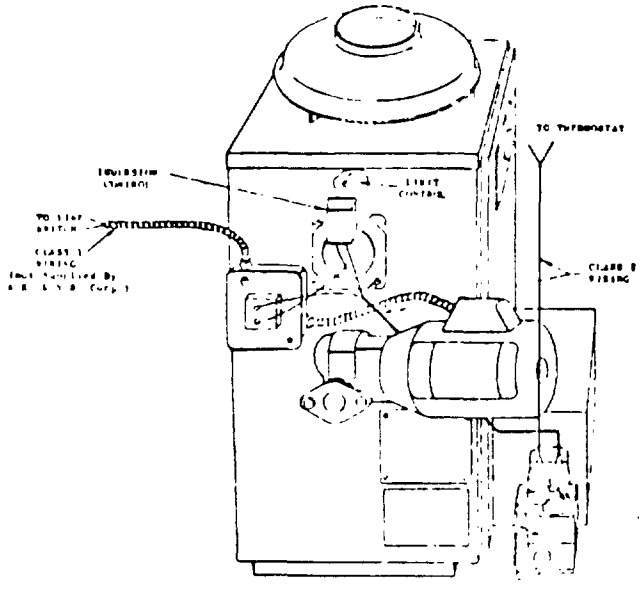

GPH - 60

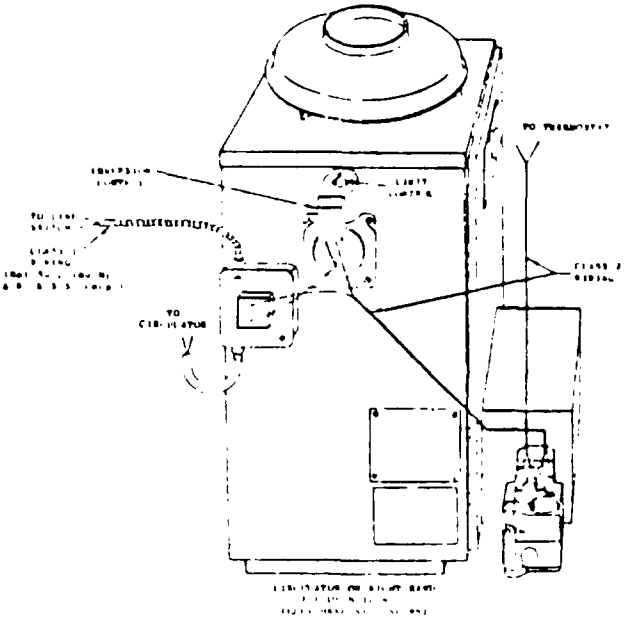

GPH - 80

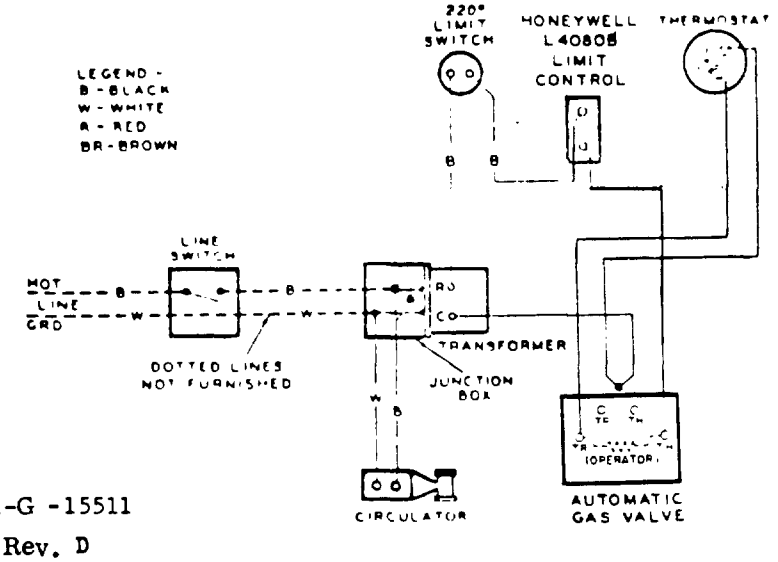

11-G -15511

Rev. D

GAS BOILER WIRING DIAGRAM
FORCED HOT WATER CIRCULATION

18795

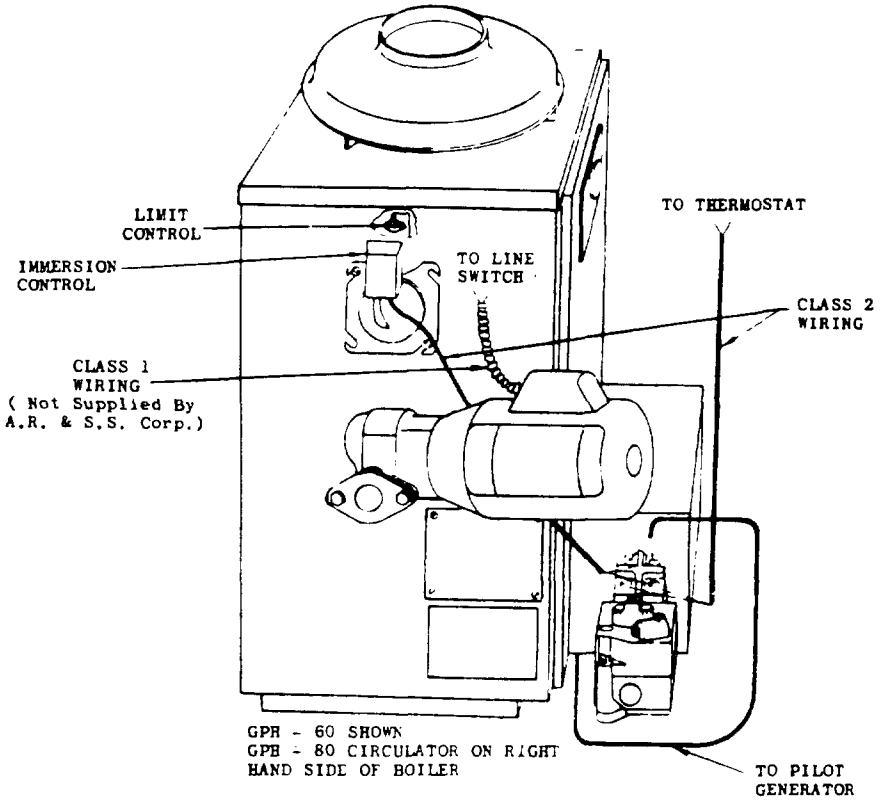

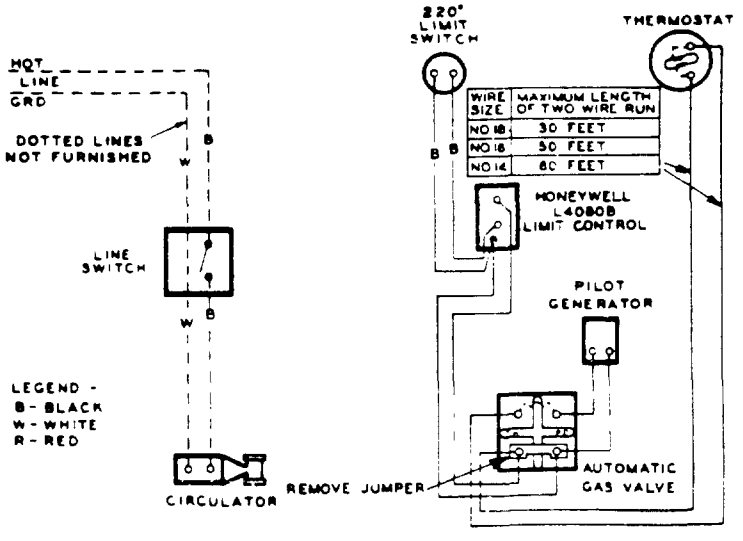

GPH 60 AND 80 GAS BOILER WIRING DIAGRAM
FORCED HOT WATER CIRCULATION, SELF-ENERGIZING CONTROLS

18796

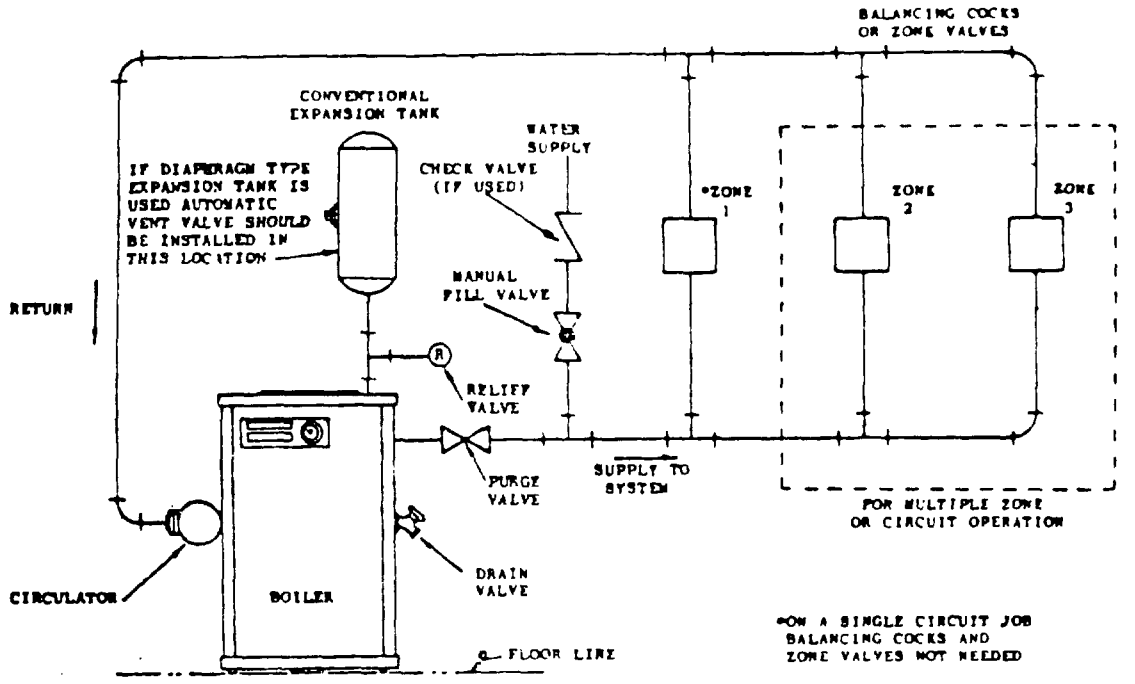

Fig. 6

FILLING

The following procedure should be used to fill a series loop Heatrim System (See Figure 6).

1. Close all zone valves except the one for the zone to be filled with water and purged of air.
2. Open the drain valve on the boiler.
3. Open the fill valve.
4. Close the purge valve.
5. Open the relief valve.
6. Open the valve to the second zone to be purged; then close the first Repeat this step until all zones have been purged of air and filled with water; but always have one zone open. (Zones are purged and filled when water can be felt in the pipe at the end of the zone).
7. Close the drain valve.
8. When water appears, release the lever on the relief valve, allowing it to close.
9. Continue filling the system until the pressure gauge reads 12 psi without heat; close the fill valve.
10. Open the purge valve.
11. For quietest operation, check the gauge pressure with the system at 200 F. Adjust the pressure to 25 psi if a 30 psi relief valve is employed and 40 psi when a 50 psi relief valve is used. If an automatic fill valve is used, it may be necessary to readjust the setting of the valve to allow a higher fill pressure with the system cold to obtain desired pressure with the system at 200 F.

Following the completion of the installation, a thorough check should be m of the entire hydronic system to locate possible leaks.

If a diaphragm-type expansion tank is used, it may be necessary to increas the initial air pressure in the tank with the system cold to insure adequa expansion volume. These tanks are usually fitted with a tire valve for th purpose.

GPH - 60 THRU GPH - 170

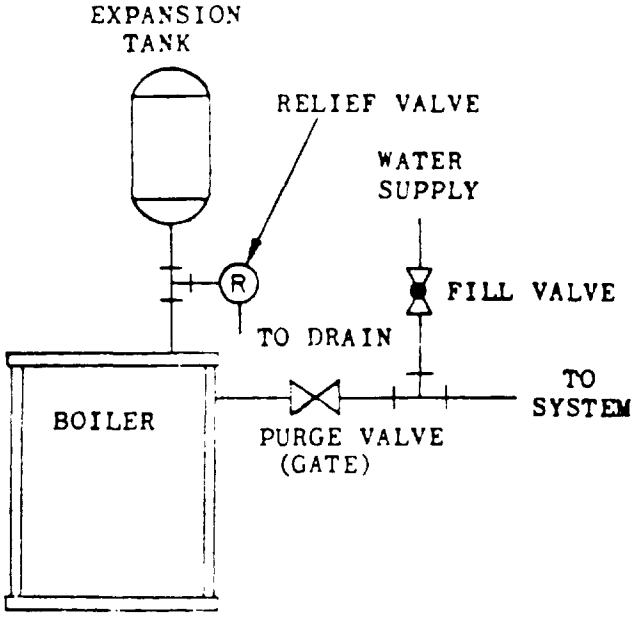

RECOMMENDED HOOK-UP USING CONVENTIONAL EXPANSION TANK

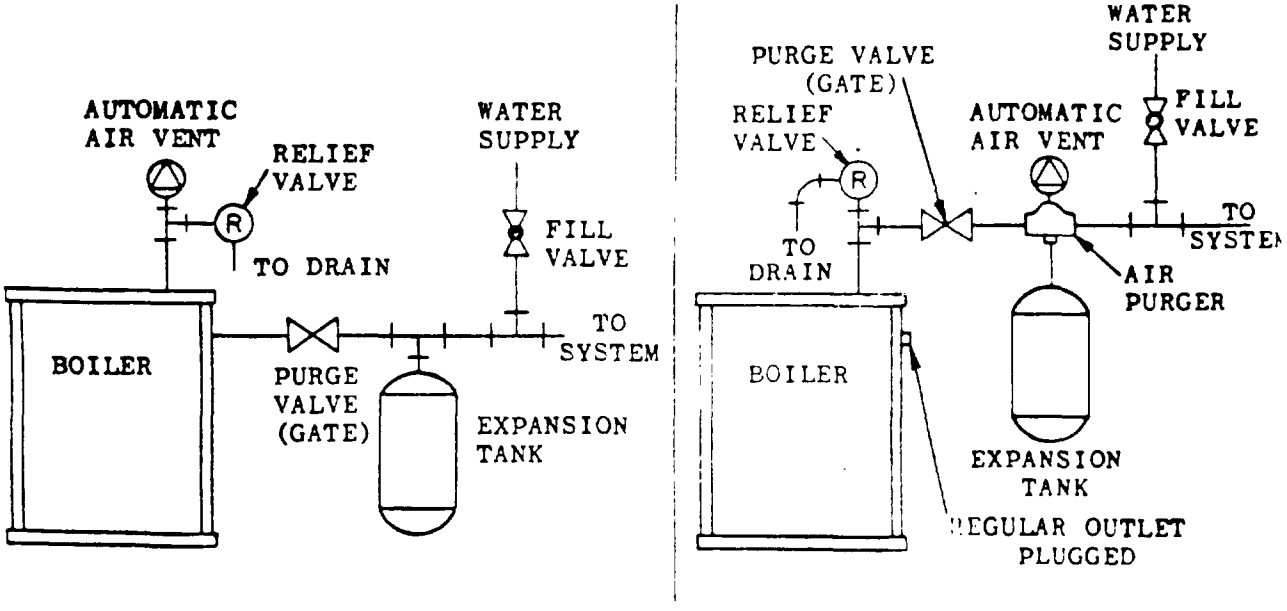

ALTERNATE HOOK-UPS USING DIAPHRAGM-TYPE EXPANSION TANKS

18798

If this boiler is used in connection with refrigeration systems, the boiler must be installed so that the chilled medium is piped parallel with the boiler, using appropriate valves to prevent the chilled medium from entering the boiler.

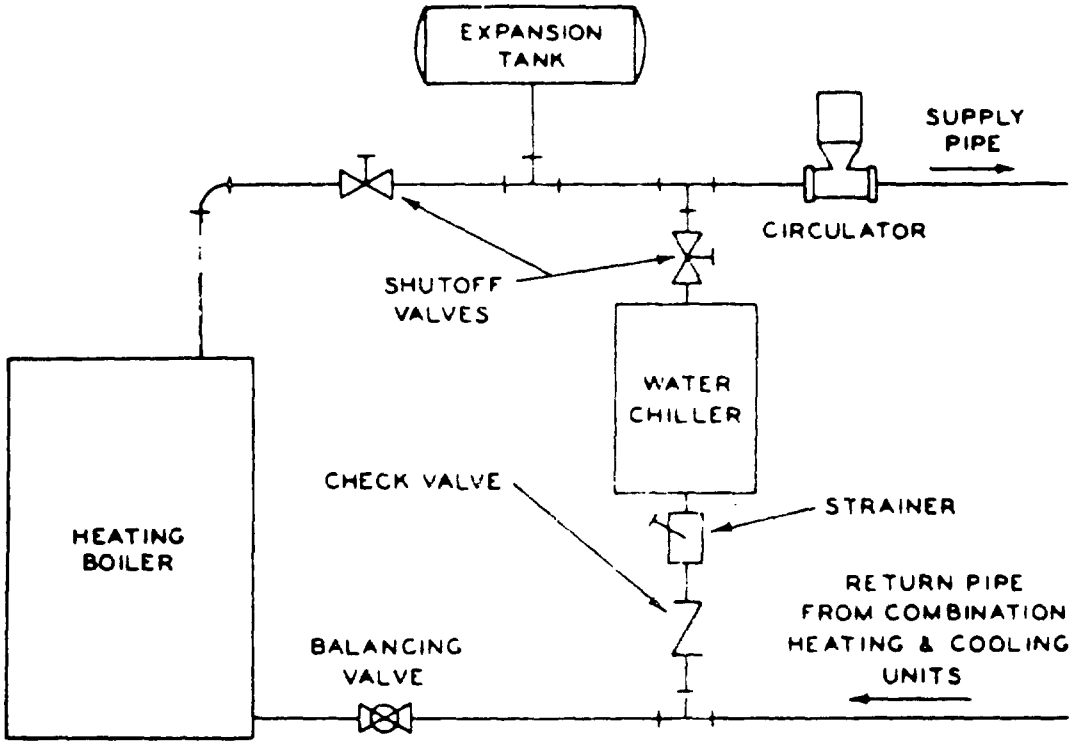

RECOMMENDED BOILER PIPING FOR
COMBINATION HEATING & COOLING UNITS

Fig. 7

If this boiler is connected to heating coils in an air handling unit where coils may be exposed to refrigerated air, the boiler piping system must be equipped with flow control valves to prevent gravity circulation of boiler water during the operation of the cooling system. That safeguard will help prevent condensation on the boiler and, therefore, corrosion damge.

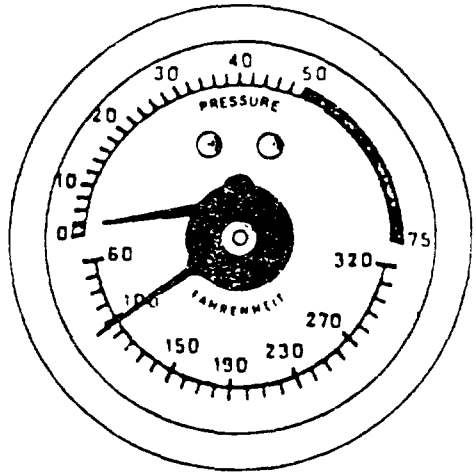

Fig. 8

OPERATION

The homeowner should occasionally check the readings on the gauge located on the front of the boiler. The lower scale indicates the water temperature within the boiler; and, should the water exceed 250 F, operation must be discontinued until the system is checked and the fault corrected. The upper scale indicates the pressure within the system and should not exceed 30 lbs (50 lbs with 50-lb relief valve).

In a closed system the boiler and piping are entirely filled with water except for a cushion of air in the upper portion of the expansion tank. When the water is heated, it expands, compressing the air. If, for any reason, this air were completely displaced from the tank, there would no longer be a cushion. In that event an increase in water temperatures would cause a corresponding increase in volume and pressure would force the relief valve open to discharge the excess volume. To correct such a condition, the expansion tank must be drained enough to permit the tank to fill with air.

The boiler is equipped with an adjustable limit control with a mechanical stop at 220 F. This setting can be reduced for lower system design temperatures.

INSTRUCTIONS FOR SHUTTING OFF AND LIGHTING

MANUAL IGNITION -100% SHUTOFF

24 VOLT OR SELF ENERGIZING

TO SHUT OFF:

1. DEPRESS THE MANUAL GAS COCK KNOB AND TURN TO "OFF".

TO LIGHT:

1. SET ROOM THERMOSTAT TO LOWEST TEMPERATURE.
2. BE SURE MANUAL GAS COCK KNOB HAS BEEN TURNED TO "OFF" POSITION FOR AT LEAST FIVE (5) MINUTES BEFORE PROCEEDING.
3. DEPRESS KNOB AND TURN TO "PILOT". LIGHT PILOT BURNER HOLDING KNOB DOWN APPROXIMATELY ONE MINUTE.
4. TURN KNOB TO "ON" AND SET THERMOSTAT TO DESIRED TEMPERATURE.

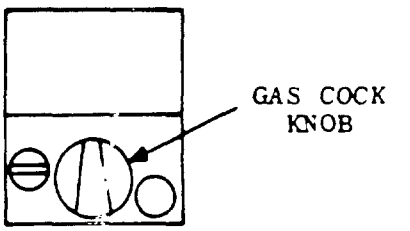

382850-317-906

PILOT REMOVAL & INSTALLATION

TO REMOVE:

PULL SPRING CLIP (1) TO RIGHT APPROX 1/2 INCH AND PULL PILOT ASSEMBLY OUT.

TO INSTALL

PULL SPRING CLIP (1) TO RIGHT AND PUSH PILOT ASSEMBLY IN MAKING SURE PILOT BRACKET FLANGE (2) SLIDES INSIDE VERTICAL WALL OF BURNER DRAWER AS SHOWN.

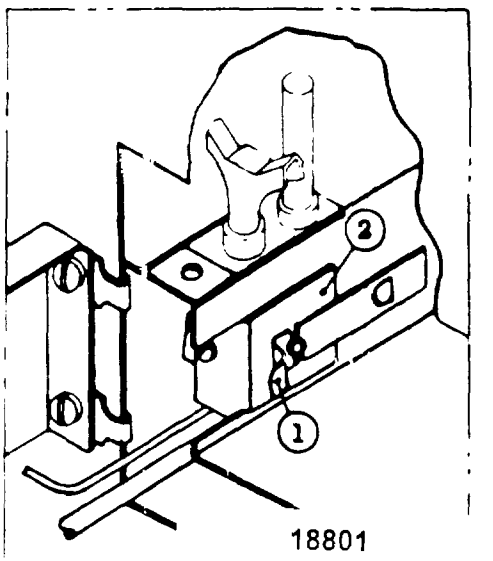

Normal Pilot Input (Per burner Btu/hr.)

Natural	1,400
Mixed	1,200
Liquid Petroleum (LP)	1,000

Manifold Pressure Adjustment for Main Burner

After the boiler has been in operation for fifteen minutes, all other gas appliances (including pilots) should be shut off and the consumption should be timed. The boiler input should be adjusted to the rated input, indicated on the nameplate attached to the boiler jacket, in accordance with the following procedure.

$$\text{Gas Consumption (Cubic Feet per Hour)} = \frac{\text{Input Rating (Btu/Hr.)}}{\text{Heating Value of Gas (Btu/Cu. Ft)}}$$

The manifold gas pressure should be checked with a manometer or pressure gage connected to the 1/8 pipe pressure tapping located either on the manifold or bottom of automatic gas valve.

The pressure should be set at 3.5 iwc for natural and mixed gas, [illegible] in no case, should the final manifold pressure vary more than 0.3 iwc either way. To adjust the pressure, the protective cap on the regulator should be removed and the adjusting screw should be turned clockwise to raise the pressure or counterclockwise to lower the pressure. The protective cap should be returned to its former position. Only small adjustments in gas flow may be made with this regulator; major changes in the flow must be made through modification of the burner orific

MAIN BURNER AIR ADJUSTMENT (See Page 14A)

The burner flame should be adjusted, by opening or closing the primary shutter, so that it burns quietly and so that it shows no yellow but has a noticeable blue inner cone. Following the adjustment, the screw should be tightened carefully to lock the shutter in the correct position.

OPERATION DURING ELECTRICAL POWER FAILURE

The GPH Boiler equipped with self-energizing controls will continue to provide heat without electrical power if the boiler is located below the heating system such as in a basement installation. THE BURNER FLAME SHOULD BE REDUCED DURING ELECTRICAL POWER FAILURES TO 1/3 or 1/4 ITS NORMAL SIZE through a partial closing of the manual shutoff valve. Although the burner equipped with self-energizing controls will continue to operate without adjustment and without damage to the boiler, the reduction in flame size will help offset the loss of the circulating action in maintaining an even but reduced heat. The shutoff valve should be returned to its normal position immediately upon the re-establishment of electric power if the most efficient and effective operation is to be obtained. Flow control valves should be opened during power failure operation. Upon resumption of power, return flow valves to original position.

BOILER CARE

It is good practice with any boiler to inspect it yearly and clean and adjust it, if necessary.

Cleaning

For maximum efficiency and safe operation, burners and boiler flue passages should be inspected and cleaned, if necessary, once a year.

Inspection procedure:

1. Turn manual gas control valve to off position.
2. Remove manifold cover on front of the boiler.
3. Remove burner access door (see Fig. 10) by pulling straight out.
4. Remove burners by lifting them at rear, push toward rear and then pull out.
5. Check burner gas ports to see that they are free of scale, lint and dirt. CLEANING BURNERS: Burners can be cleaned simply by blowing through ports and shaking foreign material out.
6. Section cleanliness can be checked with a mirror and light inserted in the opening where the burners have been removed.

Section Cleaning:

If section inspection reveals they are sooted or contain considerable scale, cleaning can be accomplished by the following steps (burners should be removed before cleaning sections):

1. Remove flue pipe, drafthood, jacket top, canopy, and baffle (no baffle on GPH-170).
2. Clean sections with flue brush (see Fig. 9).
3. Reassemble, making sure baffle is seated over pins in top section so that it is located properly.
4. Install burners and relight pilot.
5. Check burner operation (see Page 14a).

GPH-60 THRU GPH-170

Burner Adjustment

It is recommended that burner air adjustment be checked as follows:

Natural Gas - The most efficient operation is obtained with the air shutters adjusted to maximum opening.

Mixed Gas - Adjust air shutters to give inner flame height of approximately 1/4 to 1/2 inch with no yellow in flame.

LP (Bottled) Gas - LP burner flames must be adjusted properly to prevent excessive burner port temperatures. Adjust air shutter to give blue-green inner flame without any traces of yellow in flame. (see illustrations).

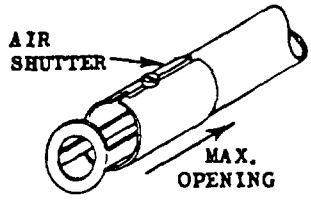

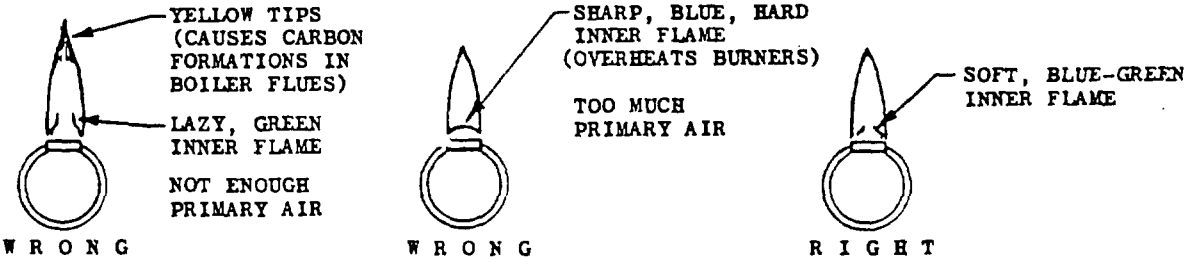

GPH-60 and 80

PERIODS OF NON-USE

When the boiler is out of operation for periods of any considerable length, the electricity and all gas connections may be shut off, although no damage would occur and very little operating cost would be involved if not shut off.

Under normal operating conditions THE HEATING SYSTEM SHOULD NEVER BE DRAINED; however, if the boiler is not used during the winter months, and if adequate protection is not supplied to avoid the possibility of water freezing anywhere in the system, the entire system should be drained.

GPH - 60 & 80 BOILERS

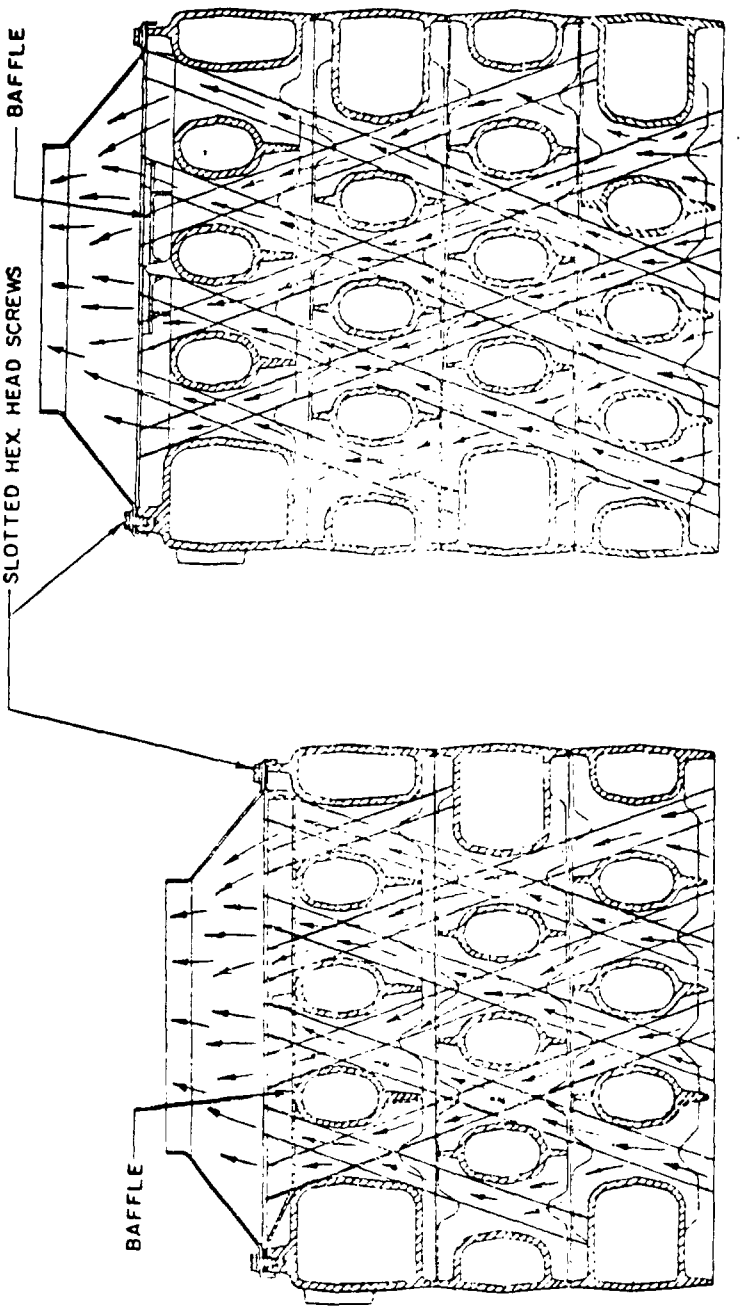

GPH - 80 BOILER
SHOWING FLUE TRAVEL
AND ACCESS FOR CLEANING

GPH - 60 BOILER
SHOWING FLUE TRAVEL
AND ACCESS FOR CLEANING

18805

GPH - 60 & 80 BOILERS

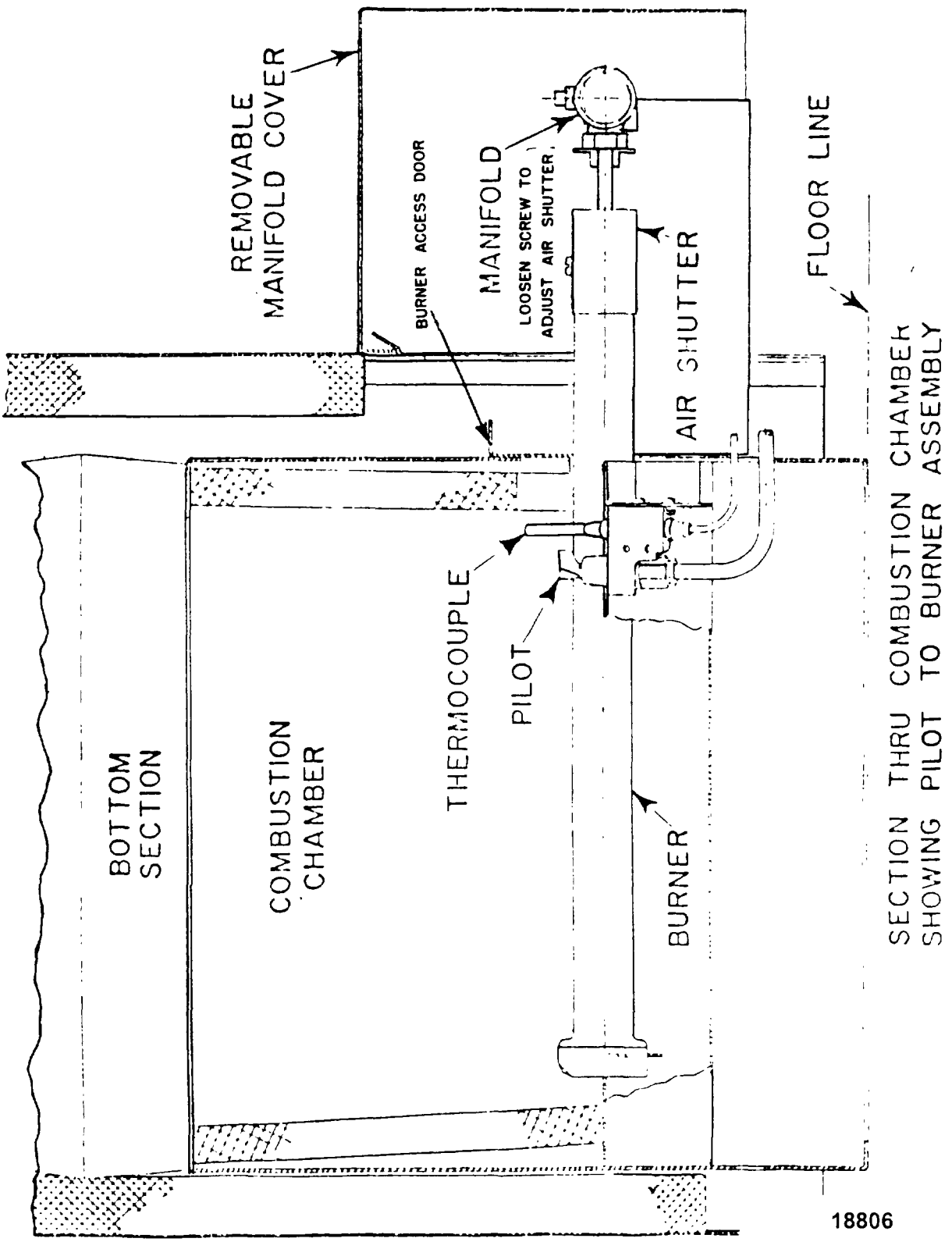

SECTION THRU COMBUSTION CHAMBER SHOWING PILOT TO BURNER ASSEMBLY