SERIES 1B-J2 Jack

PLAINTIFF'S EXHIBIT

ASI-666

G-6 GAS BOILER

by

AMERICAN-Standard

INSTALLATION–OPERATION AND MAINTENANCE MANUAL

APPROVED BY AMERICAN GAS ASSOCIATION

NOTICE TO INSTALLER AND OPERATOR
THIS BOOKLET MUST BE AFFIXED ON
OR ADJACENT TO THE HEATING EQUIPMENT

AMERICAN-Standard

First in heating . . . first in plumbing

19096

G6 VOID

GENERAL DIMENSIONS

FOR 6 TO 11 SECTION BOILERS

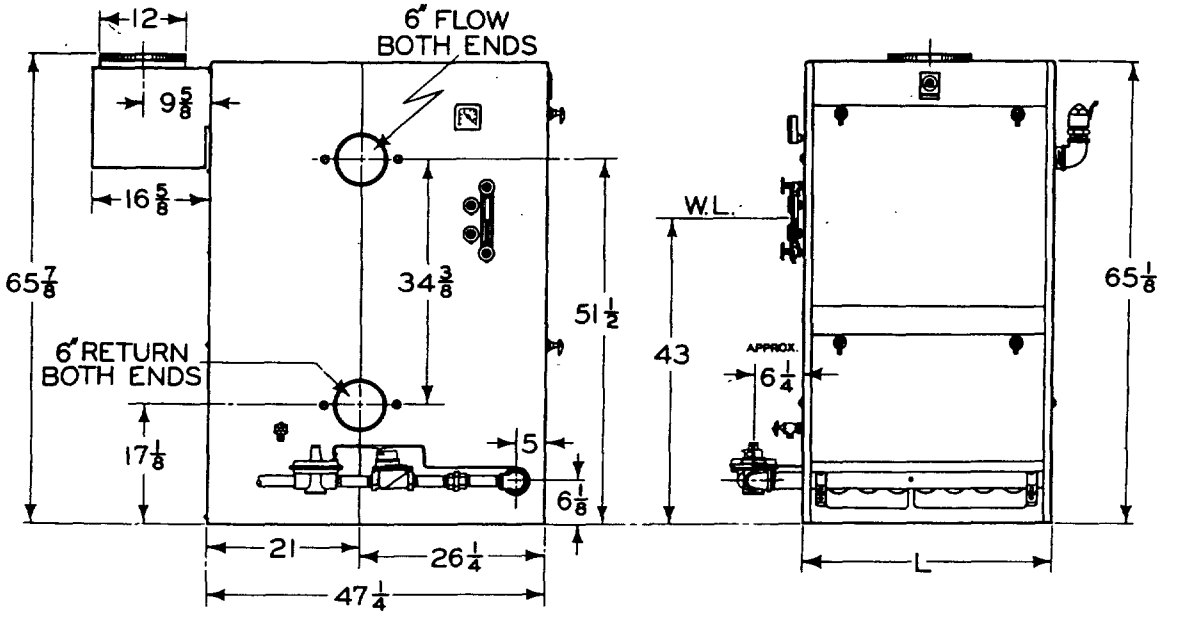

BOILER NUMBER	No. OF SECTIONS	No. OF BURNERS	L	SIZE GAS CONNECTION	
				NAT., MIXED, BUTANE & PROPANE & 800 TO 1400 L.P. AIR	MANUFACTURED AND 525 TO 800 L.P. AIR
G-66	6	5	27 1/8	1 1/4	1 1/2
G-67	7	6	31 1/4	1 1/4	2
G-68	8	7	35 3/8	1 1/4	2
G-69	9	8	39 1/2	1 1/4	2
G-610	10	9	43 5/8	1 1/2	2
G-611	11	10	47 3/4	1 1/2	2

GENERAL DIMENSIONS

FOR 13 TO 41 SECTION BOILERS

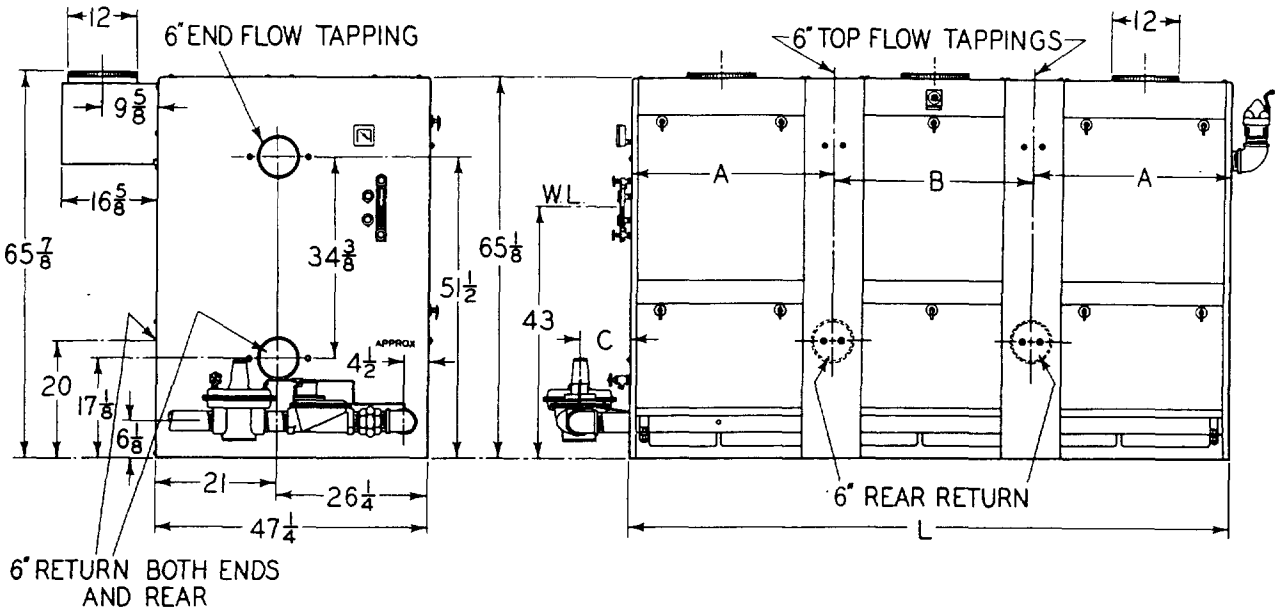

BOILER NUMBER	No. OF SECTIONS	No. OF BURNERS	No. OF DRAFTHOODS	No. OF FLUE OUTLETS	A	B	C (APPROX.)	L	NUMBER AND SIZE GAS CONNECTION	
									NAT., MIXED, BUTANE & PROPANE & 800 TO 1400 L.P. AIR	MANUFACTURED AND 525 TO 800 L.P. AIR
G-613	13	12	2	2	31 1/8	—	6 1/2 TO 8 3/8	62 1/4	1-2"	1-2 1/2"
G-615	15	14	2	2	35 1/4	—		70 1/2	1-2"	1-2 1/2"
G-617	17	16	2	4	39 3/8	—		78 3/4	1-2"	1-2 1/2"
G-619	19	18	2	4	43 1/2	—		87	1-2 1/2"	1-3"
G-621	21	20	2	4	47 5/8	—		95 1/4	1-2 1/2"	1-3"
G-622	22	21	3	3	35 1/4	35 1/8		105 5/8	1-2 1/2"	1-3"
G-625	25	24	3	6	39 3/8	39 1/4		118	1-2 1/2"	1-3"
G-628	28	27	3	6	43 1/2	43 3/8		130 3/8	1-3"	1-3"
G-631	31	30	3	6	47 5/8	47 1/2		142 3/4	1-3"	2-2 1/2"
G-633	33	32	4	8	39 3/8	39 1/4		157 1/4	1-3"	2-2 1/2"
G-637	37	36	4	8	43 1/2	43 3/8		173 3/4	1-3"	2-3"
G-641	41	40	4	8	47 5/8	47 1/2		190 1/4	1-3"	2-3"

DRAFT HOOD OUTLET DIMENSIONS
FOR 6 TO 41 SECTION BOILERS

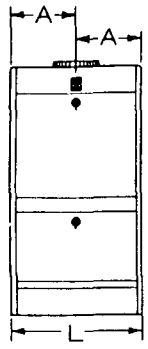

6-7-8 SECTIONS

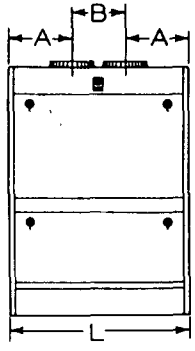

9-10-11 SECTIONS

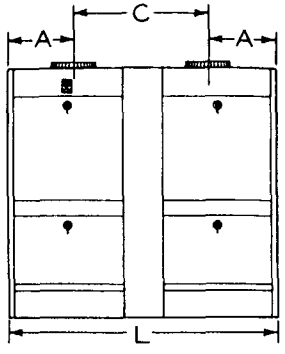

13-15 SECTIONS

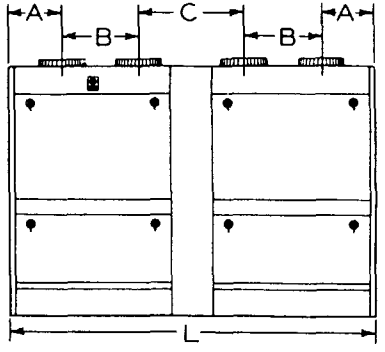

17-19-21 SECTIONS

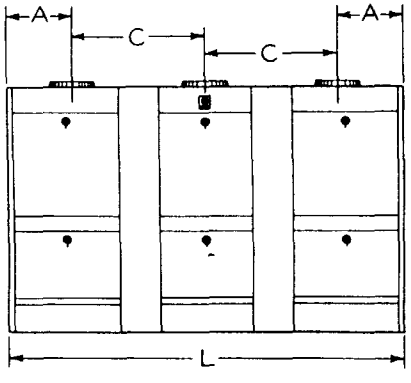

22 SECTIONS

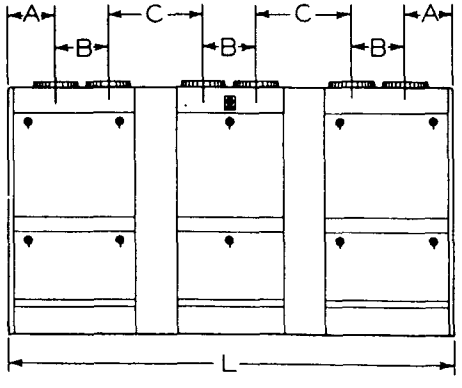

25-28-31 SECTIONS

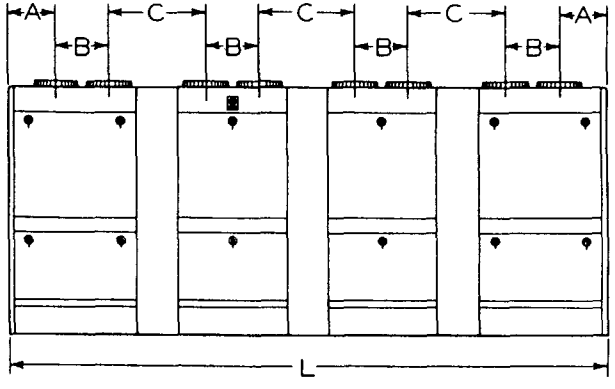

33-37-41 SECTIONS

DIMENSIONS FOR DRAFT HOOD OUTLETS

No OF SECTIONS	6	7	8	9	10	11	13	15	17	19	21	22	25	28	31	33	37	41
No. OF FLUE OUTLETS	1	1	1	2	2	2	2	2	4	4	4	3	6	6	6	8	8	8
A	13 9/16	15 5/8	17 11/16	12 3/4	13 13/16	13 7/8	15 5/8	17 11/16	12 3/4	13 13/16	13 7/8	17 11/16	12 3/4	13 13/16	13 7/8	12 3/4	13 13/16	13 7/8
B	—	—	—	14	16	20	—	—	14	16	20	—	14	16	20	14	16	20
C	—	—	—	—	—	—	31	35 1/8	25 1/4	27 3/8	27 1/2	35 1/8	25 1/4	27 3/8	27 1/2	25 1/4	27 3/8	27 1/2
L	27 1/8	31 1/4	35 3/8	39 1/2	43 5/8	47 3/4	62 1/4	70 1/2	78 3/4	87	95 1/4	105 5/8	118	130 3/8	142 3/4	157 1/4	173 3/4	190 1/4
MINIMUM EQUIVALENT DIAMETER OF FLUE HEADER				14	16	16	18	18	20	20	22	22	24	24	26	26	30	30

ERECTING

CAUTION

On hot water systems, expansion tank should not be installed in cold or exposed place. If the pipe leading to or from the tank freezes, serious damage may result. If valve of any description is installed in the piping leading to or from the expansion tank BE SURE THAT IT IS OPEN WHILE THE BOILER IS IN OPERATION.

LOCATION

If water condition is encountered in basement, or if it has been necessary to waterproof the basement floor, boiler should be mounted on concrete or hollow tile base at least 3 inches above floor level.

NOTE: All references to Right or Left parts refer to observer's right or left when facing front of boiler.

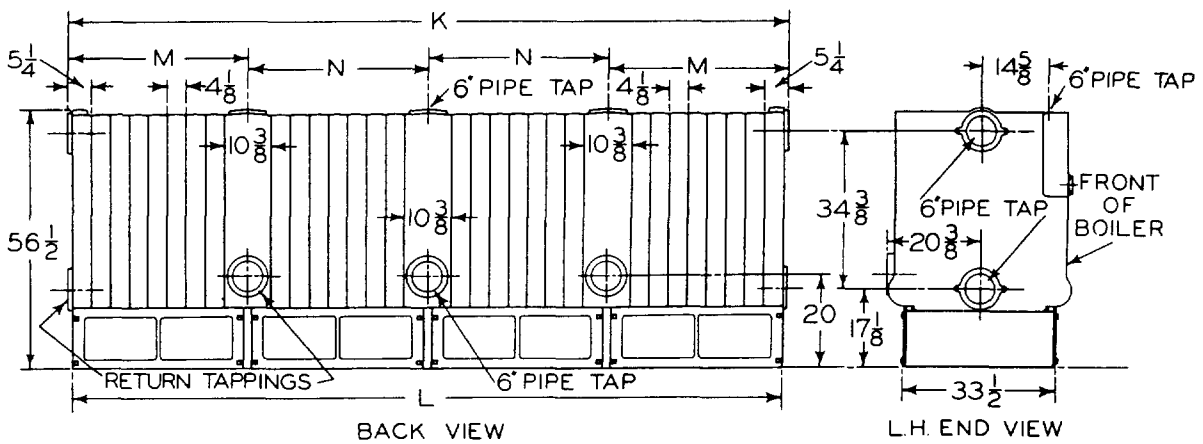

Layout Of Flow And Return Tappings

BOILER NUMBER	L	K	M	N	No. OF SECTIONS			No. OF TOP FLOW TAPPINGS	No. OF END FLOW TAPPINGS	No. OF BACK RETURN TAPPINGS	No. OF END RETURN TAPPINGS
					ENDS	INTER MEDIATES	CENTERS				
G-66	25	27	—	—	2	0	4	0	2	0	2
G-67	29 1/8	31 1/8	—	—	2	0	5	0	2	0	2
G-68	33 1/4	35 1/4	—	—	2	0	6	0	2	0	2
G-69	37 3/8	39 3/8	—	—	2	0	7	0	2	0	2
G-610	41 1/2	43 1/2	—	—	2	0	8	0	2	0	2
G-611	45 5/8	47 5/8	—	—	2	0	9	0	2	0	2
G-613	60 1/8	62 1/8	31 1/16	—	2	1	10	1	2	1	2
G-615	68 3/8	70 3/8	35 3/16	—	2	1	12	1	2	1	2
G-617	76 5/8	78 5/8	39 5/16	—	2	1	14	1	2	1	2
G-619	84 7/8	86 7/8	43 7/16	—	2	1	16	1	2	1	2
G-621	93 1/8	95 1/8	47 9/16	—	2	1	18	1	2	1	2
G-622	103 1/2	105 1/2	35 3/16	35 1/8	2	2	18	2	2	2	2
G-625	115 7/8	117 7/8	39 5/16	39 1/4	2	2	21	2	2	2	2
G-628	128 1/4	130 1/4	43 7/16	43 3/8	2	2	24	2	2	2	2
G-631	140 5/8	142 5/8	47 9/16	47 1/2	2	2	27	2	2	2	2
G-633	155 1/8	157 1/8	39 5/16	39 1/4	2	3	28	3	2	3	2
G-637	171 5/8	173 5/8	43 7/16	43 3/8	2	3	32	3	2	3	2
G-641	188 1/8	190 1/8	47 9/16	47 1/2	2	3	36	3	2	3	2

ASSEMBLY OF BASE

For 6 to 11 section boilers—Bolt front and rear base frames to right and left hand base side panels with ribs inside. Word "TOP" is cast on all base panels to indicate correct position.

Be sure that corners of base are square, then level base with front in final position with regard to chimney. See Fig. 1

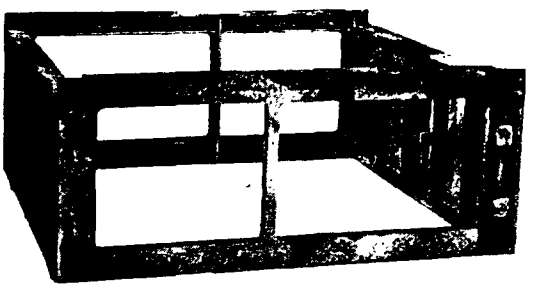

FIG. 1—Base Assembly—6 To 11 Section Boilers

Attach two end section stop blocks on end of base from which assembly is started with 5/16" x 1¼" bolts, making nuts finger tight only and leaving blocks in horizontal position temporarily. See Fig. 3

For 13 to 41 section boilers—Select base spacers from boiler parts, two for 13 to 21 sections; four for 22 to 31 section; and six for 33 to 41 section boilers. Bolt two spacers between the flat sides of two base side panels so that they are flush at the bottom. Assemble all spacers and side panels required for the boiler using ½" x 3" bolts provided.

Assemble front and rear base frames to bolted side panel assemblies, then assemble a base side panel on each end. Draw bolts only moderately tight. Be sure that corners of base are square, then level base with front in final position with regard to chimney and draw all bolts up tight. See Fig. 2

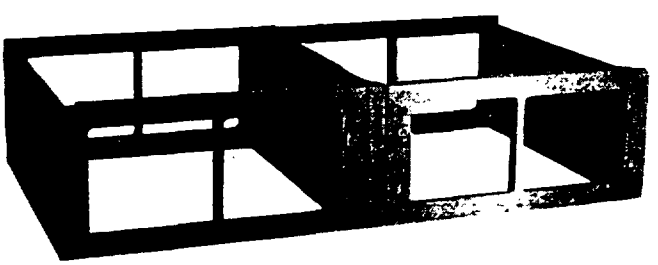

FIG. 2—Base Assembly—13 To 41 Section Boilers

Attach two end section stop blocks on end of base from which assembly is started with 5/16" x 1¼" bolts, making nuts finger tight only and leaving blocks in horizontal position temporarily. See Fig. 3

ASSEMBLY OF SECTIONS

1. Select either right end section (less ½" gauge and trim tappings) or left end section (with ½" gauge and trim tappings) and place on base with flat outside face flush with outside of side panel (cleanout opening to front of boiler). Support with wood prop. Turn stop blocks up to vertical position and tighten nuts. This operation is important to make sure that end section does not move off of the base during subsequent section assembly operations. See Fig. 3

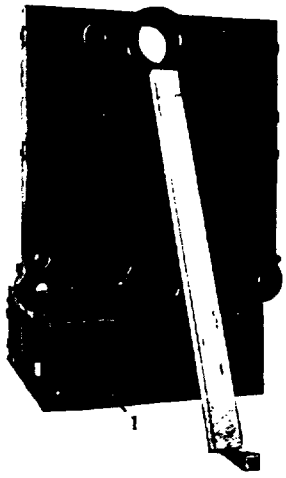

1. Stop Block

FIG. 3—Mounting End Section

2. Clean nipples and nipple openings with kerosene or gasoline and apply a thin film of good lubricating oil. Do not use paint or red lead.

3. Drive nipples squarely into end section using block of wood and hammer or preferably an aluminum headed hammer, if available. Gauge nipples in both directions to insure that they are driven squarely and to proper depth in nipple openings; nipple setting gauge is provided for this purpose. Cutout in gauge should rest on both sides of nipple when legs of gauge are touching finished ribs on section. Most nipple leaks are caused by tilted or cocked nipples. See Figs. 4 and 5



1. Nipple Gage

FIG. 4—Gaging Nipple

4. Paint ground bead around outside edges of section only, with red lead.

5. Place center section on base with cleanout openings to front and engaging nipples in the end section. Drive sections together with heavy block of wood, striking sections squarely as possible over nipple ports.

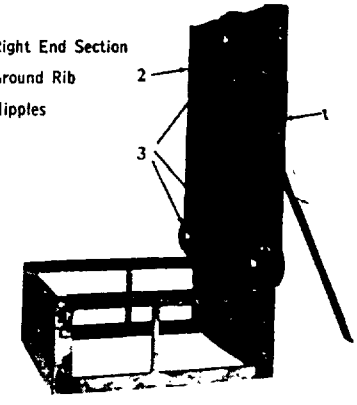

FIG. 5—Starting Assembly

6. For 6 to 11 Section Boilers—Insert one tie rod through each bolt hole above lower nipple ports and one tie rod through upper nipple port. Place assembling blocks on upper rod and assembling washers on lower rods as shown and place nuts and washers on all rods. See Fig. 6

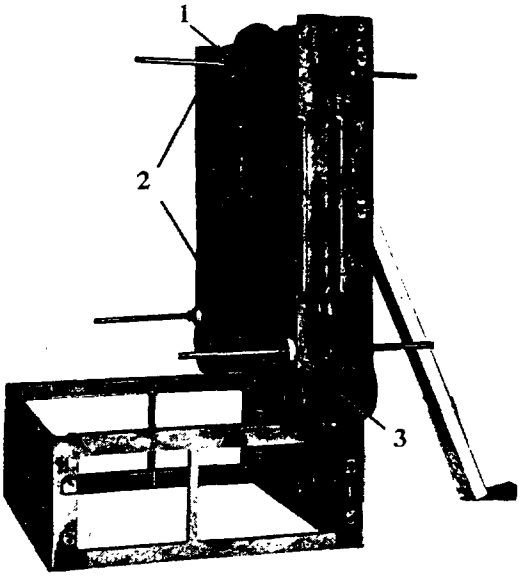

1. Assembling Block
2. Tie Rods
3. Assembling Washer

FIG. 6—Assembling Sections

For 13 to 41 Section Boilers—Use assembling clamps with loose jaws against end section in place of block, nuts and washers. Place clamps on rods with flat side against section. Insert jaws in blocks with serrated end against rod and draw up on rod from opposite end. Tap jaw lightly to tighten grip on rod. Do not permit jaws to clamp on threads. Place nuts and washers on other end. See Fig. 7

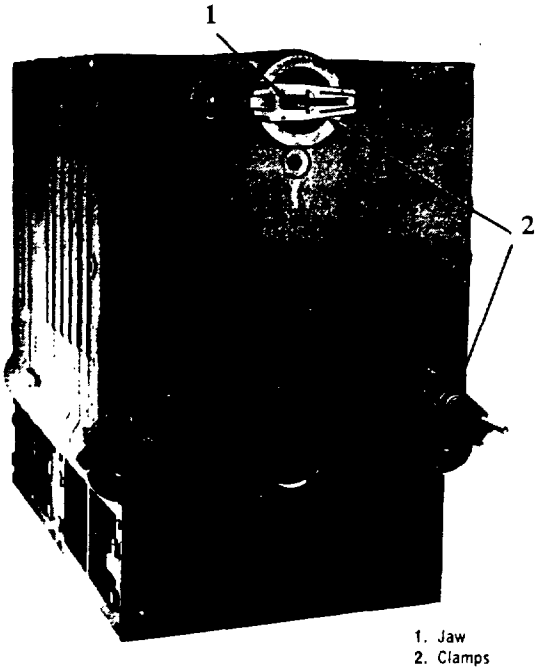

1. Jaw
2. Clamps

FIG. 7—Assembling Clamps

7. All Sizes—Draw up evenly on all tie rods starting with lower tie rods. Tighten nuts alternately and bump sections with heavy block of wood at nipple ports to facilitate assembly. Continue to draw up alternately until sections make contact at ground joints. Apply oil or grease freely to tie rod threads while assembling sections to prevent stripping of threads on rods.

Paint ground rib of each section with red lead and continue assembling sections ONE AT A TIME until all center sections are assembled.

8. For 13 to 41 Section Boilers—Continue to assemble sections until ready for intermediate (thick) section, then lengthen tie rods with couplings provided. Repeat this operation as each intermediate section is assembled. See Fig. 8

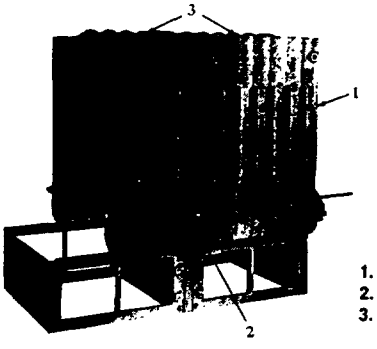

1. Right End Section
2. Intermediate Section
3. Center Section

FIG. 8—Assembling Larger Boilers

9. Remove upper tie rod and assembling blocks. Remove nuts and washers from lower rods. In case of 13 to 41 section, also remove clamps. Place remaining end section in position and insert tie rods through all tie rod holes in sections. Draw sections together as in previous operations until all ground joints are tight. Back off all tie rod nuts until they are finger tight only. Rods must not project beyond large tapping bosses to avoid interference with jacket.

TESTING

Before connecting boiler, plug openings, fill boiler with water and subject to not less than 10 lbs. nor more than 30 lbs. pressure. Inspect boiler inside and outside for leakage as a result of breakage from handling and shipping. To safeguard accuracy of gauge and controls supplied with boiler do not install until after test of the boiler. This precaution of testing the boiler will simplify handling of any necessary replacements or adjustments and assist in treating with claims against transportation companies. After test, drain and remove plugs where required.

ASSEMBLY OF PLATEWORK, MAIN BURNERS AND MANIFOLD

1. Screw short threaded end of brass studs into tapped bosses in recesses between sections and attach cleanout cover plates to front of boiler.

Putty openings between plates and sections. Putty outside of sections at joints with boiler putty.

2. Place burner support in position between lugs provided on inside of base frame side panels. See Fig. 9

3. Attach manifold support brackets to front base frame with 3/8" cap screws provided.

4. See that orifices in ends of orifice holders assembled in manifold are screwed in tight and that orifices are drilled to size specified on tag attached to manifold.

Place manifold on brackets and attach bracket caps with 5/16" bolts provided. Leave set screws loose in bracket caps.

5. Place air shutters on orifice holders with adjusting screws toward outside.

6. Starting at either end of base, place each mixer tube firmly on its orifice holder and on the burner support. Place burners on mixer tubes. Ends of burners with two tapped holes for pilot brackets should face the front. See that burners are straight and level when assembly is complete. Tighten set screws in manifold brackets. See Fig. 10

For 13 to 41 Section Boilers—Couple manifolds at unions as required. See that orifice holders are in straight line before placing manifold assembly in the brackets and installing bracket caps. See Fig. 11

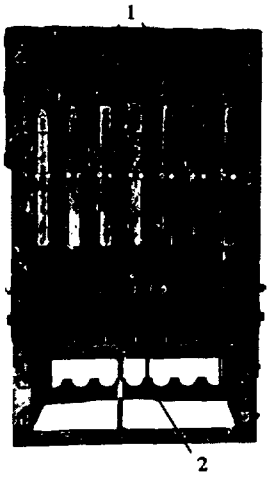

FIG. 9—Section Assemblage

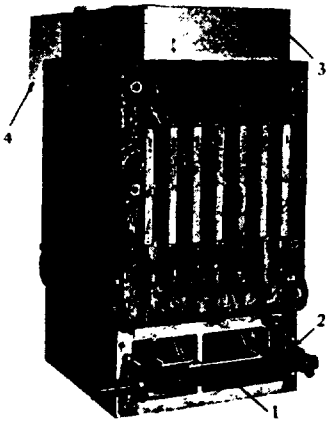

FIG. 10—Burners, Manifold, Canopy And Drafthood Assembled

PILOT BURNERS

Attach pilot burner assemblies to main burners. When one pilot burner with vent tube assembly is supplied, it should be attached to the third burner from the left end in all cases. If two pilot burner and vent tube assemblies are supplied, the second assembly should be attached to the third burner from the right end. See Figs. 12, 13, 14, 15, 16, 17, 18 and 19 for pilot installations covering all boiler assemblages for various types of gases.

For Electric Ignition—The pilot lighter assembly is furnished in separate container. It should be installed before the burner assembly is placed in the boiler. To install the lighter assembly, place it in position with the end of the thermocouple through the hole and push downward until the spring clip engages the bottom of the pilot body. See Fig. 14

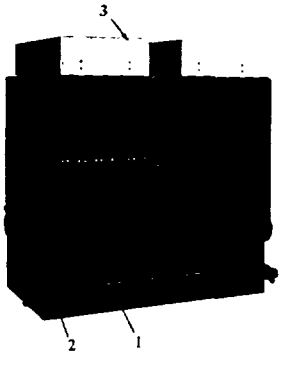

FIG. 11—Manifold Assembly—Larger Boilers

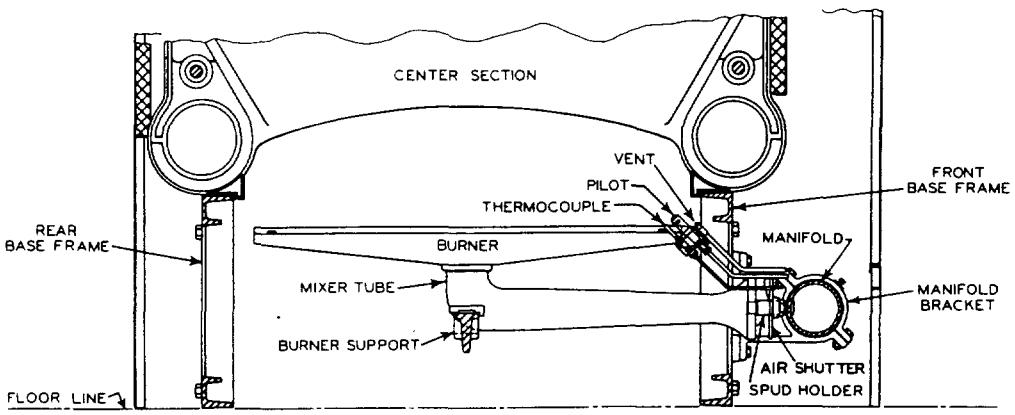

FIG. 12—Burner Installation—Pilot Burner, Thermocouple And Vent Tube

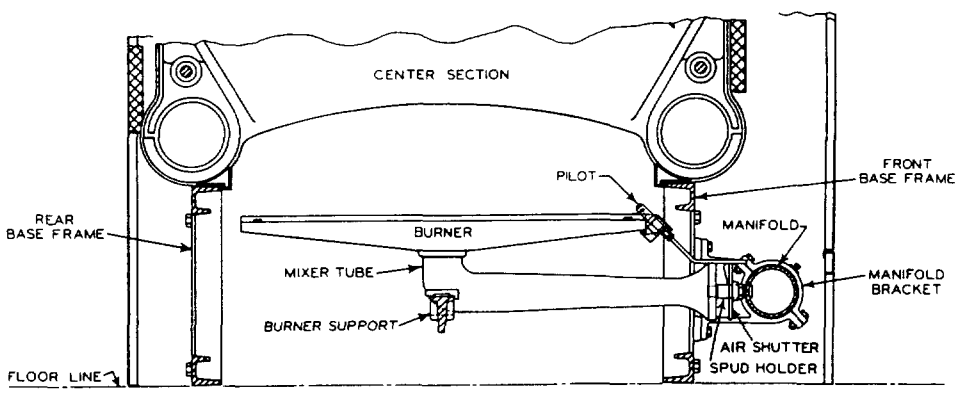

FIG. 13—Burner Installation—Auxiliary Pilot Burner

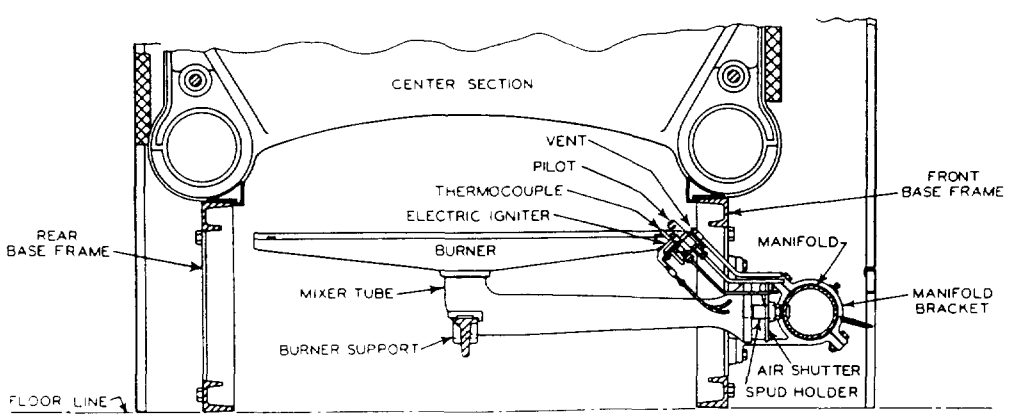

FIG. 14—Burner Installation—Pilot Assembly For Electric Ignition

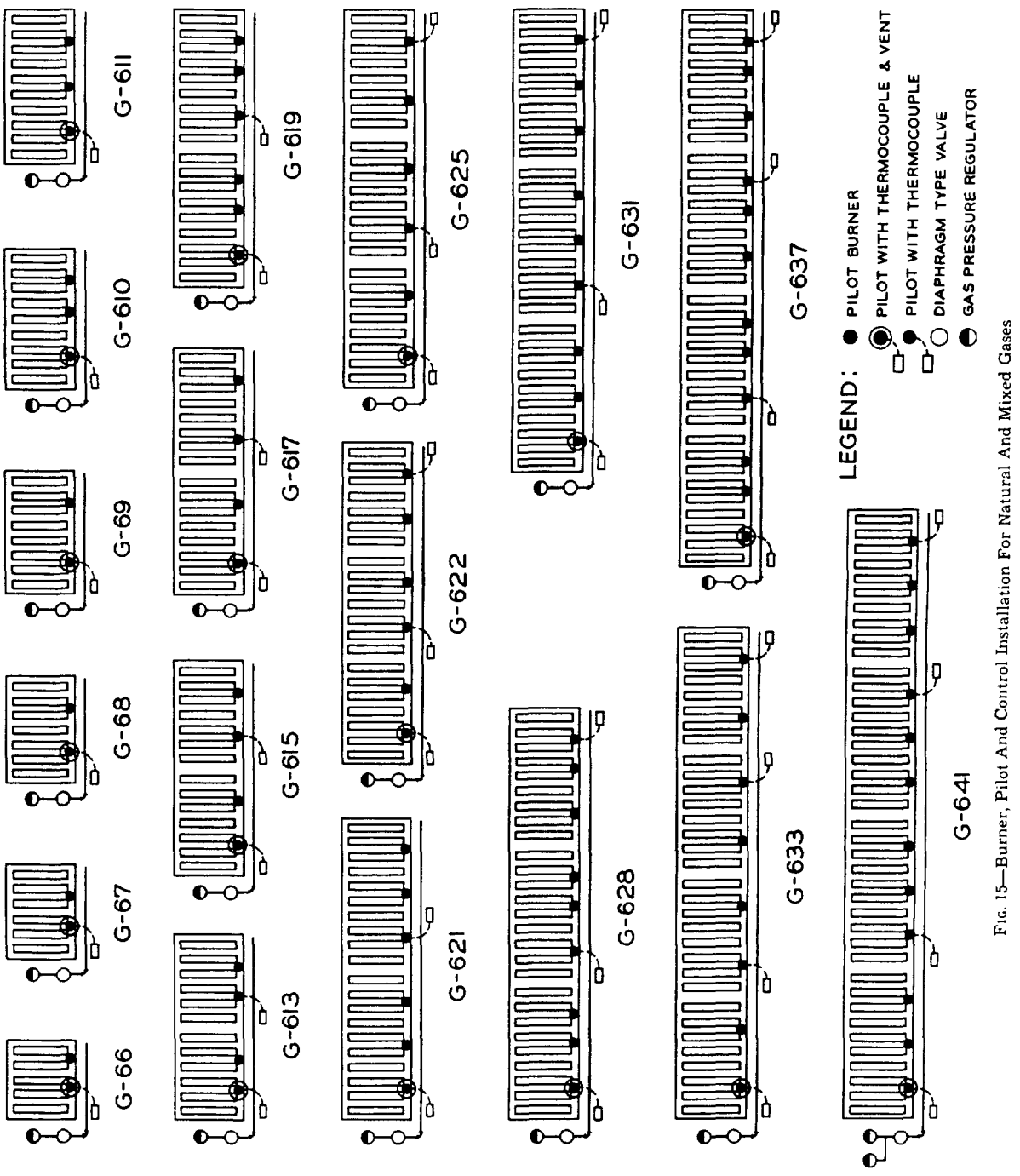

Fig. 15—Burner, Pilot And Control Installation For Natural And Mixed Gases

19107

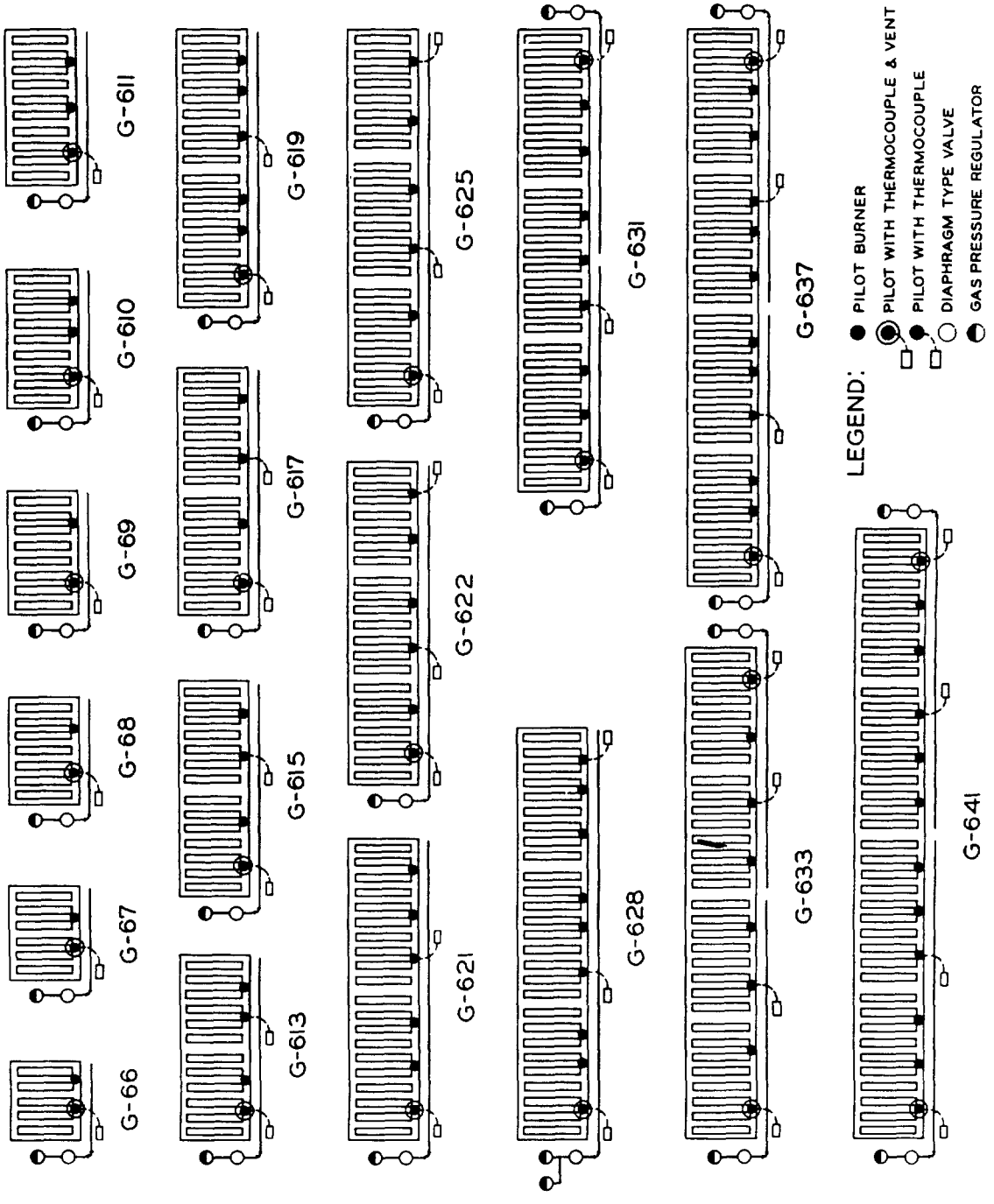

Fig. 16—Burner, Pilot And Control Installation For Manufactured Gas

19108

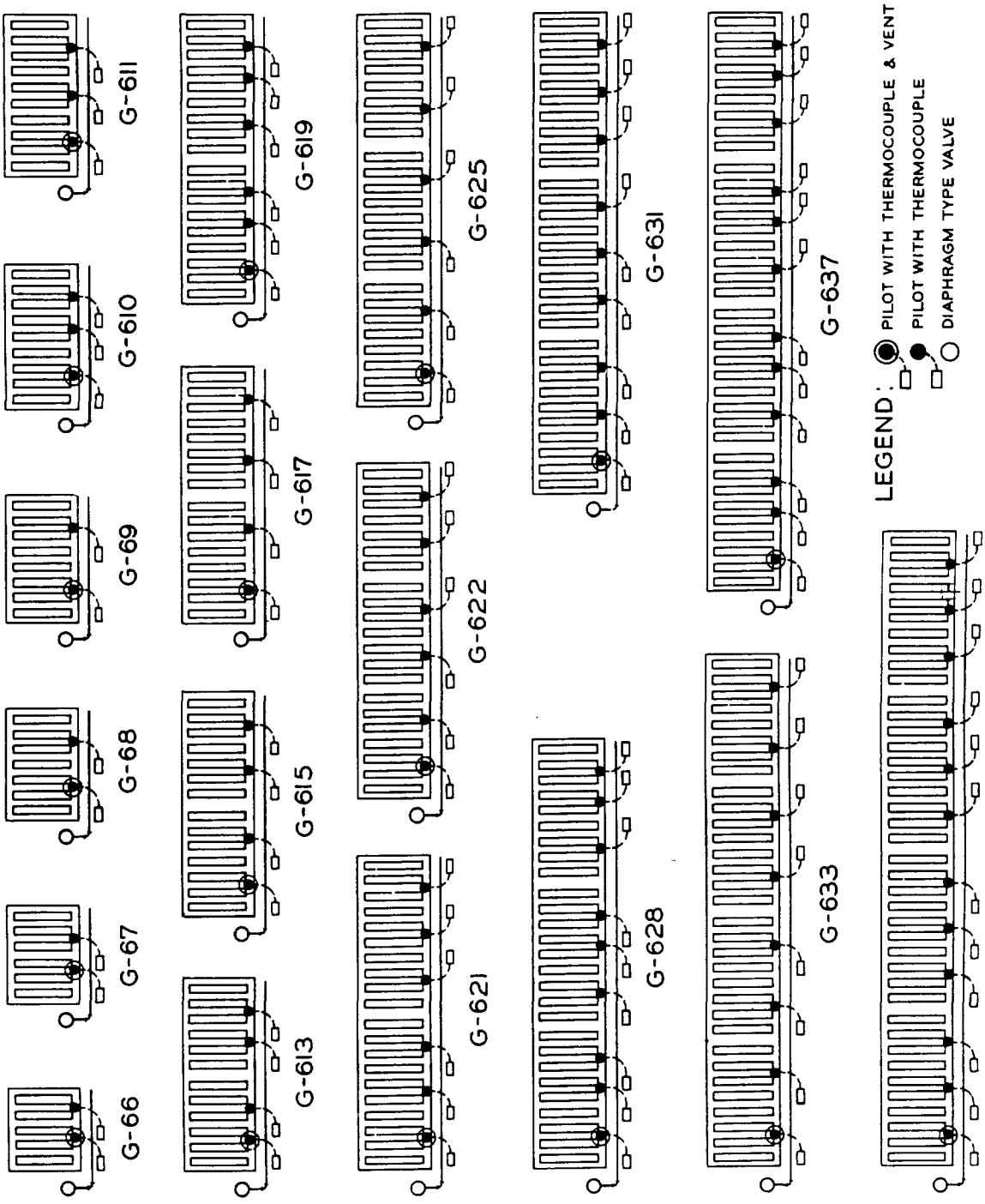

19109

Fig. 17—Burner, Pilot And Control Installation For LP Gas

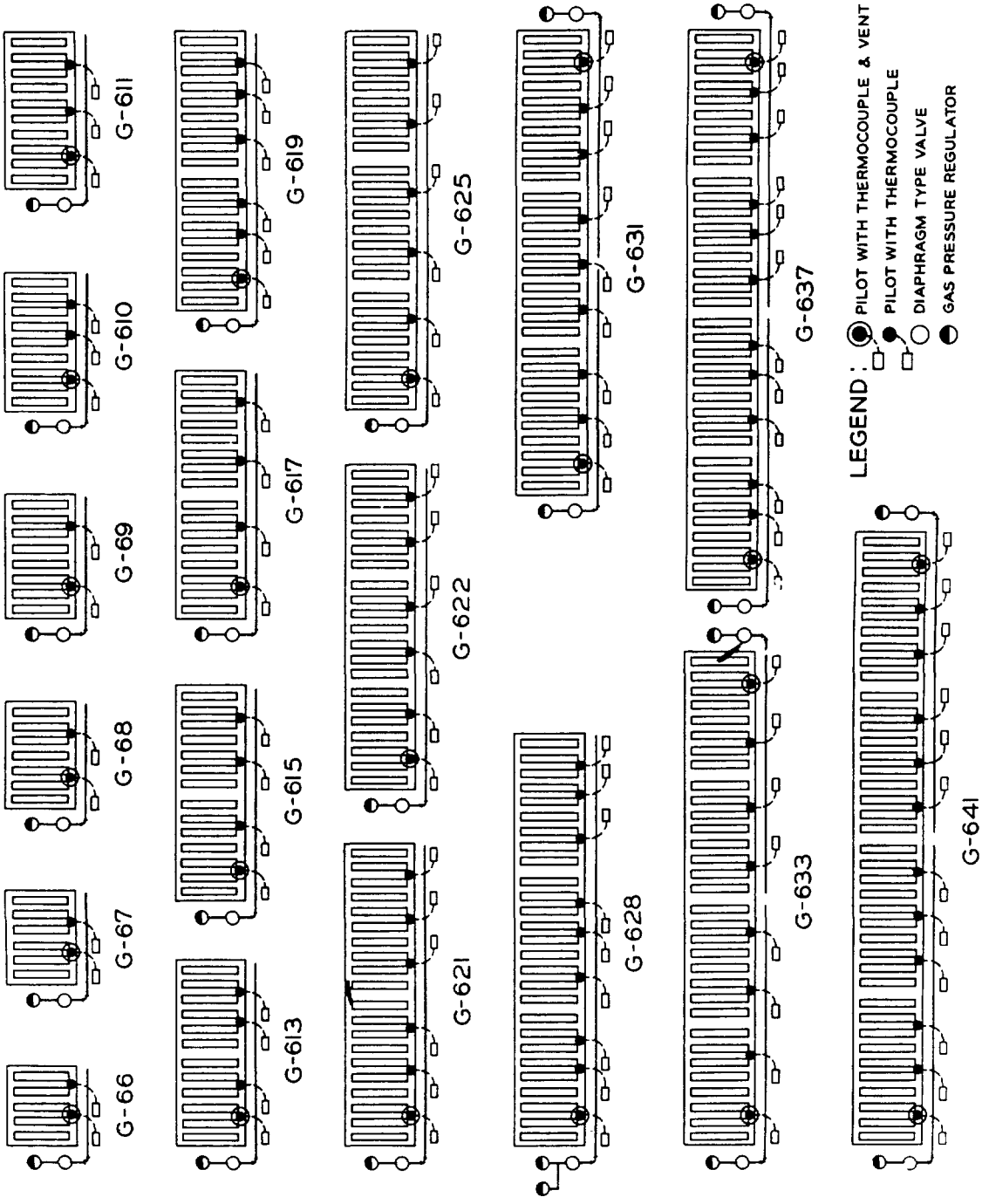

FIG. 18—Burner, Pilot And Control Installation—100% Shutoff—Mfd. And 525-800 LP-Air Gases

19110

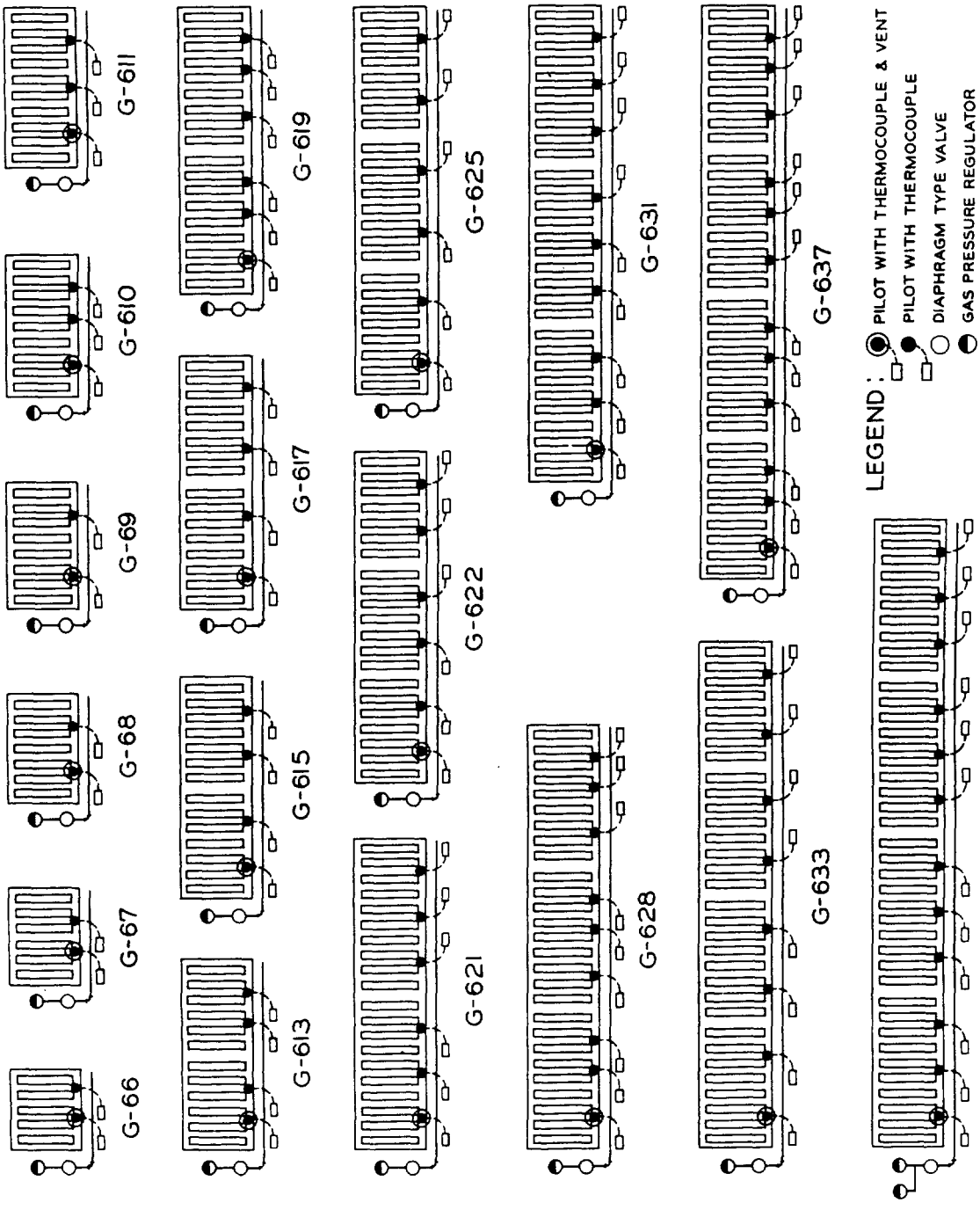

Fig 19—Burner, Pilot And Control Installation—100% Shutoff—Nat., Mixed And 800-1400 LP-Air Gases

ASSEMBLY OF JACKET, CONTROLS AND WIRING

For 6 to 11 Section Boilers

1. Attach canopy hooks to front of canopy with four ¼"—20x½" washer head screws.

2. Place canopy on the boiler with the canopy hooks engaging hook lugs cast in flueways on center sections and seal between outside of canopy and sections with boiler putty. See Fig. 20

3. Assemble drafthood to canopy with four #10x½" sheet metal screws.

4. Assemble the three pieces of the front liner panel with sheet metal screws. Remove necessary knockouts for controls either for steam or water boiler as required. Attach terminal block, instruction plate, number and series plate and baso pilot switch (or switches) to panel. Also attach Ignition Transformer in case of boilers equipped for Electric ignition.

Attach the front liner panel assembly to the tapped bosses on the end sections and install controls. See Fig. 21 Controls for steam boilers are shown.

Install control wiring to accord with wiring diagram supplied.

5. Assemble front half of left side jacket panel after removing knockouts for water column trim in case of STEAM BOILERS.

6. Assemble front half of right side jacket panel.

7. Assemble two front cross ties, center and bottom, then place back panel in position. See Fig. 22

8. Assemble upper front jacket panel. IMPORTANT! The top flange must be inserted under top flange of the side panels.

9. Assemble rear half of left side jacket panel.

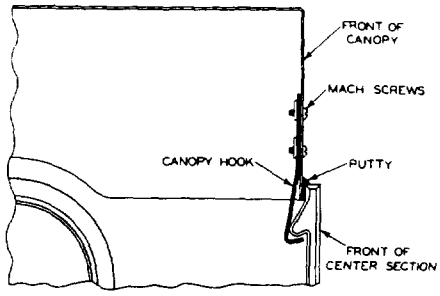

METHOD OF HOLDING CANOPY TO BOILER

FIG. 20—Installation Of Canopy

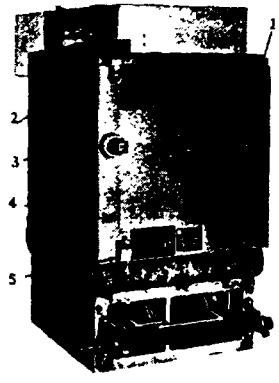

1. Front Liner with Cleanout Door
2. Steam Limit Control (Steam Boilers) or Immersion Operating Control (Water Boilers)
3. Low Water Cutoff
4. Terminal Block
5. Baso Automatic Pilot Switch

FIG. 21—Front Liner And Controls Installed

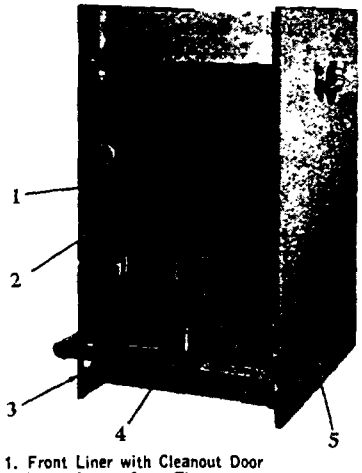

1. Front Liner with Cleanout Door
2. Front Center Cross Tie
3. Left Hand Side Panel
4. Front Bottom Cross Tie
5. Right Hand Side Panel

FIG. 22—Side Panels Installed

10. Assemble rear half of right side jacket panel. See Fig. 23

11. Assemble back panel to side panels. Assemble back filler pieces, one on each side of drafthood.

12. Assemble top panel.

For 13 to 41 Section Boilers

1. Attach canopy hooks to front of canopies with four ¼"—20x½" washer head screws.

2. Place canopies on the boiler with the canopy hooks engaging hook lugs cast in flueways on center sections and seal between outside of canopies and sections with boiler putty.

3. Assemble the three pieces of the front liner panels with sheet metal screws. Remove necessary knockouts for controls either for steam or water boiler as required. Attach terminal block, instruction plate, number and series plate and baso pilot switch (or switches) to panels.

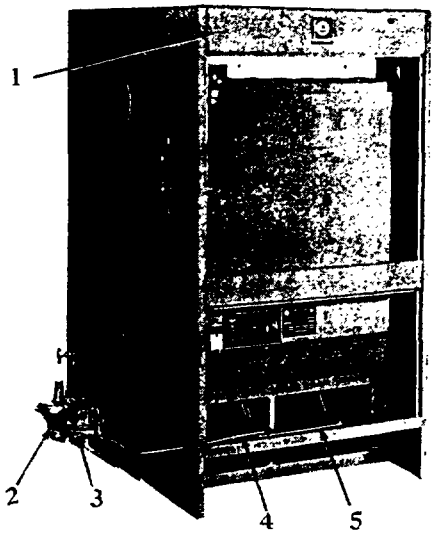

1. Upper Frunt Panel
2. Gas Pressure Regulator
3. Automatic Gas Valve
4. Vent Tube
5. Pilot Tube

FIG. 23—Assembling Jacket And Controls

4. Attach the front liner panel assemblies to the tapped bosses on the intermediate and end sections. Liner with terminal block and instruction plate is installed at the left side of the boiler. Install controls. See Fig. 24 (Controls for steam boiler are shown.)

5. Assemble front spacer (or spacers) to intermediate section (or sections) against front liners. Offset ends of spacer should be at top. Use ¼"—20x½" washer head screws. See Fig. 24

6. Assemble back spacer (or spacers) to rear side of intermediate section (or sections).

7. Assemble front and back (narrow) panels to intermediate panel spacers with ¼"—20x½" washer head screws.

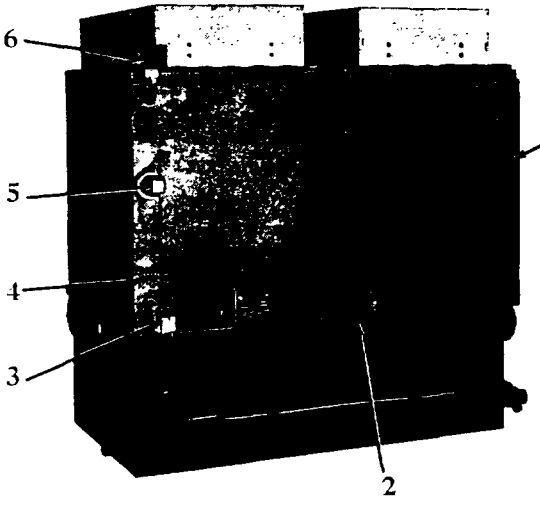

1. Front Liner with Cleanout Door
2. Front Spacer for Intermediate Section
3. Baso Automatic Pilot Switch
4. Terminal Block
5. Low Water Cutoff
6. Steam Limit Control (Steam Boilers) or Immersion Operating Control (Water Blrs)

FIG. 24—Starting Jacket Assembly—Larger Boilers

8. Assemble top (narrow) panels to front and back intermediate panels with #10 x 1" Sheet metal screws.

9. Assemble front half of left side jacket panel after removing knockouts for water column trim in case of STEAM BOILERS. Assemble front half of right side jacket panel.

10. Assemble front cross ties, center and bottom. See Fig. 25.

11. Install control wiring to accord with wiring diagram supplied.

12. Assemble upper front jacket panels. IMPORTANT! The top flange must be inserted under top flange of the side panels. See Fig. 25

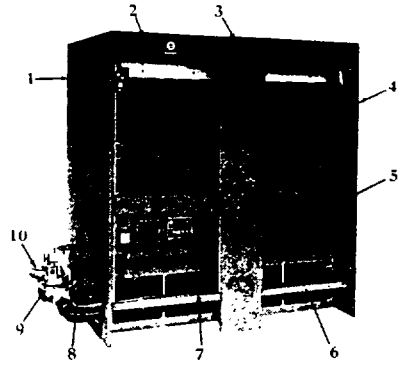

1. Left Hand Side Panel
2. Upper Front Panel
3. Intermediate Section Front Panel
4. Right Hand Side Panel
5. Front Center Cross Tie
6. Front Bottom Cross Tie
7. Pilot Tube
8. Vent Tube
9. Automatic Gas Valve
10. Gas Pressure Regulator

FIG. 25—Assembling Jacket And Controls Larger Boilers

13. Assemble rear half of left side jacket panel, also rear half of right side jacket panel.

14. Assemble back panels to narrow back panels and side panels. Assemble back filler pieces one at each upper corner of jacket.

15. Assemble drafthoods to canopies with four #10x½" sheet metal screws. See Fig. 26

16. Assemble top panels.

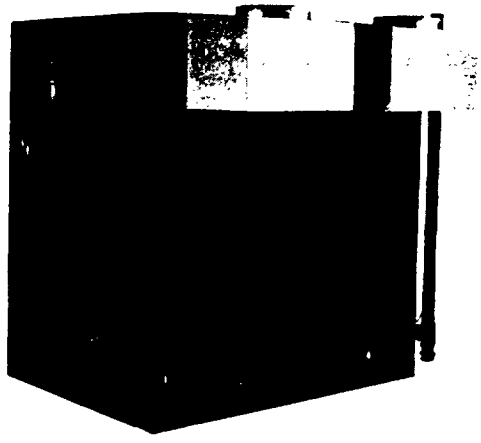

FIG. 26—Jacket Assembly—Rear View

ASSEMBLY OF MANIFOLD PIPING AND PILOT TUBING

1. For 6 to 11 Section Boilers—Hold manifold securely with wrench and assemble elbow, then assemble nipple with seat half of union so that they are level and face to back of boiler. Also assemble nipple with remaining half of union in automatic gas valve.

2. Make up drip leg piping (not supplied by AR & SS Corp.) of suitable height and install the manual shutoff valve assembly. See Figs. 27 and 28.

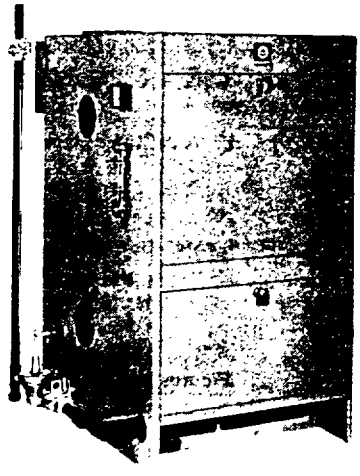

FIG. 27—Assembled Steam Boiler

3. Make suitable connection between the tee in the drip leg piping and the gas pressure regulator. Be sure to leave sufficient space between pipe cap on bottom of drip leg and floor to allow for drip removal.

4. Connect the piping and control assembly to the manifold piping at the union and place suitable block under drip leg to insure that installation is square and level.

5. For BOILER with NON 100% SHUTOFF MANUAL and ELECTRIC IGNITION—connect pilot line from manual shutoff valve assembly to the left pilot burner tube running the tubing through the manifold opening in the jacket. Interconnect pilot line to the remaining pilot burners. Tubing is to be installed above orifice holders.

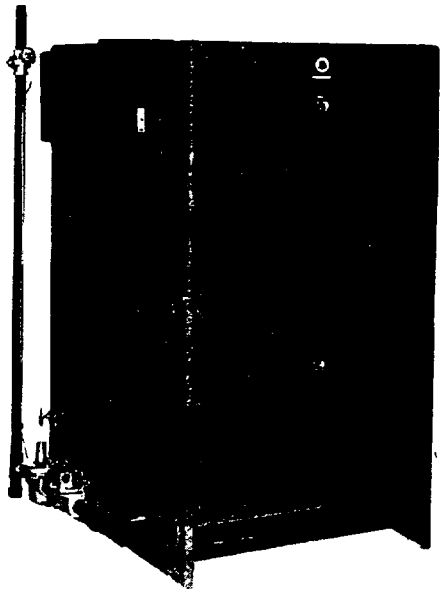

FIG. 28—Assembled Water Boiler

6. For BOILER with 100% SHUTOFF—Connect pilot line from manual shutoff valve assembly to the inlet side of V-581 pilot valve with tubing and straight connectors, running the tubing through the manifold opening in the jacket. The pilot valve should rest on the left manifold support bracket. Connect outlet side of the pilot valve to left end pilot burner tube, then inter-connect remaining pilots. The pilot tubing is to be installed above the orifice holders.

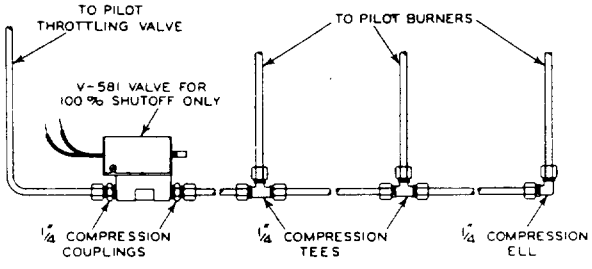

PILOT ASSEMBLY WITH $\frac{1}{4}$" TUBING

FIG. A

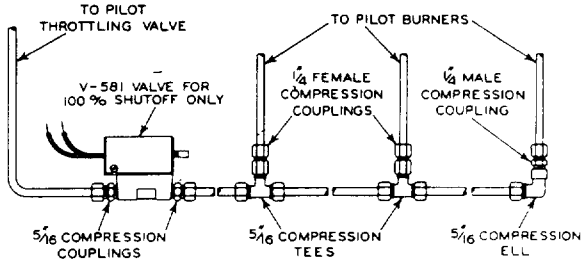

PILOT ASSEMBLY WITH $\frac{5}{16}$" TUBING

FIG. B

Figures A and B show pilot line assemblies for boilers with 100% shutoff. Pilot line installations for boilers with non 100% shutoff are the same except that the V-581 pilot line valve is not used. $\frac{5}{16}$" Tubing is provided for boilers where more than six pilots are connected to one pilot line.

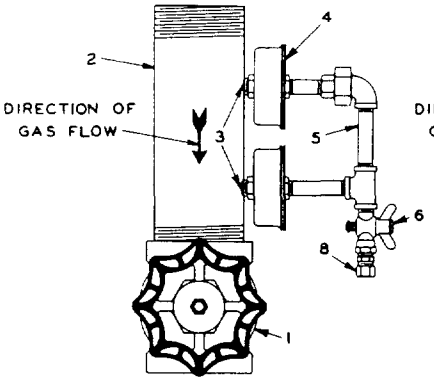

FIG. C

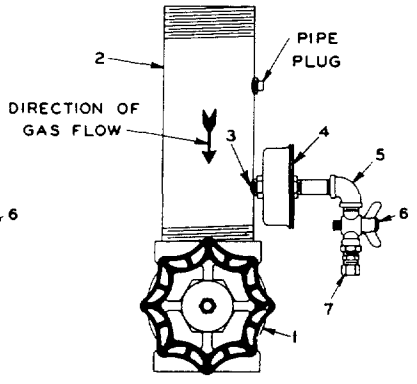

FIG. D

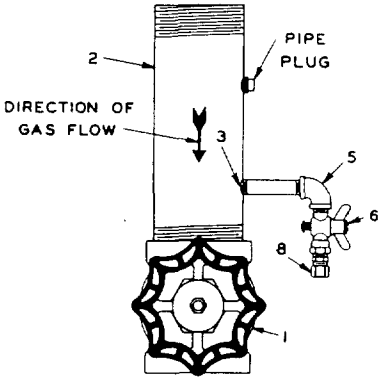

FIG. E

1. 3" SHUTOFF VALVE
2. 3" SPECIAL NIPPLE
3. PILOT SUPPLY TAPPING
4. FILTER
5. PILOT PIPING ASSEMBLY
6. PILOT COCK
7. 1/4" TUBING CONNECTOR
8. 5/16" TUBING CONNECTOR

Figs. C, D and E show pilot line supply connections to main gas line when 3" shutoff valve is provided. Following chart indicates boiler numbers and gases which are affected. Refer to installation diagrams, pages 10 to 14 inclusive.

Fig.	*Boilers Affected*	*Reference Page-Fig.*	*3" Shutoff Valve Installations*
C	G-628 to G-641 (incl.)	10 - 15 14 - 19	1 - From L.H. Side
C	G-628	11 - 16 13 - 18	1 - From L.H. Side
D	G-619, G-621, G-622, G-625	11 - 16 13 - 18	1 - From L.H. Side
D	G-637 and G-641	11 - 16 13 - 18	1 - From Each R.H. and L.H. Sides
E	G-628 to G-641 (incl.)	12 - 17	1 - From L.H. Side

7. Remove vent fitting from regulator (not used for L.P. gas) and see that flame check is in place. See Fig. 30. Replace vent fitting and install tube between regulator and gas valve, using tee connector, also between tee connector and vent tube connector inside of the boiler jacket. See Fig. 23

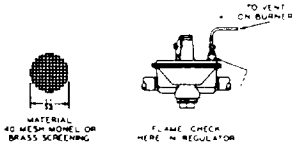

FIG. 30—Flame Check

8. Connect the thermocouple lead (or leads, attached to pilot burners) to the baso automatic pilot switch (or switches) located on the front liner panel. See Fig. 23

NOTE: For assembly of manifold piping and pilot tubing, items 4 through 8, also See Figs. 12, 13, 14, 15, 16, 17, 18 and 19 whichever is applicable.

For 13 to 41 Section Boilers—Follow instructions as directed for 6 to 11 sections boilers as piping arrangement and controls, except for size are essentially the same where gas supply to manifold is on the left side.

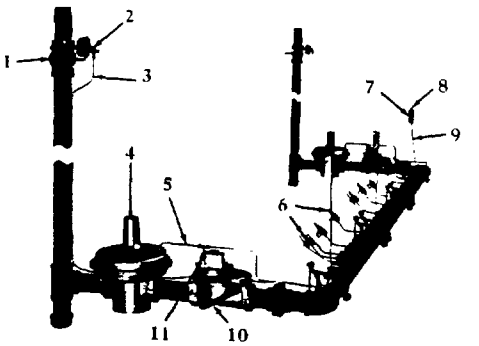

1. Manual Shutoff Valve
2. Pilot Cock
3. Pilot Line
4. Gas Pressure Regulator
5. Vent Line
6. Pilot Burner
7. Baso Automatic Pilot Switch
8. Reset Button
9. Thermocouple
10. Automatic Gas Valve
11. Manual Control Lever

FIG. 31—Controls—Manual Ignition—31 Section, Mfd Gas Shown

31—33—37 and 41 SECTION BOILERS FOR MANUFACTURED and 525-800 Btu. LP-AIR GASES—The gas supply to the manifolds is from both right and left sides. For NON 100% SHUTOFF piping and control arrangement, see Fig. 31. For 100% SHUTOFF piping and control arrangement, see Fig. 32. Pilot tubing hookup to the pilot burners for 31, 33, 37 and 41 section boilers is assembled from each side of the boiler. Pilot tubing hookup for all other boiler sizes is assembled from the left side of the boiler.

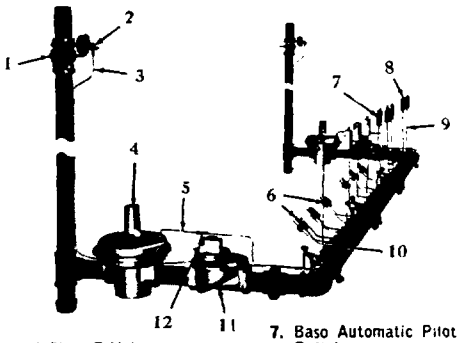

1. Manual Shutoff Valve
2. Pilot Cock
3. Pilot Line
4. Gas Pressure Regulator
5. Vent Line
6. Pilot Burner
7. Baso Automatic Pilot Switch
8. Reset Button
9. Thermocouple
10. Electric Pilot Valve
11. Automatic Gas Valve
12. Manual Control Lever

FIG. 32—Controls—Manual Ignition—100% Shutoff —31 Section, 525-800 Btu. LP-Air Gas Shown

28 SECTION BOILER FOR MANUFACTURED and 525-800 Btu. LP-AIR GASES
41 SECTION BOILER FOR NATURAL and MIXED GASES

Two gas pressure regulators are required for each of these installations. See Fig. 33 for piping as arranged for use with 3" automatic gas valve. Gas supply to the manifold is from the left side of the boiler.

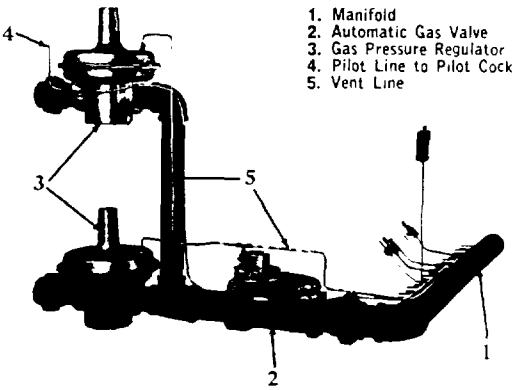

1. Manifold
2. Automatic Gas Valve
3. Gas Pressure Regulator
4. Pilot Line to Pilot Cock
5. Vent Line

FIG. 33—Control Arrangement With Two Regulators 28 Section Mfd. and 525-800 Btu. LP-Air Gases 41 Section Nat. and 801-1400 Btu. LP-Air Gases

ALL BOILERS

Install drain cock in each end section. Assemble front jacket panel cleanout doors and burner access doors.

STEAM BOILERS

Install steam gauge and water column trimmings in left end section. Install safety valve piping and safety valve in right end section.

Bushing is provided on 13 to 41 section boilers for installing safety valve in upper 6″ tapping on right end. Plug all unused tappings.

Fig. 34 shows front view of complete steam boiler (8 sections)

Fig. 35 shows rear view of complete steam boiler (8 sections)

Fig. 36 shows front view of complete steam boiler (22 sections)

Fig. 37 shows rear view of complete steam boiler (22 sections)



FIG. 34—8 Section Steam Boiler —Front View

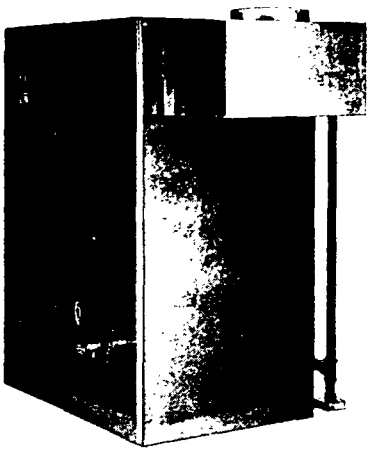

FIG. 35—8 Section Steam Boiler —Rear View

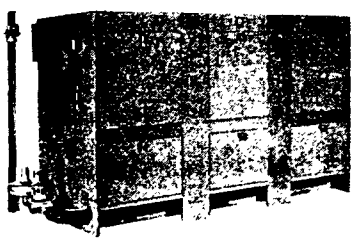

FIG. 36—22 Section Steam Boiler —Front View

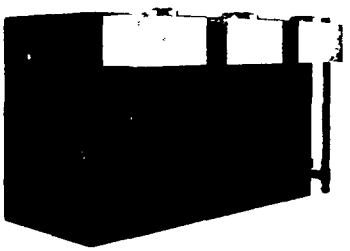

FIG. 37—22 Section Steam Boiler —Rear View

WATER BOILERS

Install combination altitude gauge and thermometer in left end section. Install relief valve in tapping near top of right end section. Fig. 38 shows front view of complete water boiler (8 sections).

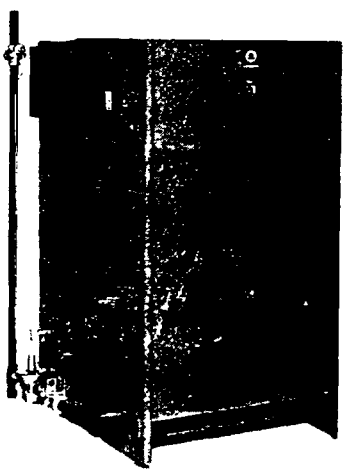

FIG. 38—8 Section Water Boiler— Front View

FILLING SYSTEM

Caution: Never start boiler unless it is properly filled. (After boiler is in operation make up water should be added slowly).

Steam boilers should be filled until water is visible midway up gage glass between try cocks.

Fill open hot water system to ⅓ height of expansion tank, remove rim and glass from gage and set movable pointer under automatic pointer. Replace rim and glass.

Fill closed hot water systems until relief valve opens. This should be at a pressure not greater than 30 lbs. per square inch. If necessary adjust relief valve setting. Remove the rim and glass from the gauge and set the movable pointer at a point which will represent an altitude slightly higher than the highest point in the heating system. (An altitude of approximately 69 feet represents a pressure of 30 lbs. per sq. in.) Note that the altitude—temperature gauge is calibrated both in feet of altitude and in lbs. per sq. in. Replace rim and glass and reduce pressure by draining out water until the indicating pointer lines up with the movable pointer.

Keep system filled. Pointers on gauge should be even. If pressure exceeds 30 lbs. relieve at once by opening relief valve or drain cock.

PILOT ADJUSTMENT

Light boiler as directed in operating instructions and check for gas leaks. Adjust pilot flame to extend over top of burner. Pilot rate can be adjusted with screw underneath cap on pilot throttling cock.

NORMAL PILOT INPUT FOR BASO PILOT BURNERS

	Mfd.	Nat.	Gas Mixed	L.P.	LP-Air
Input per Pilot Burner Btu/Hr.	1000	1400	1200	1000	1000

MAIN BURNERS INPUT ADJUSTMENT

After boiler is warmed up, shut off all other gas appliances connected to gas meter and time gas consumption. Adjust pressure regulator to give rated input indicated on nameplate.

$$\text{Gas Consumption (Cubic Feet Per Hr.)} = \frac{\text{Input Rating (Btu Per Hr.)}}{\text{Heating Value of Gas (Btu Per Cu. Ft.)}}$$

To increase consumption, turn adjustment screw (beneath cap on pressure regulator) clockwise; to decrease, turn screw counter-clockwise.

MAIN BURNER PRIMARY AIR ADJUSTMENT

Adjust burner flame by opening or closing primary air shutter. Flame should burn quietly, show no yellow and should have a noticeable inner blue cone. After adjustment tighten screw to lock shutter in position.

CHECKUP OF LOW WATER CUTOFF

1. Light pilot as indicated in Operating Instructions. Turn thermostat to highest temperature. Automatic gas valve should open.

2. Open drain cock and drain water until water level is below centerline of low water cutoff. Automatic gas valve should close.

3. Refill until water level is above centerline of low water cutoff. Automatic gas valve should open.

OPERATING

INSTRUCTIONS FOR SHUTTING OFF AND RELIGHTING MANUAL IGNITION

TO SHUT OFF:

1. Close Manual Shutoff Valve(s) "1" and Pilot Valve(s) "2"

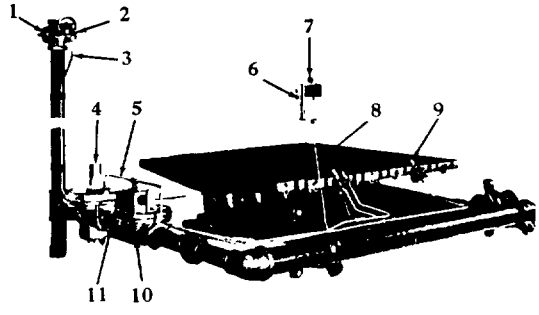

1. Manual Shutoff Valve
2. Pilot Cock
3. Pilot Line
4. Gas Pressure Regulator
5. Vent Line
6. Baso Automatic Pilot Switch
7. Reset Button
8. Thermocouple
9. Pilot Burner
10. Automatic Gas Valve
11. Manual Control Lever

FIG. 39—Controls—Manual Ignition—Nat., Mfd, and Mixed Gases

TO LIGHT:

1. Set Thermostat (or operating control) at lowest temperature.

2. Be sure Manual Shutoff valve(s) "1" and Pilot valve(s) "2" have been shut off for at least five minutes before proceeding.

3. Open Pilot valve(s) "2" and light all Pilot Burners.

4. Wait two minutes.

5. Press reset button(s) on all automatic Pilot switches.

6. Open Manual Shutoff valve(s) "1".

7. Set Thermostat (or operating control) at desired temperature.

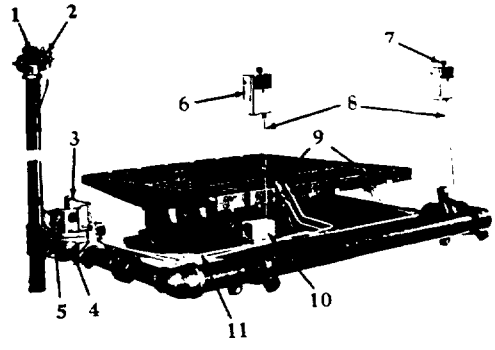

1. Manual Shutoff Valve
2. Pilot Cock
3. Vent Line
4. Automatic Gas Valve
5. Manual Control Lever
6. Baso Switches
7. Reset Buttons
8. Thermocouples
9. Pilot Burners
10. Electric Pilot Valve
11. Pilot Line

FIG. 40—Controls—Manual Ignition—100% Shutoff—Butane and Propane Gases

SHUTTING OFF AND RELIGHTING
MANUAL IGNITION 100% SHUTOFF

See Fig. 41

TO SHUT OFF:

1. Close Manual Shutoff valve(s) "1" and Pilot valve(s) "2".

TO LIGHT:

1. Set Thermostat (or operating control) at lowest temperature.
2. Be sure Manual Shutoff valve(s) "1" and Pilot valve(s) "2" have been shut off for at least five minutes before proceeding.
3. Open Pilot valve(s) "2".
4. Press pin on Electric Pilot valve(s) "10" and light all Pilot Burners.
5. Wait two minutes.
6. Press reset button(s) on all automatic Pilot switches.
7. Open Manual Shutoff valve(s) "1".
8. Set Thermostat (or operating control) at desired temperature

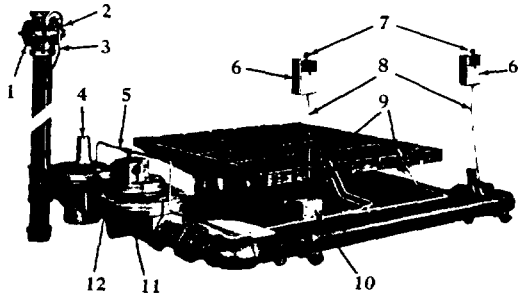

1. Manual Shutoff Valve
2. Pilot Cock
3. Pilot Line
4. Gas Pressure Regulator
5. Vent Line
6. Baso Automatic Pilot Switches
7. Reset Buttons
8. Thermocouples
9. Pilot Burners
10. Electric Pilot Valve
11. Automatic Gas Valve
12. Manual Control Lever

FIG. 41—Controls—Manual Ignition—100% Shutoff

SHUTTING OFF AND RELIGHTING ELECTRIC IGNITION

See Fig. 42

TO SHUT OFF:

1. Close Manual Shutoff valve "A" and Pilot valve "B".

TO LIGHT:

1. Set Thermostat (or operating control) at lowest temperature.
2. Be sure Manual Shutoff valve "A" and Pilot valve "B" have been shut off for at least five minutes before proceeding.
3. Open Pilot valve "B".
4. Press red button "C" on Manual Shutoff valve until left pilot burner lights.
5. Open Manual Shutoff valve.
6. Open automatic gas valve manually by lifting lever "D" (main burners should light).
7. Close automatic gas valve manually (all pilots should stay lighted.)
8. Press reset button on automatic Pilot switch.
9. Set Thermostat (or operating control) at desired temperature.

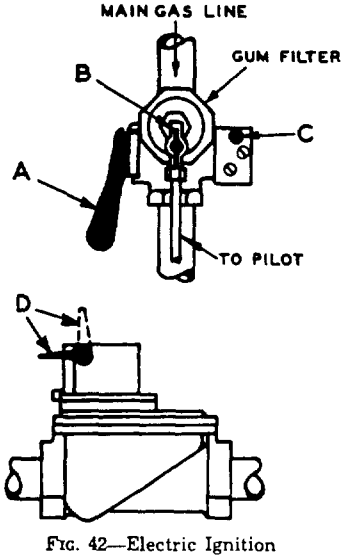

FIG. 42—Electric Ignition

PILOT GOES OUT

If the pilot flame is extinguished, the automatic pilot will shutoff the automatic gas valve. If boiler is not operating correctly, call Heating Contractor or Gas Company service man. If boiler is operating correctly, relight as directed on pages 22 and 23.

ELECTRIC POWER FAILURE

Boilers equipped with "Detroit" V-530 automatic diaphragm gas valve may be operated manually during electric power failure. Proceed as follows:

1. If pilot burners are out relight as directed for "Relighting (Manual Ignition)" for either 100% or Non 100% Shutoff, whichever is installed on the boiler. Follow instructions completely so boiler will resume automatic operation when power returns.

2. When pilot burners are lighted lift manual control lever on automatic gas valve; main burners should light.

3. CAUTION—Shut off boiler by pushing down the manual control lever on automatic gas valve before temperature or pressure becomes excessive.

Bear in mind that operating the boiler manually is an emergency condition and that constant supervision is required to prevent the possibility of damage due to over-heating. Never allow the boiler to operate under this emergency condition, if boiler is to be left unsupervised for any length of time.

4. Valve is fully recycling and will resume automatic operation when electric power returns.

MINIMUM RECOMMENDATIONS FOR SYSTEM PIPING

Figs. 43 and 44 illustrate minimum recommended system piping arrangements for both water and steam boilers. These suggestions are to be regarded as the minimum size and number of connections for satisfactory boiler operation. The return connections to steam boilers should always be connected through a Hartford Loop which will include a properly sized equalizing connection between the steam supply and the Hartford Return. For the G-6 Boiler this connection should be a minimum of 3" pipe.

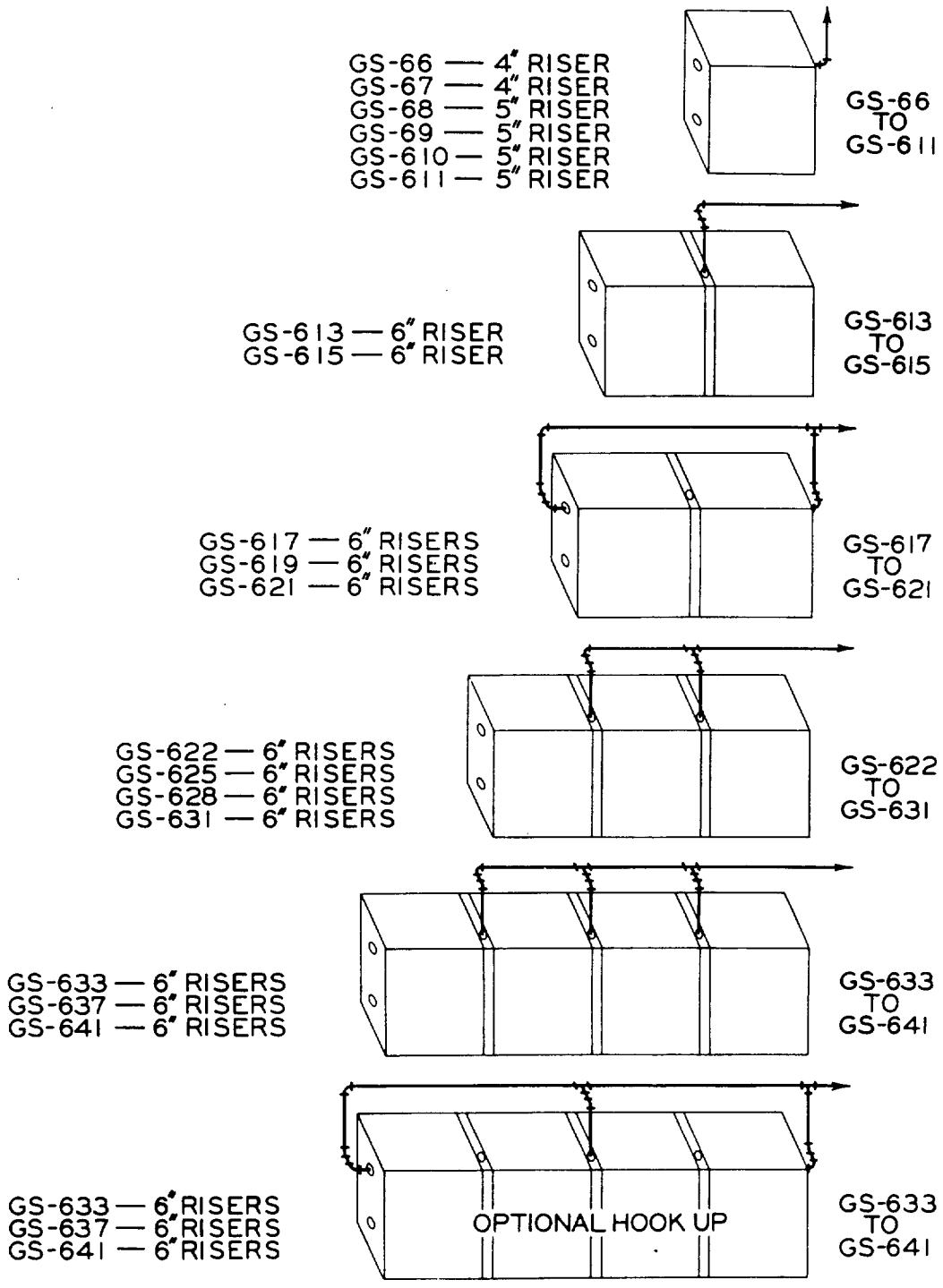

FIG. 43—Minimum Piping Recommendations—Steam Boilers

19123

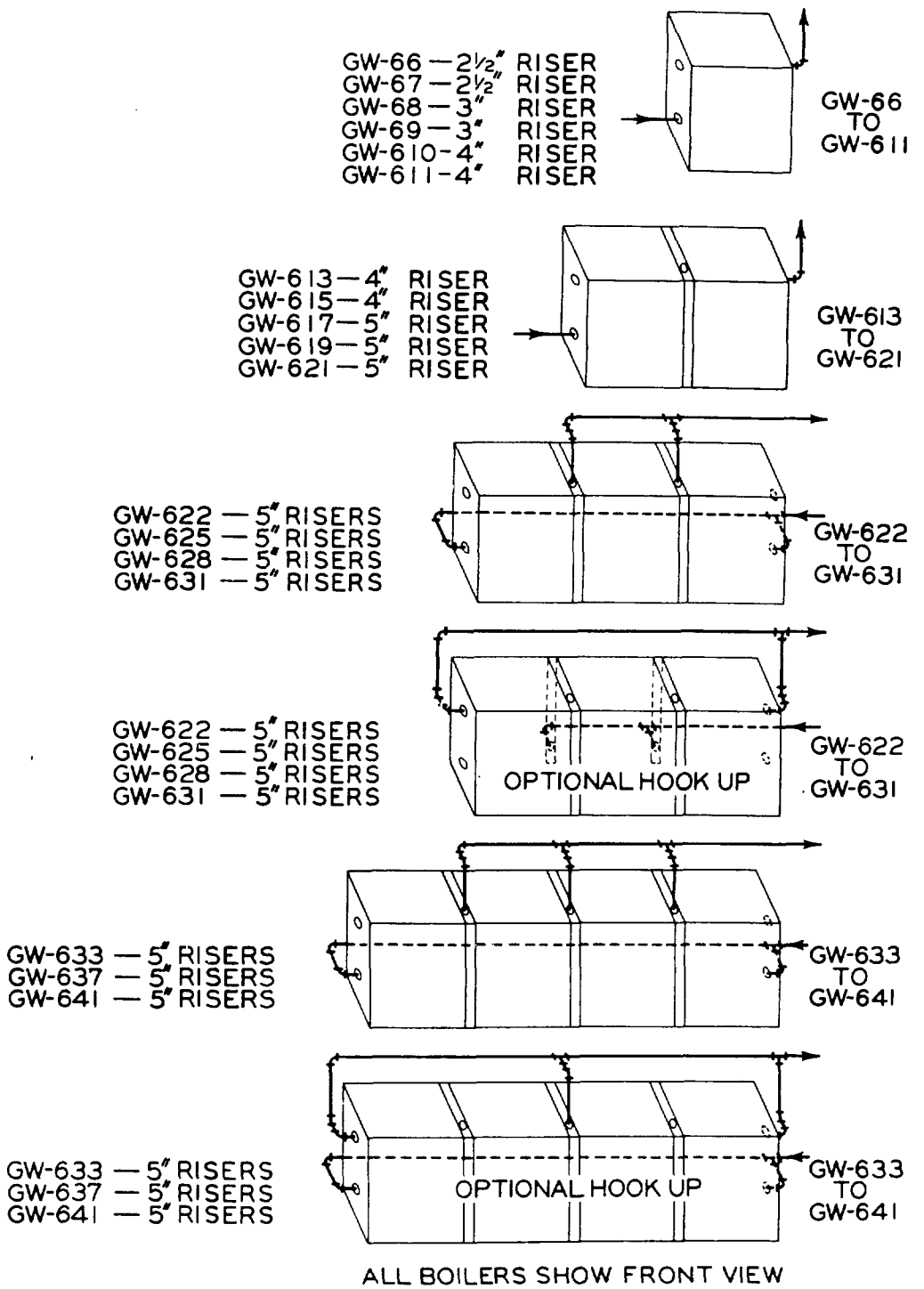

FIG. 44—Minimum Piping Recommendations—Water Boilers

19124

MAINTENANCE

IN FALL BEFORE STARTING BOILER

Drain system sufficiently to remove sludge in bottom of boiler. Do not drain more water than necessary to remove sludge. Then refill to proper level as directed on Page 22.

MAINTENANCE OF BOILER WHILE IN OPERATION

1. Check water level regularly and add water slowly when needed.
2. This boiler is fired automatically.
3. Test safety valve on steam boiler at beginning of season and once a month thereafter:
   a) Fasten cord or wire to valve lever.
   b) When pressure is up, stand safe distance away and pull cord. (Steam should be released)

IN WINTER WHILE NOT IN OPERATION

Drain entire system to prevent damage from freezing. Drain through drain cock, located at lowest point in system. Be sure boiler is completely drained.

IN SUMMER WHILE NOT IN OPERATION

Keep the system filled as during the heating season. Each boiler should have a periodic check up of all safety controls and a close inspection of the burners, mixing tubes, flue passageways, draft hoods and flue pipe. It is also good practice to recheck the input firing rate and the gas air mixture on the burners to see that the boiler is operating at normal efficiency. This inspection should be made by your heating contractor or a competent service man before the start of each heating season. If necessary, remove the cleanout jacket panel and the cleanout cover plates and clean pin fin surfaces of the boiler sections. The above inspection should include the testing of all safety pilots, limit controls, safety relief valves, and low water cutoff on steam boilers.

GENERAL MAINTENANCE OF HEATING SYSTEM

1. Keep radiators and convectors clean.

2. Keep system in good repair. It is advisable to have it inspected by your heating contractor at least once a year.

3. If a hot water radiator is hot at the bottom but not at the top, it indicates that air has accumulated inside and should be vented. To vent radiator: Hold small cup under air vent (Located near top of radiator), open vent until water escapes and then close.

4. Fill steam boilers only as directed (on page 22.) See CAUTION Note.

5. Fill hot water systems as follows:

   Open all radiator valves, but keep vents at top of radiator closed. Fill open systems till hands on altitude gage are even. If it is a closed system the water filling will stop automatically when proper pressure is reached. (Pressure should not exceed 30 pounds). Then, beginning with ground floor, vent each radiator as directed above. It may be necessary to add water during this operation to expel air from higher radiators.

6. If much water is added to system, it is advisable to heat system to a high temperature and vent again. This will make less venting necessary during the winter.

7. Where an expansion tank is used, make sure that neither the tank nor its drain pipe is exposed to freezing temperatures. Never place valves in piping leading to or from expansion tank.

BLOWING OFF STEAM BOILERS

In the process of installation, oil, grease or grit works into new systems causing steam boilers to foam. Therefore, it is frequently necessary to blow off boiler under pressure, and to sometimes repeat the operation until boiler water and water column glass are clean.

To blow off, remove the safety valve and fittings from the boiler and connect a 2" pipe with valve to the tapping and run pipe to a suitable drain. Close flow and return valves if available or all radiator valves. Fill boiler with water to top of gauge glass. Light burners as directed in Operating Instructions and when steam pressure is over 10 lbs. but below 15 lbs. open blow off valve and regulate valve to maintain pressure in boiler. Add water as required to maintain full gauge level in boiler. Continue for about 2 hours. Then drain water to proper level, remove blow off piping and replace safety valve.

If water supply has not sufficient pressure proceed as above but open blow off valve fully and let pressure drop to zero. Then close valve, replenish water and repeat several times. At end of blow off build up 10 lb. pressure, shutoff burners as directed in operating instructions and blow water out through drain opening. Refill to proper level, AFTER BOILER HAS COOLED. Do not use soda, alkali, vinegar or any acid for cleansing the boiler. In severe cases, the use of "Vinco" is recommended. Use 3 lbs. of Vinco for 350 Sq. Ft. radiation or less and 1 lb. for each additional 150 Sq. Ft.

CAUTION

After the blow off operation, a checkup should be made of the Low Water Cutoff as directed on Page 22.

NOTE: All parts of this boiler have been carefully inspected and packed. See Packing and Parts List sheet for details.

In case of shortage, make sure that all parts have been removed from shipping container and examine packing material thoroughly. If part cannot be found, report shortage to your dealer, giving boiler size, series number, date, inspector's number and packer's number. (See Parts List and Packer's Check Tickets)

GIVE BOILER SIZE AND SERIES NUMBER WHEN ORDERING REPAIR PARTS

BOILER SIZE .....

SERIES NO. (See Series Plate on Boiler).....

DATE .....