PLAINTIFF'S EXHIBIT CCS-14

How to Apply 85% Magnesia Heat Insulation

By PHIL SWAIN, EDITOR

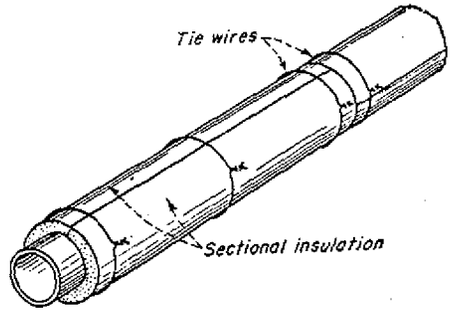

WIRED SECTIONAL

Here factory canvas is removed. Use at least 3 annealed iron wires per section. Twist wire ends together, bend over and press into insulation for protection. Stagger lengthwise joints. Point up all joints with 85% magnesia cement. An alternate method omits wiring, pastes down laps on factory canvas and applies metal bands

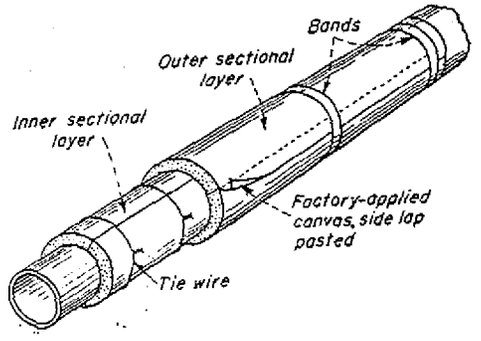

DOUBLE LAYER

Handle inner layer as before. Apply outer layer with all joints staggered. Outer layer may be wired without canvas like inner layer, or may be finished by pasting down factory canvas and banding

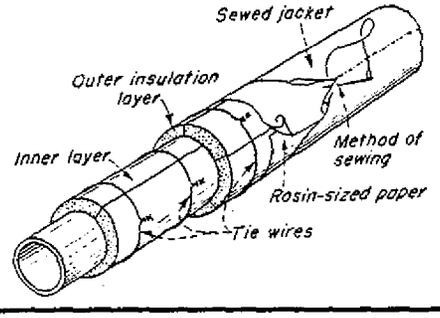

SEWED CANVAS JACKET

If cost of better looking, more durable job is warranted, remove factory canvas. Apply layers as above, followed by rosin-sized or sheathing paper. Stretch 8-oz canvas over paper, sew in place, coat with glue sizing, paint as desired. To avoid scorching canvas finish by heat from nearby flanges or other uninsulated surfaces, stop canvas and paper a few inches short of insulation end. Finish exposed ends with asbestos cement

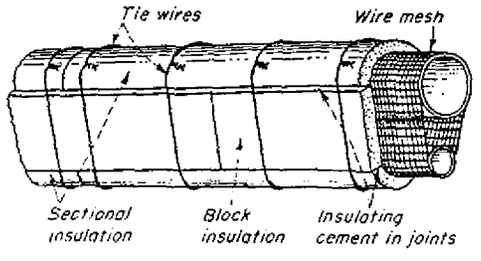

PARALLEL PIPING

Where two parallel pipes are too close for convenient separate insulation, or where a steam pipe must protect a water pipe from freezing, or keep oil line warm, arrangement pictured is convenient and practical

Practical know-how in convenient form. Drawings and condensed instructions summarize standard procedures in the *85% Magnesia Insulation Manual*, published by the Magnesia Insulation Manufacturers' Association, of Washington, D. C.

LARGE VALVES

To insulate valves of 4-inch pipe size or larger, build cover of block or sectional insulation of any convenient shape. Tie together with wires. Seal crevices with insulating cement. Use solid insulation half-inch thinner than pipe insulation to allow for cement finish. Then build to full thickness with asbestos cement, 2 coats.

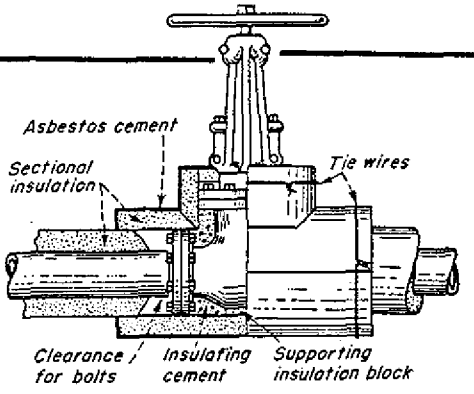

LARGE FITTINGS

Treat fittings, 4-inch and up, same as valves. Note: For valves and fittings under 4-inch, cover directly with asbestos cement in several half-inch layers to bring total thickness up to that of pipe covering. Allow each coat to dry before applying the next

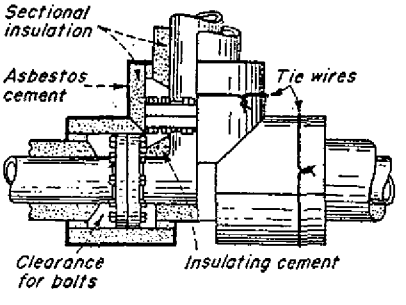

PERMANENT FLANGE INSULATION

Wire sectional insulation or blocks firmly in place and cover with asbestos cement. Extend flange insulation at least 2 inches over adjacent pipe insulation. Fill open space (in overlap) with insulating material. Cut back and bevel pipe insulation to allow removing bolts

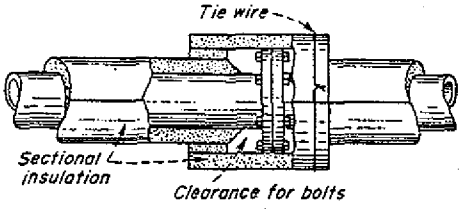

REPLACEABLE FLANGE INSULATION

Design pictured can be removed and replaced. Wrap sectional insulation with wire mesh and finish with asbestos cement. Or build wire mesh in two halves, cover with blocks. Cover this with wire mesh and cement inside and out

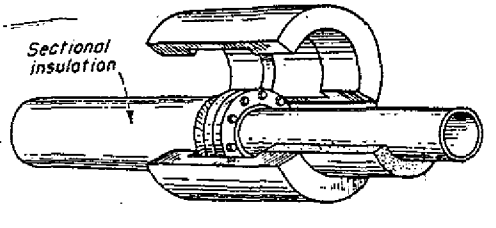

For more insulation facts, turn page→

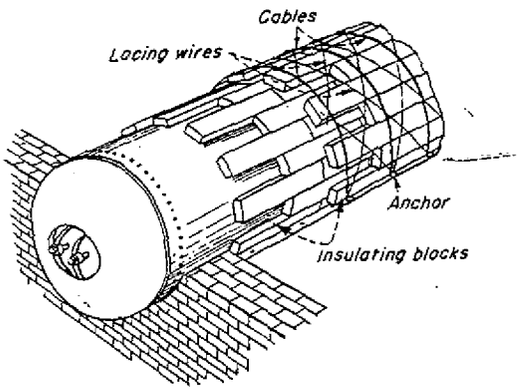

STEEL DRUMS

Where full circumference is not exposed, as with boiler drums, install firm anchorages. Fit blocks to cylinder, staggering joints, and bind firmly with annealed iron wire laced through steel straps or wire cables

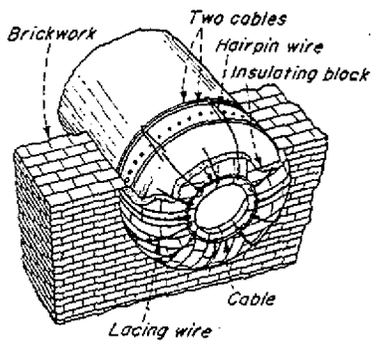

DRUM HEAD

Secure job requires anchoring blocks in manner shown, or equivalent. Since curved blocks are not available to fit round end of tank, pieces of flat block are used. These are held in place by network of wires. Finish with asbestos cement in one or several layers.

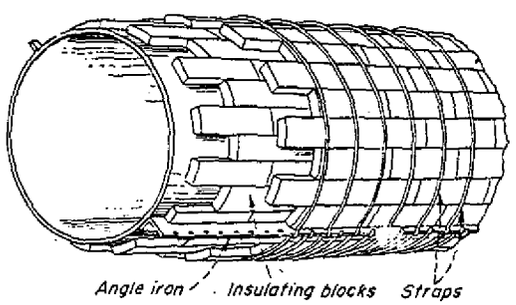

HORIZONTAL TANK

Horizontal tank pictured is completely encircled by insulation. Note that insulation in lower half tends to sag from tank, so *must be more* firmly held in place. Angle irons shown are one way. Asbestos cement finish

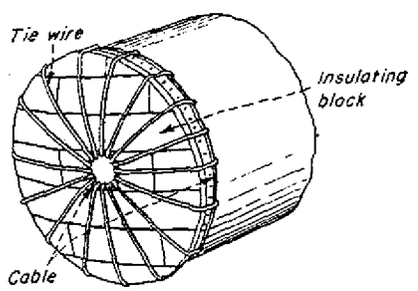

HORIZONTAL TANK END

Anchoring method, *much* like that for boiler-drum end but with more gradual curve, may allow use of full-size blocks. Asbestos cement finish

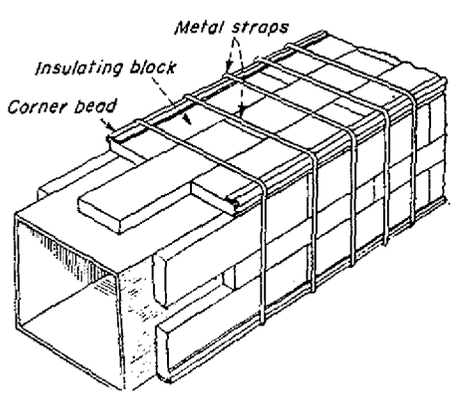

DUCTS WITHOUT STIFFENERS

Case pictured: breeching, duct or flue with no stiffeners or other projections. Nor is any provision needed for expansion. Blocks applied directly to surface and held by wire cables or metal straps. Metal beads protect corners

DUCT SURFACE WITH STIFFENERS

When projections are far apart and there's no need to allow for expansion and contraction, wire blocks directly to surface and insulate stiffeners as pictured below

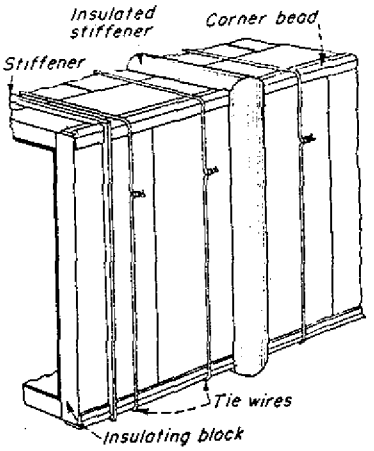

STIFFENER INSULATION

Half sections may be used to insulate stiffeners or other projections on ducts, shown above

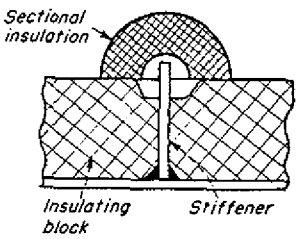

DUCTS WITH PROJECTIONS

Where stiffeners or other projections are closely spaced, or where you must allow for expansion or contraction, stretch heavy-iron-wire fabric over the projections to form a foundation. Then wire blocks in place and finish with asbestos cement in the usual manner

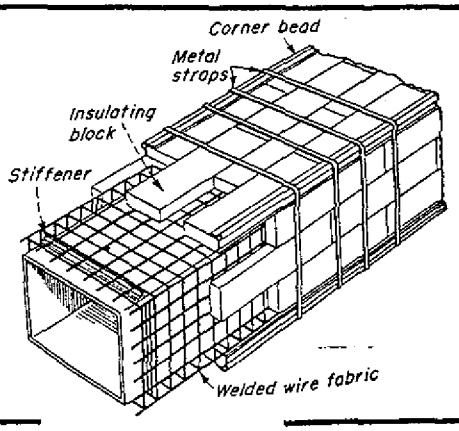

Facts to Remember About 85% Magnesia

► As the name suggests, 85% magnesia contains not less than 85% of magnesium carbonate. To this white, crystalline, extremely light insulating material, the makers add 15% of asbestos fiber as a binder.

The wet mixture of magnesium carbonate and asbestos fibers is shaped first by molding and drying, then (usually) by machining to commercial dimensions. Usual commercial shapes are split shells—called sectional insulation—for piping, flat blocks, also curved blocks — segmental insulation—to fit large piping and tanks.

The K Factor

In a recent test of a commercial block of 85% magnesia, the U.S. Bureau of Standards measured the density as 13.2 lb per cu ft. The K value (Btu transmitted per hr per sq ft for a temperature gradient of 1 deg F per inch of thickness) was 0.39 at 130 F mean temperature. This compares with MIMA values of 0.39 at 100 F mean temperature, 0.45 at 300 F, and 0.51 at 500 F.

85% magnesia insulation withstands temperatures up to 600 F without damage. Above 600 F the material begins to calcine. It withstands repeated wetting and drying.

For heated surfaces operating above 600 F, an 85% magnesium outer layer is customarily applied over an inner layer of high temperature insulation—usually "diatomaceous silica," molded with a binding component of asbestos fiber.

Commercial thicknesses of sectional insulation and blocks include 1½, 2, 2½, and 3 in. Sectional insulation is also available in graded sizes known as "standard" and "double standard." See table below:

Insulation Thickness: Standard (S) And Double Standard (DS)

Pipe size, nominal	*S*	*DS*
½ to 1-½	7/8	1-29/32
2 to 3-½	1-1/32	2-5/32
4	1-⅛	2-¼
5 & 6	1-⅛	2-5/16
8 & 10	1-¼	2-½
12 and over	1-½	3