PLAINTIFF'S EXHIBIT
JM 1082

National Gypsum Company
Joint Research Program

ROOFING

MTC 017243

"P" DECK - CANADA

B-5-6-8-8

Basement

ROOFING

MTC 017244

5

Feb. 10, 1959 H. W. ASHMAN 2,873,008

BUILDING PANEL UNITS AND ROOFS OR WALLS MADE THEREFROM

Filed Jan. 3, 1956

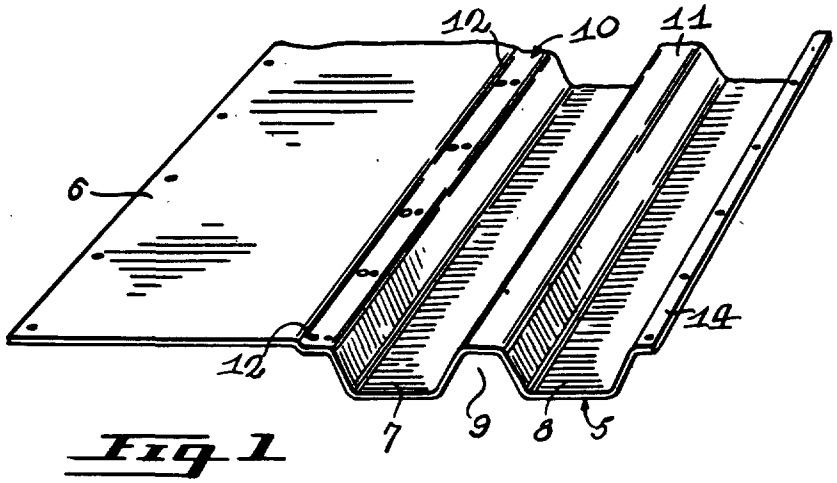

Fig. 1

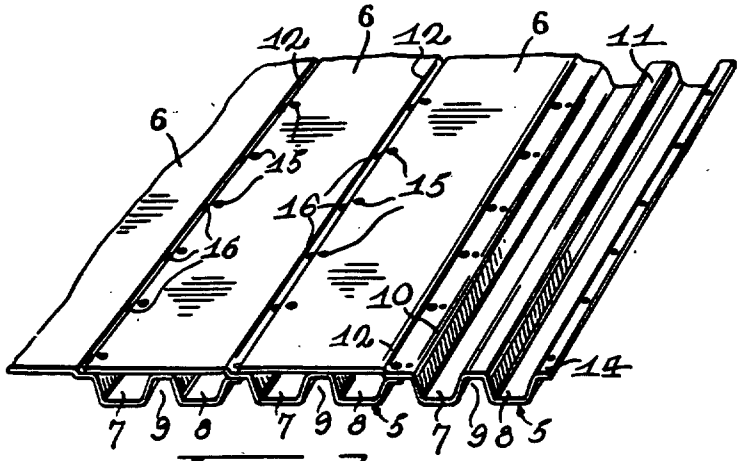

Fig. 2

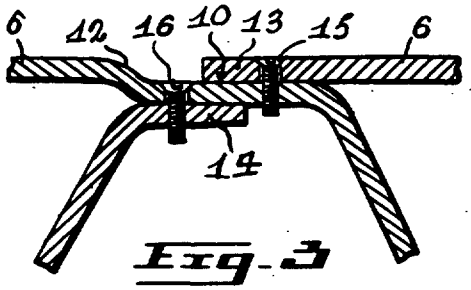

Fig. 3

Inventor
HERBERT WILLIAM ASHMAN
By Fethestonhaugh & Co.
Attorneys

MTC 017245

United States Patent Office

2,873,008

Patented Feb. 10, 1959

2,873,008

BUILDING PANEL UNITS AND ROOFS OR WALLS MADE THEREFROM

Herbert William Ashman, West End, Esher, England, assignor, by mesne assignments, to Keasbey & Mattison Company, Ambler, Pa.

Application January 3, 1956, Serial No. 557,158

Claims priority, application Canada August 26, 1955

2 Claims. (Cl. 189—86)

This invention relates to improvements in trough or cavity type structures made from corrugated panel units or sheets of asbestos-cement, metal or suitable material, from which a roof, decking or wall can be constructed.

A particular object of this invention is to provide panel units comprising a corrugated section formed of a plurality of troughs of equal depth and an integral, laterally extending, flat, wing section which is adapted to overlie and to be secured to one side of the corrugated section of an adjacent unit so as to form a trough or cavity structure having a substantially continuous lining surface on one side thereof.

Another object is to provide a relatively inexpensive cavity or trough type decking which is easily and quickly assembled in the field.

A further object is to provide a cavity or trough type decking structure of the character described with a novel arrangement of overlapping joints to reinforce said structure.

Other objects and features characteristic of this invention will be understood more fully from the following detailed description taken in connection with the accompanying drawings, in which—

Fig. 1 is a perspective view of a unit embodying my invention.

Fig. 2 is a perspective view showing a plurality of units in assembled relation to one another.

Fig. 3 is a fragmentary view detailing the overlapping joint of three units.

Referring more particularly to the drawings, Fig. 1 shows a panel unit of substantial length and breadth composed of a corrugated section 5 and a flat wing-like section 6 projecting laterally from one side of said corrugated section 5. The corrugated section is shaped to provide at least two troughs 7 and 8 in one surface of the sheet separated by at least one trough 9 in the opposite surface and intermediate said troughs 7 and 8. The outer side of trough 7 has a flange 10 which extends laterally in the plane of the outer surface 11 of trough 9 and then is stepped upwardly, as indicated at 12, through a distance equal to the thickness of the sheet. The flat wing-like section 6 extends laterally from the stepped marginal portion 12 of flange 10 as an integral part thereof. Section 6 is of a width substantially equal to that of the corrugated section 5 including the flange 10. Trough 8 has an outer marginal flange 14 which extends laterally along a plane slightly lower with reference to the plane of said surface 11 spaced therefrom a distance substantially equal to the thickness of the sheet.

The panel units are assembled as shown in Figs. 2 and 3 by placing the wing-like section 6 of one unit in superimposed relation to the corrugated section 5 of an adjacent unit so that flange 10 of the second unit and flange 14 of the first overlap and the marginal portion 13 of wing section 6 of a third unit flatly engages the upper surface of flange 10 of the second unit. The margin 13 of the third unit is secured to flange 10 of the second unit by screw 15. Screw 16 secures flange 10 of the second unit to flange 14 of the first unit.

Each subsequent unit is similarly connected to provide a panelling or decking structure. An important feature in the assembly of units is particularly illustrated in Fig. 3, in which the marginal portion 13 of a unit at one side of a central unit and the flange 14 of a unit at the opposite side of said central unit are secured to the central unit's flange 10 at opposite surfaces thereof and in overlapping relation to each other to provide a reinforcement to the joint.

The embodiments of the invention in which an exclusive property or privilege is claimed are defined as follows:

1. A building roof or wall structure formed of units of sheet material each comprising a corrugated section and a flat section integrally formed therewith, said corrugated section being formed to provide a plurality of troughs of equal depth including at least two troughs having their open faces on one side of said sheet and another trough intermediate said two troughs and inverted relatively thereto, said flat section extending laterally from one side of said corrugated section along a plane spaced outwardly from and parallel to the upper plane of said corrugated section a distance substantially equal to the thickness of the sheet material and an outwardly directed flange extending from the side of said corrugated section remote from the flat section, each of said units being arranged with their flat sections extending unidirectional and overlying the corrugated section of an adjacent succeeding unit to conjointly form a substantially flat surface on one side of the structure, said units being successively arranged with a substantial surface of the marginal portion of a flat section of a preceding unit and a substantial portion of the flange remote from the flat section of a succeeding unit in flat abutting engagement on opposite sides of a substantial portion of the flange between the trough and the flat section of an intermediate unit, and with marginal portions of said succeeding and preceding units in overlapping relation to one another to provide a reinforced structure joint.

2. A building roof or wall structure as set forth in claim 1, in which said flange remote from the flat section extends along a plane spaced inwardly from and parallel to the upper plane of said corrugated section a distance substantially equal to the thickness of the sheet material.

References Cited in the file of this patent

UNITED STATES PATENTS

1,009,230	Fawkes	Nov. 21, 1911
1,940,830	Weyerbacher	Dec. 26, 1933
2,525,059	Ashman	Oct. 10, 1950

FOREIGN PATENTS

773,518	France	Sept. 3, 1934

MTC 017246

Canadian Patent Office

568,280
Issued Dec. 30, 1958

Patent No. 568,280

Building Panel Units

Herbert W. Ashman, Montreal, Quebec, Canada, assignor to Atlas Asbestos Company Limited, Montreal, Quebec, Canada

Application August 26, 1955, Serial No. 691,986
5 Claims

This invention relates to improvements in trough or cavity type structures made from corrugated panel units of sheets of asbestos-cement, metal or suitable material, from which a roof, decking or wall can be constructed.

A particular object of this invention is to provide panel units comprising a corrugated section formed of a plurality of troughs of equal depth and an integral, laterally extending, flat, wing section which is adapted to overlie and to be secured to one side of the corrugated section of an adjacent unit so as to form a trough or cavity structure having a substantially continuous lining surface or one side thereof.

Another object is to provide a relatively inexpensive cavity or trough type decking which is easily and quickly assembled in the field.

A further object is to provide a cavity or trough type decking structure of the character described with a novel arrangement of overlapping joints to reinforce said structure.

Other objects and features characteristic of this invention will be understood more fully from the following detailed description taken in connection with the accompanying drawings, in which -

Fig. 1 is a perspective view of a unit embodying my invention.

Fig. 2 is a perspective view showing a plurality of units in assembled relation to one another.

Fig. 3 is a fragmentary view detailing the overlapping joint of three units.

Referring more particularly to the drawings, Fig. 1 shows a panel unit of substantial length and breadth composed of a corrugated section 5 and a flat wing-like section 6 projecting laterally from one side of said corrugated section 5. The corrugated section is shaped to provide at least two troughs 7 and 8 in one surface of the sheet separated by at least one trough 9 in the opposite surface and intermediate said troughs 7 and 8. The outer side of trough 7 has a flange 10 which extends laterally in the plane of the outer surface 11 of trough 9 and then is stepped upwardly, as indicated at 12, through a distance equal to the thickness of the sheet. The flat wing-like section 6 extends laterally from the stepped marginal portion 12 of flange 10 as an integral part thereof. Section 6 is of a width substantially equal to that of the corrugated section 5 including the flange 10. Trough 8 has an outer marginal flange 14 which extends laterally along a plane slightly lower with reference to the plane of said surface 11 spaced therefrom a distance substantially equal to the thickness of the sheet.

The panel units are assembled as shown in Figs. 2 and 3 by placing the wing-like section 6 of one unit in superimposed relation to the corrugated section 5 of an adjacent unit so that flange 10 of the second unit and flange 14 of the first overlap and the marginal portion 13 of wing section 6 of a third unit flatly engages the upper surface of flange 10 of the second unit. The margin 13 of the third unit is secured to flange 10 of the second unit by screw 15. Screw 16 secures flange 10 of the second unit to flange 14 of the first unit.

Each subsequent unit is similarly connected to provide a panelling or decking structure. An important feature in the assembly of units is particularly illustrated in Fig. 3, in which the marginal portion 13 of a unit at one side of a central unit and the flange 14 of a unit at the opposite side of said central unit are secured to the central unit's flange 10 at opposite surfaces thereof and in overlapping relation to each other to provide a reinforcement to the joint.

The embodiments of the invention in which an exclusive property or privilege is claimed are defined as follows:

1. A building panel unit of sheet material comprising a corrugated section and a flat section of substantially equal widths, said corrugated section being formed to provide a plurality of troughs of equal depth including at least two troughs on one side of the sheet and another trough intermediate said two troughs and inverted relatively thereto, said flat section extending laterally from one side edge of said corrugated section along a plane spaced outwardly from and parallel to the upper plane of said corrugated section a distance substantially equal to the thickness of said sheet material, one of said two troughs which is adjacent the flat section being provided with a flange extending between said last mentioned trough and said flat section along the upper plane of said corrugated section, said flange having its outer margin stepped upwardly to merge with the adjacent margin of said flat section, the other of said troughs which is remote from said flat section being provided along its free edge with an outwardly directed flange extending laterally along a plane spaced inwardly from and parallel to the upper plane of said corrugated section a distance substantially equal to the thickness of said sheet material.

2. A building roof or wall structure formed of units of sheet material each comprising a corrugated section and a flat section integrally formed therewith, said corrugated section being formed to provide a plurality of troughs of equal depth including at least two troughs having their open faces on one side of said sheet and another trough intermediate said two troughs and inverted relatively thereto, said flat section extending laterally from one side of said corrugated section along a plane spaced outwardly from and parallel to the upper plane of said corrugated section a distance substantially equal to the thickness of the sheet material and an outwardly directed flange extending from the side of said corrugated section remote from the flat section, each of said units being arranged with their flat sections extending unidirectional and overlying the corrugated section of an adjacent preceding unit to conjointly form a substantially flat surface on one side of the structure, and said units being successively arranged whereby an intermediate unit will have the marginal portion of the flat section of said intermediate unit secured to the upper surface of a preceding unit adjacent the juncture of the corrugated and flat sections of said preceding unit and will have the flange of said intermediate unit which is remote from the flat section thereof secured to the under surface of a succeeding unit adjacent the juncture of the corrugated and flat sections of said succeeding unit.

3. A building roof or wall structure as set forth in

MTC 017247

3 4

claim 2, in which a marginal portion of the trough adjacent the flat section extends laterally along the upper plane of said corrugated section to provide an outwardly directed flange between said trough and said flat section, said flange having its marginal portion bent upwardly and then outwardly to merge with the adjacent edge of the flat section each unit having a substantial surface of said marginal portion of a flat section in flat abutting engagement with a substantial portion of the upper surface of the flange located between said trough and flat section of a preceding unit and having one surface of said flange remote from the flat section in flat abutting engagement with a substantial portion of the under surface of the flange located between said trough and flat section of a succeeding unit.

4. A building roof or wall structure as set forth in claim 2, in which said flange remote from the flat section extends along a plane spaced inwardly from and parallel to the upper plane of said corrugated section a distance substantially equal to the thickness of the sheet material.

5. A building roof or wall structure as set forth in claim 3, in which the marginal portion of the flat section of a succeeding unit and the flange remote from the flat section of a preceding unit are secured to the flange between the trough and flat section of an intermediate unit on opposite sides thereof and with marginal portions of said succeeding and preceding units in overlapping relation to one another to provide a reinforced structural joint.

FETHERSTONHAUGH & CO.,
Canada Cement Bldg.,
Montreal, Que.,
Patent Agent
of the Applicant.

The Queen's Printer and Controller of Stationery, Ottawa, 1958

MTC 017248

with T-Deck file

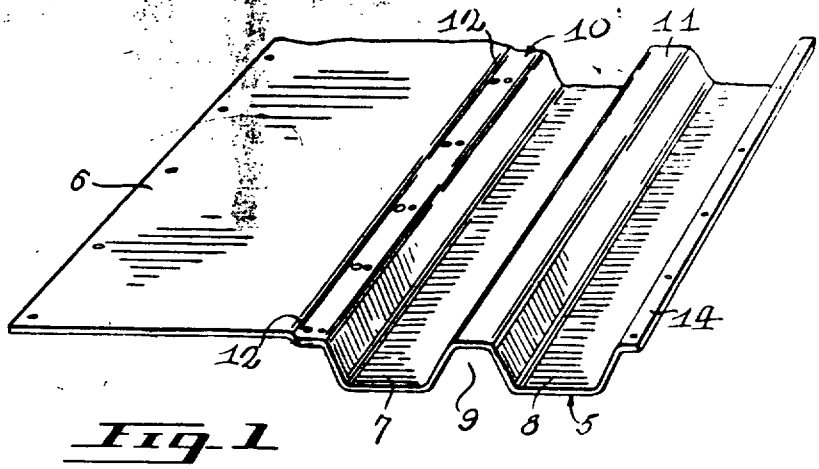

Fig. 1

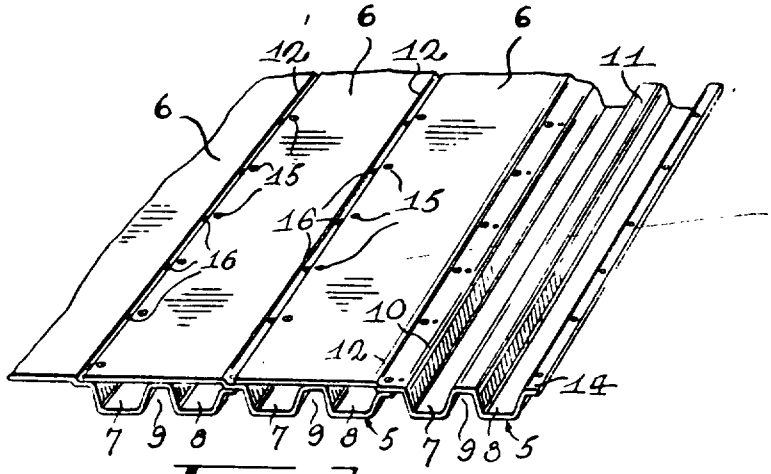

Fig. 2

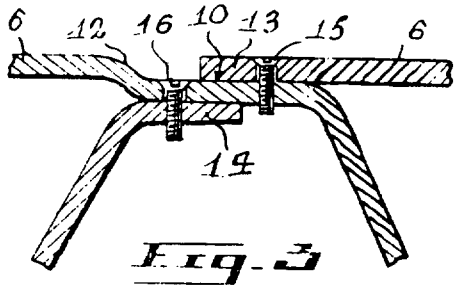

Fig. 3

568280

MTC 017249

November 17, 1967

Mr. A. E. Williams
Reynolds Metals Company
6601 West Broad Street
Richmond, Virginia 23218

Dear Alf:

Following my letter of September 13 with the information on asbestos-cement cavity deck constructions which Mr. Burnett had suggested you make up in aluminum for our evaluation, I had a patent search made and have received the following information from our patent people.

Turner and Nevall's "T" deck structure is covered by three U.S. patents and two Canadian patents. U.S. Patent No. 2,525,059 relates to the first form of decks that they patented and is no longer is force. Its Canadian counterpart, No. 482-068 will expire on March 25, 1969. The claims of the Canadian patent are not limited to asbestos-cement constructions and would cover Structure made of sheet metal.

U.S. Patent No. 2,601,082 will expire on June 17, 1969. The claims are limited to a construction comprised of asbestos-cement sheets and would not be infringed by a roof structure form of sheet metal. There is no corresponding Canadian patent.

The most recent U.S. Patent No. 2,873,008 will expire on February 10, 1976. The claims are not limited to any specific material. The corresponding Canadian Patent No. 568,280, which will expire on December 30, 1975, also contains claims which are not limited to any specific material.

We have enclosed copies of the patents for your use.

NOV 27 1967
PATENT DEPT.

When we receive initial samples from you, we will have our Patent Dept. review the design, and will forward their comments to you.

Please let me know if I can be of any further assistance.

Sincerely,

John Q. Trice
Director, Research and Development
Building Materials

JQT:edk

cc: A. F. Lysaght - Reynolds
F. L. Pundsack
bcc: J. A. McKinney

Research and Engineering Center
November 7, 1967

J. Q. Trice

Turner and Newall
"T" Decks

This company's "T" deck structure is covered by three U. S. patents and two Canadian patents. U. S. Patent No. 2,525,059 relates to the first form of decks that they patented and is no longer in force. Its Canadian counterpart, No. 482,068 will expire on March 25, 1969. The claims of the Canadian patent are not limited to asbestos-cement constructions and would cover structure made of sheet metal.

U. S. Patent No. 2,601,082 will expire on June 17, 1969. The claims are limited to a construction comprised of asbestos-cement sheets and would not be infringed by a roof structure form of sheet metal. There is no corresponding Canadian patent.

The most recent U. S. Patent No. 2,873,008 will expire on February 10, 1976. The claims are not limited to any specific material. The corresponding Canadian Patent No. 568,280, which will expire on December 30, 1975, also contains claims which are not limited to any specific material.

We have enclosed copies of the above patents for your use. If J-M wishes to sell "T" decks similar to or slightly varied from the structure shown in the patents, we would like the opportunity to review the design to determine whether infringement questions may be raised.

R. M. Halvorsen

RMH:fmh

Enclosures

cc: P. L. Earle -- P.S. I HAVE THE PATENTS I LEFT WITH YOU THE OTHER WEEK. IF YOU NEED THEM, LET ME KNOW.