pipe except one. Some local regulations require that a damper be omitted in one leader connected to a room heated at all times.

In a gravity circulating system, the ratio of stack to leader area is quite important, although little is gained by providing wall stacks with areas in excess of 75 percent of their connected leader pipe area. In most cases

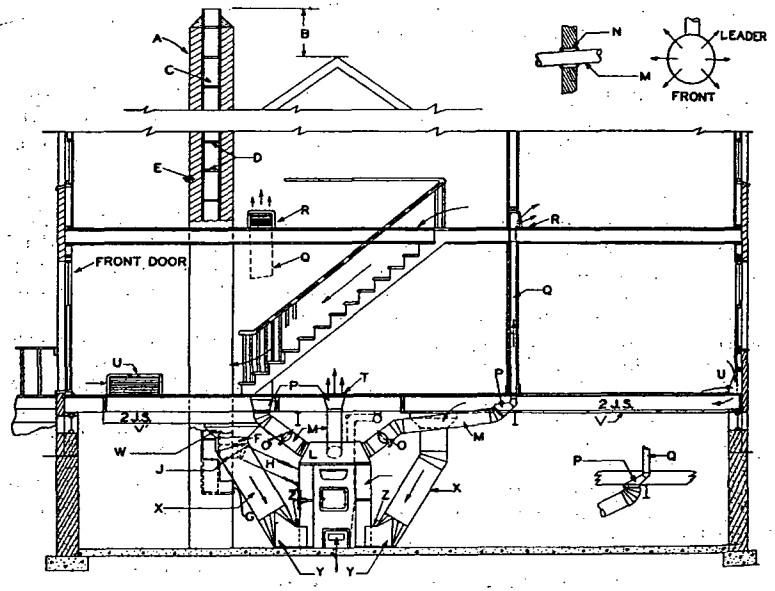

FIG. 1. A SECTIONAL VIEW OF A TYPICAL PLANT SHOWING GOOD INSTALLATION PRACTICE[a]

A. House chimney, no bends nor offsets.
B. Top of chimney at least 2 ft above ridge of roof.
C. Flue lining, fireclay.,
D. All joints air tight.
E. At least 8 in. brick.
F. No other connection beside that to furnace.
G. Cleanout frame and door, airtight.
H. Smoke pipe, end flush with inner surface of flue.
I. Draft door.
J. Use flue thimble.
K. Casing body.
L. Casing hood or bonnet, top of all leader collars on same level.
M. Round leader, pitch 1 in. per foot.
N. Sleeve with air space or 1 in. of noncombustible insulation around leader where passing through wall.
O. Dampers in all leaders.
P. Transition fittings.
Q. Rectangular wall stack.
R. Baseboard register.
S. Distributes pipes equally around bonnet.
T. Floor register.
U. Return air face.
V. Panning under joist.
W. Transition collar.
X. Round return pipe.
Y. Transition shoe.
Z. Top of shoe at casing not above grate level.

[a] From *NWAH&ACA* Manual 5: Gravity Code and Manual, Fifth Edition, 1954.

a 3¼ in. x 12 in. stack is the largest which can be installed in normal wall construction. Hence, any room having a heat loss much in excess of 9000 Btu per hr, will require two or more stacks, or one oversized stack built into a 6 in. studding space, providing the design register temperature is to be retained at the average value of 175 F, which has been recommended.

Registers used for discharging warm air into rooms should have a free area not less than the area of the leader pipe to which the register is attached. First story registers should be connected through boot and register box extensions having areas at least equal to leader areas. Upper story registers should be of the same width as the wall stack, and should be placed either in the baseboard or sidewall, preferably without offsets. First story registers may be of the baseboard or floor type, with the former location preferred. Leader pipes or stacks intended to heat two rooms are not recommended.

RETURN AIR GRILLES, DUCTS, AND CONNECTIONS

The placement and number of return grilles will depend upon the size, details, and exposure of the house. Small compactly built houses may be adequately served by a single return grille effectively placed in the central hall. It is usually desirable to have two or more returns, provided that in two-story residences one return is placed to receive effectively the return air at the foot of the stairs. A return air connection must be carried to any room whose floor level is below that of adjacent rooms.

Return ducts from upstairs rooms may be necessary in spaces which are closed off from the rest of the house, or which have much outdoor exposure. Return grilles on different floor levels should not be connected to the same vertical return duct.

The return air grilles should have free areas at least equal to the ducts to which they connect, and should be installed in the floor, or in the baseboard with the top edge of the grille not more than about 14 in. above the floor line. As frictional resistance in the return air system is as detrimental as resistance in the warm-air system, care should be exercised in locating return air grilles which require long return ducts.

The frictional resistance of the long ducts used in parallel with short return ducts must be reduced to compensate for the length. This is accomplished by using design data given in the following section, Outline of Design Procedure.

The ducts through which air is returned to the furnace should be designed to minimize resistance to air flow. They should be of ample area, with sizes selected according to capacity and construction, as specified in section, Outline of Design Procedure, and should be streamlined. Avoid fittings which would require lifting of the return air after the duct has passed under some obstacle.

Ducts returning air to the furnace should be protected from heat sources tending to reheat the return air. If the duct must be run over the top of the furnace, or above the vent pipe from the furnace, insulation should be interposed between the heat source and the duct.

The top of the return shoe should enter the casing below the level of the grate of a coal furnace, and not more than 14 in. above the floor of an oil or gas furnace. It must be wide enough to retain proper area.

OUTLINE OF DESIGN PROCEDURE

The data underlying the design procedure are given in detail in a circular[2] issued by the *University of Illinois*. In this procedure the design of the warm-air duct system is considered as an entire unit, so that for a given heat loss the sizes of leaders, stacks, boots, stackheads, and registers are