PLAINTIFF'S EXHIBIT

ASI-457

AMERICAN STANDARD

PFA-5 BOILER

LIGHT OIL, GAS,
COMBINATION
GAS-LIGHT OIL

INSTRUCTION MANUAL

BOILER-BURNER UNITS

1-5-70 ??

NOTICE TO INSTALLER AND OPERATOR
THIS BOOKLET MUST BE AFFIXED ON OR ADJACENT TO THE HEATING EQUIPMENT

FORM NO. HP-31028-02

SERIES NO. 1B-J1

TABLE OF CONTENTS

ITEM	PAGE NO.
General Information	1
Setting the Unit	1
Chimney or Vent	1
Air Supply	1
Ratings - Data	2-6
Altitude Corrections	7
Section Assembly	7-21
Tankless Water Heater Ratings, Installation	15
Boiler Piping	21
Assembly of Jacket	21-27
Steam Trim	27
Water Trim	27
Burner Installation	27
Boiler With Jacket Extension	32
Filling Boiler	32
Attention to Boiler While in Operation	32-34
Cleaning Steam Boiler	34
Attention to Boiler While Not in Operation	34-35
General Maintenance of Heating System	35
Repair Parts	35

GENERAL INFORMATION

The PFA-5 is the latest development in large cast iron boiler technology. Designed specifically for forced draft firing, the boiler is available with light oil, gas, or combination gas-light oil burners and operates with an efficiency of over 80%.

In addition to the advantages of forced draft firing - the elimination of the need for external draft devices such as a high chimney or mechanical draft equipment - the PFA-5 features: compact, light weight; wet base design; no separate base or combustion chamber; provision for multiple tankless heaters; 4 thru 21 sections ranging from 620 Mbh to 3,430 Mbh gross output; and the availability of factory assembled section assemblies.

This manual gives the necessary information for the proper installation, operation maintenance, and service of the units. For special installation problems contact American Standard, Hydronics Department, 25 Rano Street, Buffalo, New York. Ratings and data are given in Table I. Dimensional information is given in Figures 1, 2 and 3.

SETTING THE UNIT

The unit should be located in the boiler room so as to provide ease of venting and adequate clearance for maintenance, serviceability and installation of piping. A minimum clearance of 3 feet should be allowed on each side of the unit for cleaning of flues and for tankless water heater installation.

Floor construction should have adequate load bearing characteristics to bear the weight of the boiler filled with water. A boiler foundation similar to the one shown in Figure 4 is recommended if the boiler room floor is weak or uneven or if a water condition exists.

If the boiler is set on a combustible floor, a 1" thick layer of foil-faced insulation or equivalent should be placed beneath the boiler foil side up.

CHIMNEY OR VENT

The PFA-5 series boiler is designed for forced-draft firing and may be used with a conventional natural draft stack or a stub vent (see Figure 5). See Table I for the proper vent size. Draft controls are not normally required, although they may be used on installations where a natural draft stack is used or on multiple boiler installations with a common stack. The boiler is provided with a breeching damper which should be secured in the open position unless high breeching draft makes burner adjustment difficult.

AIR SUPPLY

A sufficient air supply should be maintained at all times to the boiler room for proper performance of the unit. A permanent opening or duct should be provided such that the boiler input will not exceed 5,000 Btuh/in^2 of free area.

PFA-5

TABLE I

RATINGS - - - DATA

BUILT TO ASME SPECIFICATION

*Boiler Model No.	Boiler H. P.	Gross I= B= R Output (Mbh)	Net I= B= R Rating Steam (Sq. Ft.)	Net I= B= R Rating Steam (Mbh)	Net I= B= R Rating Water (Mbh)	I= B= R Burner Capacity Light Oil (GPH)	I= B= R Burner Capacity Gas (Mbh)	** Gas Press. Required ("w.c.)	Heating Surface ($Ft.^2$)	Net Firebox Volume ($Ft.^3$)	*** Maximum Press. In Firebox ("w.c.)	Water Content-Full (Lbs.)	I= B= R Vent Dia. (")
PFA-504	18.5	620	1,938	465.1	539.1	5.45	763	5.1	66	8.5	.244	581	10
PFA-505	23.4	784	2,451	588.1	681.7	6.90	966	6.3	85	11.1	.244	700	10
PFA-506	28.4	950	2,969	712.7	826.1	8.35	1,169	6.0	104	13.7	.245	818	10
PFA-507	33.3	1,116	3,488	837.2	970.4	9.80	1,372	6.4	123	16.3	.245	937	10
PFA-508	38.2	1,280	4,010	962.4	1,113.0	11.20	1,568	6.6	142	18.9	.246	1056	10
PFA-509	43.2	1,446	4,582	1,099.6	1,257.4	12.65	1,771	6.6	161	21.5	.246	1174	14
PFA-510	48.2	1,612	5,159	1,238.1	1,401.7	14.10	1,974	5.9	179	24.1	.247	1293	14
PFA-511	53.1	1,776	5,728	1,374.6	1,544.3	15.55	2,177	5.7	198	26.8	.247	1412	14
PFA-512	58.1	1,944	6,289	1,509.3	1,690.4	16.95	2,373	6.8	217	29.4	.248	1530	14
PFA-513	63.0	2,108	6,819	1,636.6	1,833.0	18.40	2,576	6.4	236	32.0	.248	1649	14
PFA-514	67.9	2,272	7,350	1,764.0	1,975.7	19.85	2,779	6.3	255	34.6	.249	1768	14
PFA-515	72.9	2,440	7,893	1,894.4	2,121.7	21.25	2,975	6.2	274	37.2	.249	1886	14
PFA-516	77.8	2,604	8,424	2,021.7	2,264.3	22.70	3,178	6.1	293	39.8	.250	2005	18
PFA-517	82.7	2,768	8,954	2,149.1	2,407.0	24.15	3,381	5.6	312	42.4	.250	2123	18
PFA-518	87.7	2,936	9,498	2,279.5	2,553.0	25.60	3,584	6.2	330	45.0	.251	2242	18
PFA-519	92.6	3,100	10,028	2,406.8	2,695.7	27.00	3,780	6.3	349	47.6	.251	2361	18
PFA-520	97.4	3,260	10,546	2,531.1	2,834.8	28.45	3,983	6.9	368	50.2	.252	2479	18
PFA-521	102.5	3,430	11,096	2,663.0	2,982.6	29.90	4,186	7.6	387	52.8	.252	2598	18

* Suffix "S" indicates steam boiler, "W" indicates water boiler.
Suffix "G" indicates gas-fired, "O" indicates oil-fired, "GO" indicates combination gas-oil fired.

** Minimum gas pressure required at std. gas train inlet for maximum burner input based on 1000/Btu/cu. ft. 0,60 specific gravity gas.

*** With positive pressure of 0.10 inches water column at boiler flue outlet sampling hole between boiler and breeching damper.

04834

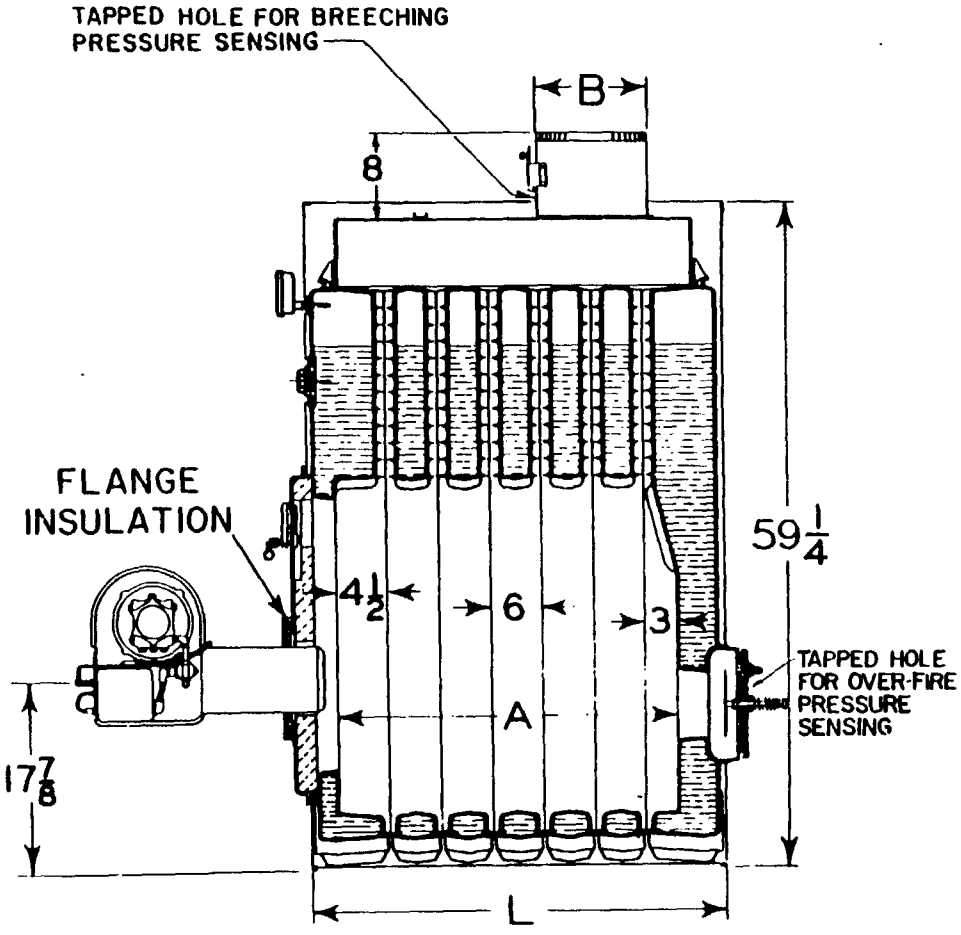

NUMBER OF SECTIONS	DIMENSIONS		
	L	A	B
4	25 3/4	19 1/2	10
5	31 3/4	25 1/2	10
6	37 3/4	31 1/2	10
7	43 3/4	37 1/2	10
8	49 3/4	43 1/2	10
9	55 3/4	49 1/2	14
10	61 3/4	55 1/2	14
11	67 3/4	61 1/2	14
12	73 3/4	67 1/2	14
13	79 3/4	73 1/2	14
14	85 3/4	79 1/2	14
15	91 3/4	85 1/2	14
16	97 3/4	91 1/2	18
17	103 3/4	97 1/2	18
18	109 3/4	103 1/2	18
19	115 3/4	109 1/2	18
20	121 3/4	115 1/2	18
21	127 3/4	121 1/2	18

FIGURE 1 - SECTION THRU BOILER WITH FLUSH JACKET

NUMBER OF SECTIONS	DIMENSIONS L	A	B
4	25 3/4	10	12
5	31 3/4	10	12
6	37 3/4	10	12
7	43 3/4	10	12
8	49 3/4	10	12
9	55 3/4	14	12
10	61 3/4	14	12
11	67 3/4	14	12
12	73 3/4	14	27
13	79 3/4	14	33
14	85 3/4	14	39
15	91 3/4	14	45
16	97 3/4	18	51
17	103 3/4	18	57
18	109 3/4	18	63
19	115 3/4	18	69
20	121 3/4	18	75
21	127 3/4	18	81

NUMBER OF SECTIONS	DIMENSIONS			
	K	L	A	B
4	60	25 3/4	10	12
5	66	31 3/4	10	12
6	72	37 3/4	10	12
7	78	43 3/4	10	12
8	84	49 3/4	10	12
9	90	55 3/4	14	12
10	96	61 3/4	14	12
11	102	67 3/4	14	12
12	108	73 3/4	14	27
13	114	79 3/4	14	33
14	120	85 3/4	14	39
15	126	91 3/4	14	45
16	132	97 3/4	18	51
17	138	103 3/4	18	57
18	144	109 3/4	18	63
19	150	115 3/4	18	69
20	156	121 3/4	18	75
21	162	127 3/4	18	81

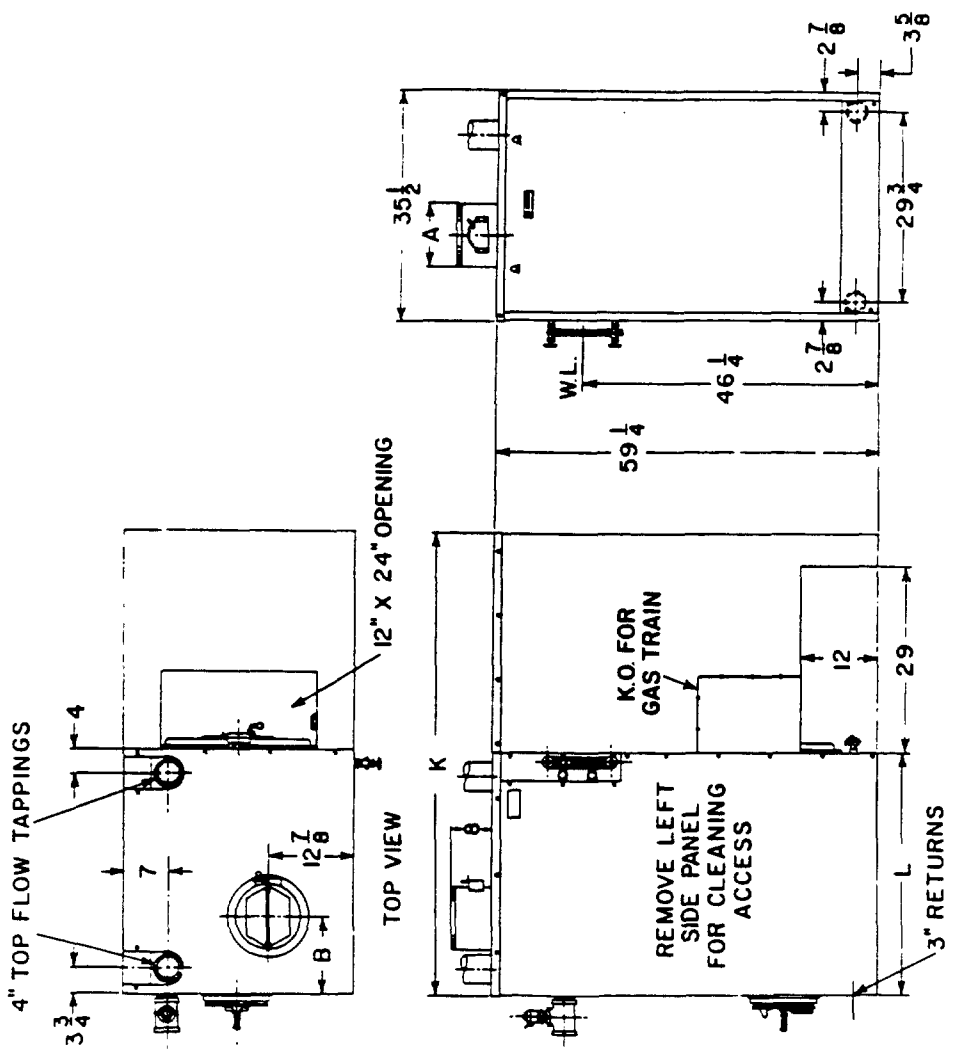

FIGURE 3 – DIMENSIONS FOR BOILER WITH EXTENDED JACKET

04837

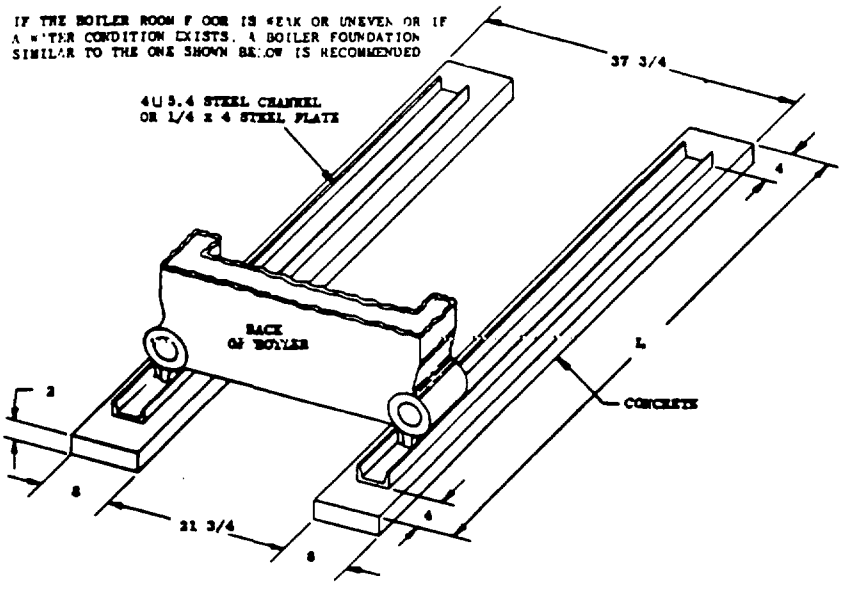

L	NO. OF SECTIONS
33"	4
39"	5
45"	6
51"	7
57"	8
63"	9
69"	10
6'-3"	11
6'-9"	12
7'-3"	13
7'-9"	14
8'-3"	15
8'-9"	16
9'-3"	17
9'-9"	18
10'-3"	19
10'-9"	20
11'-3"	21

FIGURE 4 - SUGGESTED BOILER FOUNDATION

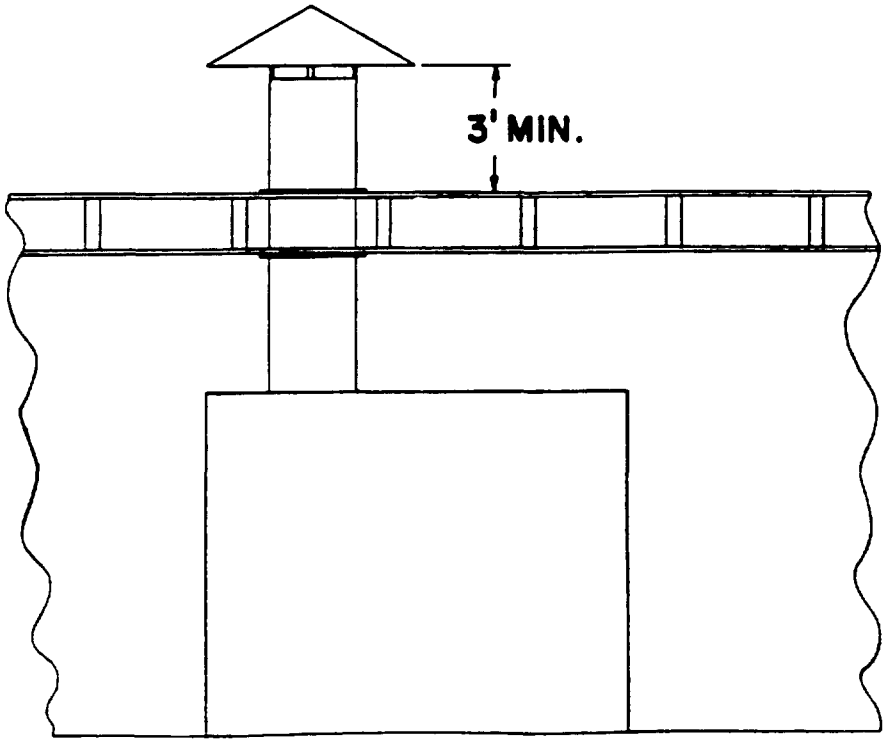

FIGURE 5 - TYPICAL ARRANGEMENT FOR STUB VENT

ALTITUDE CORRECTIONS

Ratings shown in Table I apply at altitudes up to 1000 feet on oil and 2000 feet on gas. For altitudes above those indicated the ratings should be reduced at the rate of 4% for each 1000 feet above sea level.

SECTION ASSEMBLY

If the boiler was ordered factory assembled, the assemblage should be set in the proper location. Lifting arrangement and weights are given in Figure 6. The tie rod nuts should then be loosened until finger tight. After a hydrostatic test has been run on the assemblage, attach the cleanout cover radiation shield(s), and proceed to "Boiler Piping".

If the boiler was ordered to be field assembled, follow the assembling procedure outlined below:

A. Arrangement of Sections

The sections must be assembled according to the arrangement listed in Figure 7 to insure proper operation and proper alignment of piping with jacket knockouts.

B. Assembly of Sections (Manual Draw-Up)

1. Place the back section in its approximate final location with regard to the chimney and support it with a suitable prop. It is recommended that a 2-1/2" plug be installed hand-tight in the back to hold the upper end of the prop. See Figure 8.

2. Clean nipples and nipple openings with kerosene or gasoline and coat nipple with nipple paint packed in Misc. Box. A heavy bodied lubricating oil may be used but should be applied to both nipple and port.

3. Drive nipples squarely (thick end first) into section using block of wood and hammer, or preferably an aluminum headed hammer, if available.

4. Special nipple setting gauges are provided for the nipples. Gauge nipple in both directions to insure that it is driven to the proper depth into the nipple opening. Cut-out in gauge must rest on nipple, with legs of gauge touching finished face of section, when nipple is properly driven. See Figure 9.

   IMPORTANT - NIPPLES MUST BE DRIVEN AS DIRECTED TO INSURE TIGHT JOINTS. MOST NIPPLE LEAKS ARE CAUSED BY TILTED OR COCKED NIPPLES.

NO. OF SECTS.	LIFTING WEIGHT	MIN. SLING LENGTH "L"
4	1650	7'-6"
5	2000	7'-10"
6	2300	8'-2"
7	2650	8'-6"
8	2950	8'-10"
9	3300	9'-2"
10	3650	9'-6"
11	3950	9'-10"
12	4300	10'-2"

NO. OF SECTS.	LIFTING WEIGHT	MIN. SLING LENGTH "L"
13	4600	10'-6"
14	4950	10'-10"
15	5300	11'-2"
16	5600	11'-6"
17	5950	11'-10"
18	6300	12'-2"
19	6600	12'-6"
20	6950	12'-10"
21	7300	13'-2"

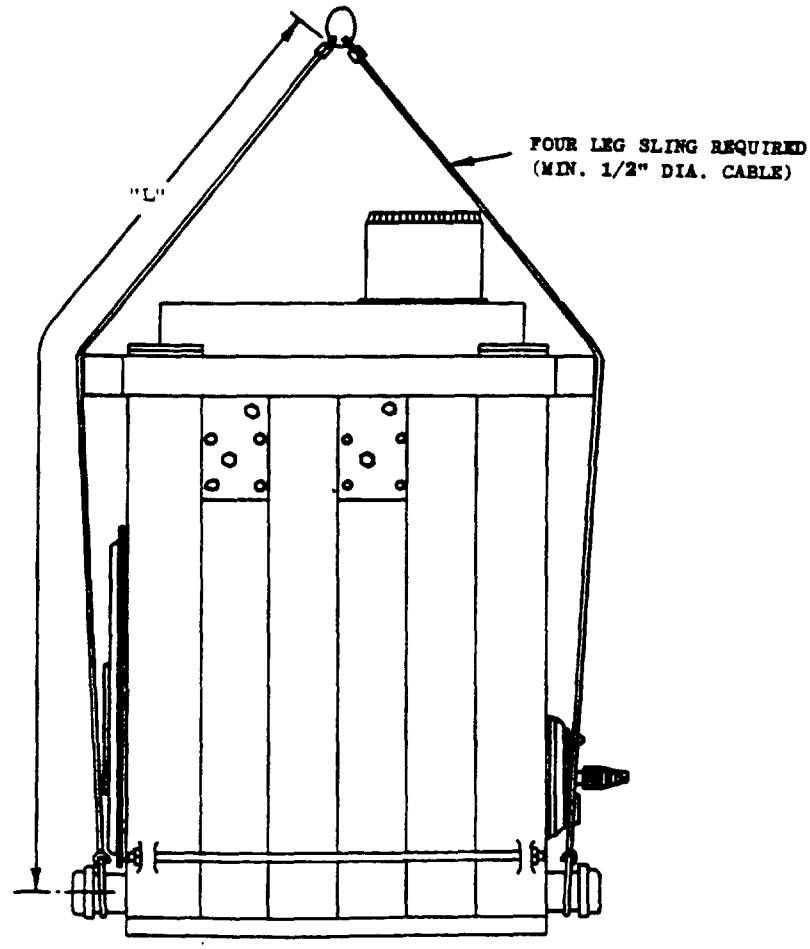

Rev. 7/23/69

FIGURE 6 - FACTORY ASSEMBLED SECTION LIFTING ARRANGEMENT
(30003)

SECTION ARRANGEMENT

CODE LETTERS

FX- FRONT SECTION WITH 4" TOP TAPPING C- CENTER SECTION CX-CENTER SECTION W/4" TOP TAPPING

CT- CENTER SECTION W/T.W.H. OPENING BX- BACK SECTION WITH 4" TOP TAPPING

4	FX	CT	C	BX																
5	FX	CT	C	CT	BX															
6	FX	CT	C	CT	C	BX														
7	FX	CT	C	CT	C	CT	BX													
8	FX	CT	C	CT	C	CT	C	BX												
9	FX	CT	C	CT	C	CT	C	CT	BX											
10	FX	CT	C	CT	CX	CT	C	CT	C	BX										
11	FX	CT	C	CT	C	CT	CX	CT	C	C	BX									
12	FX	CT	C	CT	C	CT	CX	CT	C	CT	C	BX								
13	FX	CT	C	CT	C	CT	CX	CT	C	CT	C	C	BX							
14	FX	C	C	CT	CX	CT	C	CT	CX	CT	C	CT	C	BX						
15	FX	C	C	CT	CX	CT	C	CT	CX	CT	C	CT	C	CT	BX					
16	FX	C	C	CT	CX	CT	C	CT	C	CT	CX	CT	C	CT	C	BX				
17	FX	C	C	CT	CX	CT	C	CT	C	CT	CX	CT	C	CT	C	C	BX			
18	FX	C	C	CT	CX	CT	C	CT	C	CT	CX	CT	C	CT	CX	CT	C	BX		
19	FX	C	C	CT	CX	CT	C	CT	C	CT	CX	CT	C	CT	CX	CT	C	C	BX	
20	FX	C	C	CT	C	CT	CX	CT	C	CT	CX	CT	C	CT	C	CT	CX	CT	C	BX
21	FX	C	C	CT	C	CT	CX	CT	C	CT	CX	CT	C	CT	C	CT	CX	CT	C	C	BX

1.

NOTE: For boilers less tankless water heaters replace the "CT" sections with "C" sections.

Figure 7

04841

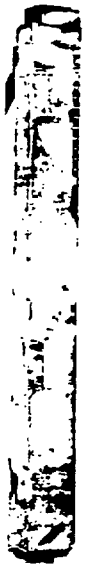

FIGURE 8 - POSITIONING OF BACK SECTION



FIGURE 9 - SETTING (NIPPLES

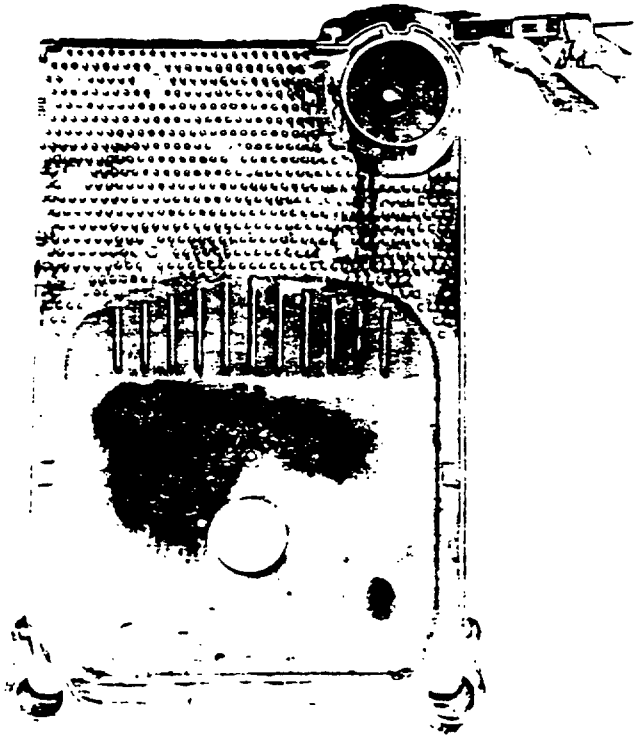

APPLY 1/4" DIA. BEAD OF SEALANT TO GROOVES

FIGURE 10 - APPLICATION OF SEALANT

SECTION ASSEMBLY (Cont'd.)

B. Assembly of Sections (Manual Draw-Up) (Cont'd.)

5. IMPORTANT - THIS IS A FORCED-DRAFT FIRED BOILER AND SEALANT MUST BE APPLIED WHERE SPECIFIED FOR PROPER PERFORMANCE.

TWO COMPOUNDS HAVE BEEN APPROVED FOR USE -- SILASTIC 90-086 RTV (BLACK) MANUFACTURED BY DOW CORNING CORPORATION, OR G-E RTV-103 (BLACK) MANUFACTURED BY GENERAL ELECTRIC COMPANY.

The grooves in the ground joint along the edge of the section should be cleaned with a wire brush. Then using a cartridge of sealant in a caulking gun, apply a smooth, 1/4" diameter bead to the grooves. See Figure 10.

IMPORTANT - SECTIONS MUST BE PULLED UP TIGHT WITHIN FOUR HOURS AFTER APPLICATION OF THE SEALANT.

6. From arrangement of sections (see Figure 7) select next section according to code letters on section.

IMPORTANT - SECTIONS MUST BE ASSEMBLED IN PROPER ORDER.

Clean nipple openings and place section on nipples in back section. To facilitate assembly, it is advisable to enter the upper nipple first in its port, then enter the lower nipples in their respective ports.

7. Insert the three tie rods through the nipple ports in the intermediate section extending them through the tapped holes in the back section. Place the three plain assembly draw-up blocks together with nuts and washers on the tie rods (back section side).

Place large draw-up clamp block on the upper rod and small draw-up clamp block on each of the lower rods. Insert loose jaws in clamp blocks and tap lightly with hammer to insure tight grip on rods. See Figures 11 and 12.

8. Drive section in place with heavy block of wood, striking blows as squarely as possible over nipples. Draw-up evenly on all tie rod nuts starting with lower tie rods, but only after driving the section up at regular intervals with the heavy block of wood to relieve tension on the tie rod threads. Continue assembling sections in their respective order.

WHEN ASSEMBLING SECTIONS WITHOUT HYDRAULIC DRAW-UP EQUIPMENT, NEVER ASSEMBLE MORE THAN ONE SECTION AT A TIME.

Be sure to apply the sealant to the groove in the ground joints between adjacent sections as the boiler operates with a positive pressure in the firebox and products of combustion will escape between sections unless the sections are properly sealed. The sealant should be applied before each section is placed on the assemblage.

NOTE - AVOID DAMAGE TO THE TIE ROD THREADS WHEN ATTACHING DRAW-UP CLAMPS AND WHILE DRAWING UP SECTIONS. APPLY OIL OR GREASE FREELY TO TIE ROD THREADS WHILE ASSEMBLING SECTIONS TO PREVENT STRIPPING OF THREADS ON ROD.

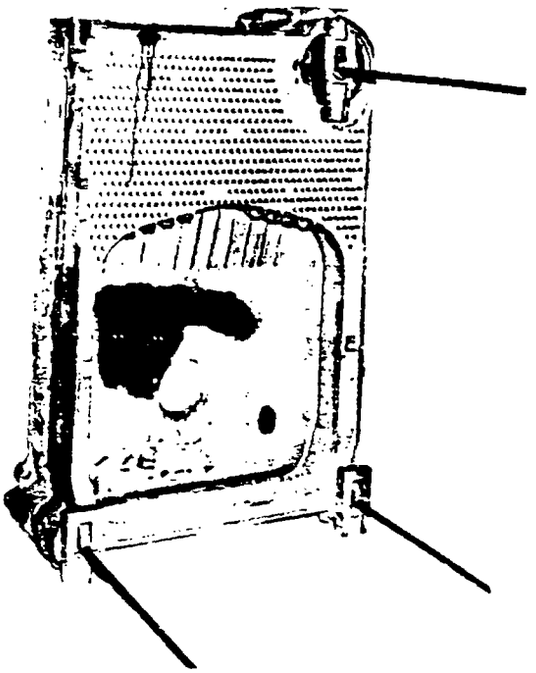

FIGURE 11 - PULL-UP ASSEMBLY

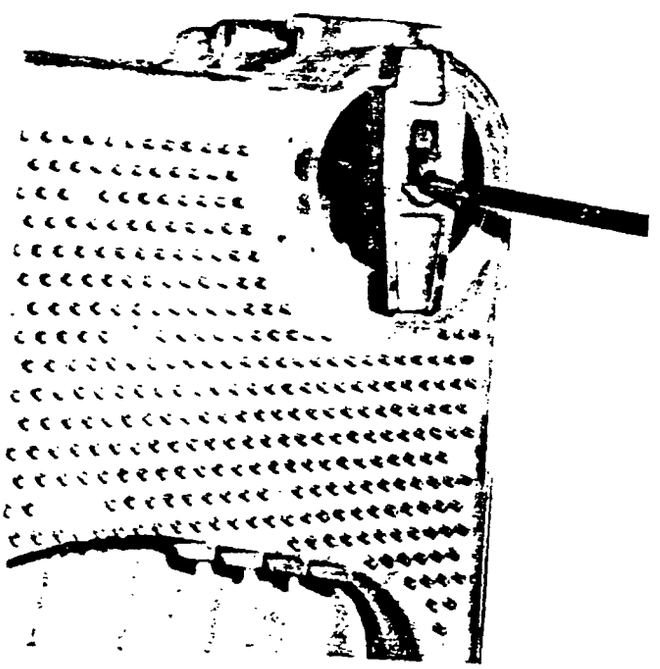

FIGURE 12 - CLAMP JAW IN POSITION

SECTION ASSEMBLY (Cont'd.)

B. Assembly of Sections (Manual Draw-Up) (Cont'd.)

9. Remove upper and lower tie rods with draw-up clamps and assembling blocks. Place front section into position and insert tie rods through the lugs on the front and back sections.

   Place regular steel nuts and flat washers on rods and draw nuts up evenly on all three rods until front and next to front sections are tight at ground joints. Adjust the nuts on the back ends of the rods so that they are no more than flush in order that as much thread as possible is available at the back to begin the draw-up operation. Draw-up evenly on all nuts as previously directed.

10. After the front section has been drawn-up to make contact at ground joint, back-off tie rod nuts until finger tight. Rods should project equally at each end to insure proper fit of the jacket. See Figure 13 for boiler section assemblage to be equipped with built in water heaters.

C. Assembly of Sections (Hydraulic Draw-Up

1. The entire assemblage may be drawn up at one time using hydraulic draw-up equipment obtainable on special order providing the operation is completed within four hours after application of the sealant.

2. Repeat steps 1 through 6 under "Assembly of Sections (Manual Draw-Up)."

3. Continue assembling sections in their respective order until all sections are in the assemblage. Be sure to apply the sealant to the groove in the ground joints between adjacent sections as the boiler operates with a positive pressure in the firebox and products of combustion will escape between sections unless the sections are properly sealed. The sealant should be applied before each section is placed on the assemblage.

4. Use 3/4" diameter rod(s) and coupling(s) to draw-up the sections (extra rods and couplings are provided with hydraulic draw-up equipment).

5. Use two steel channel blocks for the upper rod, which is inserted through the upper tappings and nipple ports. See Figure 14.

6. Use four cast iron draw-up blocks for the lower rods, which are inserted through the lower tappings and nipple ports.

7. Use hydraulic rams to draw up sections by applying pressure alternately on the draw-up rods. Continue to draw up until all sections make contact at the ground joints.

8. Remove draw-up equipment and insert regular tie rods through lugs. Rods should project equally at each end to insure proper fit of the jacket. Tighten tie rod nuts until finger tight. See Figure 13 for boiler section assemblage to be equipped with built in water heaters.

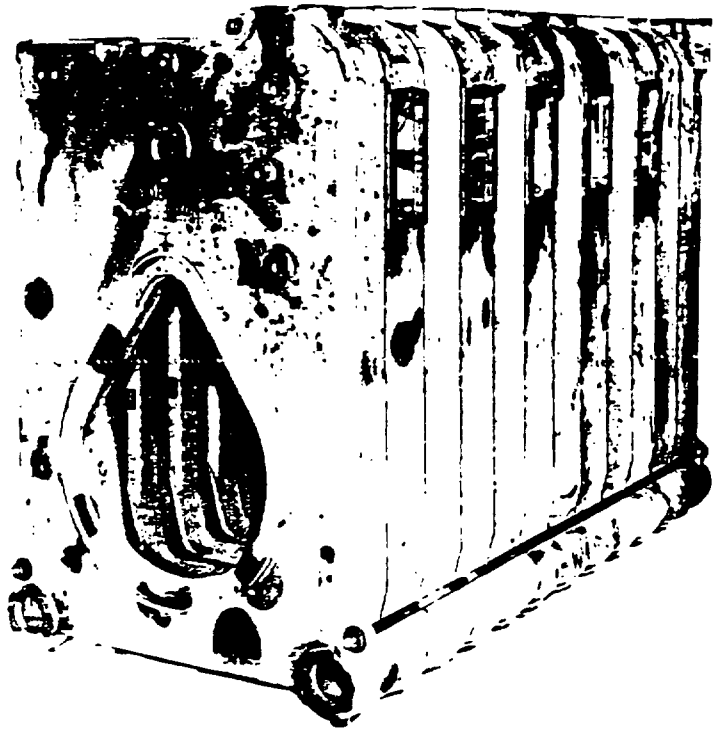

FIGURE 13 - SECTION ASSEMBLAGE

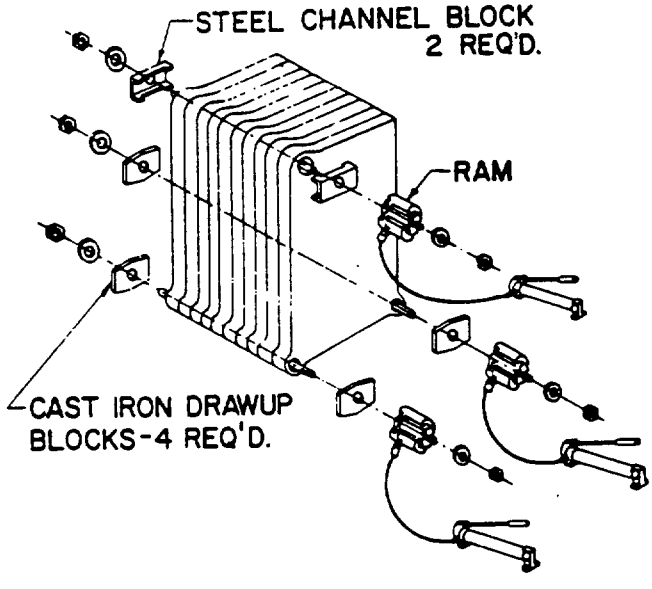

FIGURE 14 - HYDRAULIC DRAW-UP OF SECTIONS

Tankless Water Heater Ratings *

For PFA-5 Boilers (Steam and Water)

TABLE II

Boiler Model Number	Number of #548 Heaters Installed							
	1	2	3	4	5	6	7	8
PFA-504	8							
PFA-505	8	16						
PFA-506	8	16						
PFA-507	8	16	24					
PFA-508	8	16	24					
PFA-509	8	16	24	32				
PFA-510	8	16	24	32				
PFA-511	8	16	24	32				
PFA-512	8	16	24	32	40			
PFA-513	8	16	24	32	40			
PFA-514	8	16	24	32	40			
PFA-515	8	16	24	32	40	48		
PFA-516	8	16	24	32	40	48		
PFA-517	8	16	24	32	40	48		
PFA-518	8	16	24	32	40	48	56	
PFA-519	8	16	24	32	40	48	56	
PFA-520	8	16	24	32	40	48	56	64
PFA-521	8	16	24	32	40	48	56	64

* Ratings are given in gallons per minute continuous draw of water heated from 40 F to 140 F with 200 F boiler water.

D. Tankless Heater Installation

1. If boiler is ordered with tankless heaters, they must be installed with gaskets. Table II gives the maximum number of heaters permissible per assemblage and the heater ratings.

   IMPORTANT - THE HEATERS SHOULD BE AS CENTRALLY LOCATED AS POSSIBLE IN THE ASSEMBLAGE. SEE FIGURE 15.

2. Specifications for construction of the heater manifolds are given in Figure 16. HEATER MANIFOLDS SHOULD NOT BE INSTALLED UNTIL AFTER THE JACKET IS IN PLACE.

E. Hydrostatic Test

1. When boiler sections have been assembled, it is essential that boiler be tested before platework, jacket or piping is installed.

2. Plug all boiler tappings and fill entirely with cold water. To protect and safeguard the accuracy of steam or water gauge supplied DO NOT INSTALL GAUGE UNTIL AFTER TESTING OF BOILER

3. Testing pressure should be at least 10 pounds but should not exceed 50 pounds.



FIGURE 16 - TANKLESS HEATER ARRANGEMENT

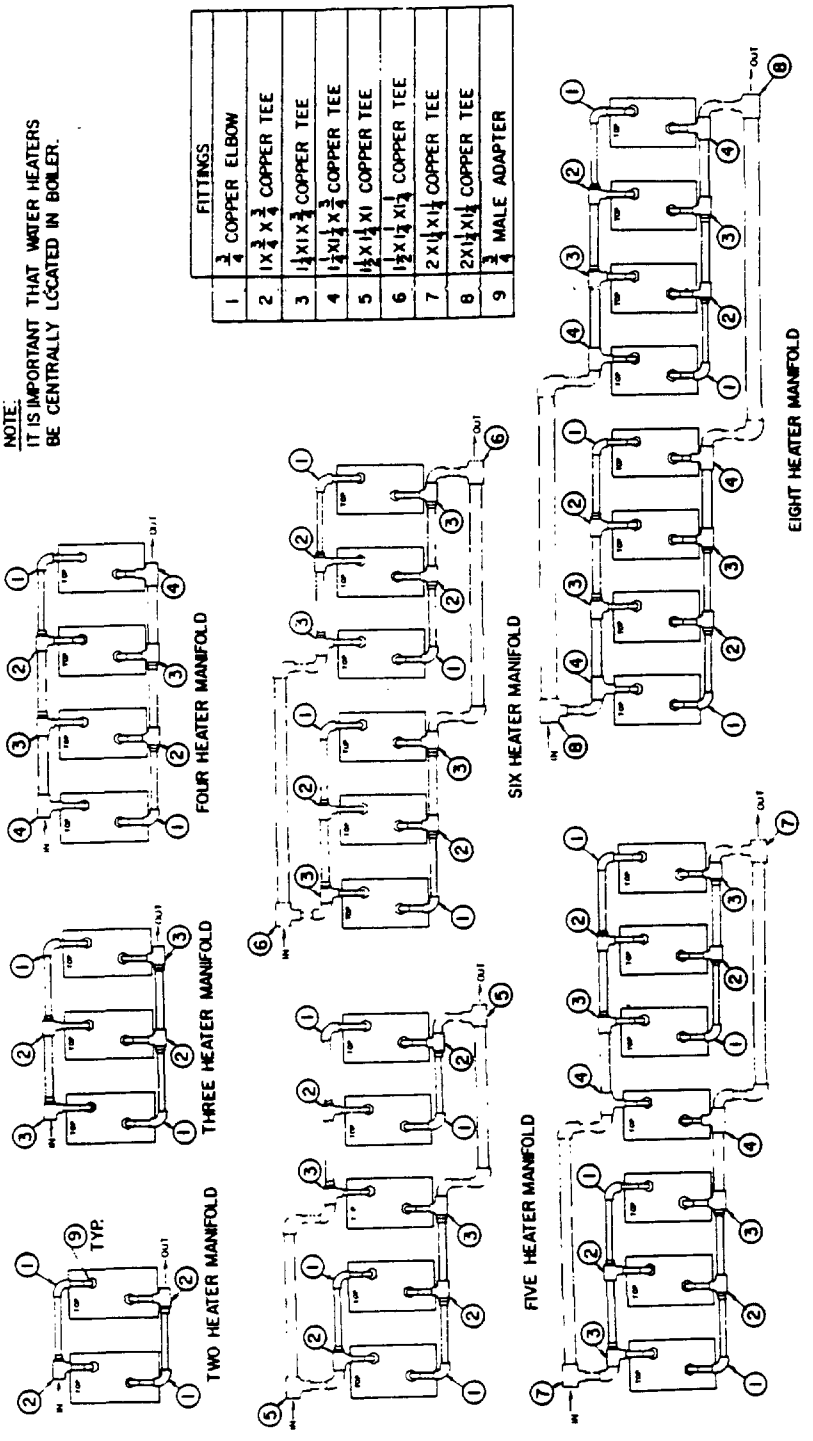

FIGURE 16 - MINIMUM PIPING RECOMMENDATIONS FOR PFA-5 TANKLESS WATER HEATER MANIFOLDS

SECTION ASSEMBLY (Cont'd.)

E. Hydrostatic Test (Cont'd.)

4. EXAMINE BOILER CAREFULLY, INSIDE AND OUTSIDE, to insure against leaks through concealed breakage caused in shipping and handling.

5. After making certain that there are no leaks, drain boiler and remove plugs for boiler trim and other connections. This precaution is for your protection and will simplify handling of necessary replacements and adjustment claims.

F. Assembly of Platework

1. Secure the cleanout covers to the boiler by the 1/4" diameter by 2" long bolts shipped with the covers. The bolts should be anchored to the slots in the cleanout openings with the head inside and a washer and nut outside. See Figure 17. The covers are placed on the bolts and tightened with washers and nuts until gaskets are compressed gas tight.

2. Place the cleanout cover radiation shield(s), insulation side out, over the bolts protruding from the cleanout covers and secure in place with the nuts shipped with the radiation shield(s).

3. The pressure relief door should be secured to the back section with the word "TOP" in the upright position. A 1/4" DIAMETER BEAD OF SEALANT SHOULD BE APPLIED TO THE GROOVE AROUND THE EDGE OF THE DOOR FRAME before securing with the 5/16" diameter by 1" long bolts provided therefore.

4. Install the refractory firewall plates on the right side of the center sections. The plates should be installed toward the front of the boiler. See Figure 18.

IMPORTANT - THIS BOILER REQUIRES NO COMBUSTION CHAMBER.

5. The burner plate should be secured to the front section with the 5/16" diameter studs provided therefore. Before installation of steel burner plates for gas and gas-oil burners, the 1/2" asbestos rope provided for steel burner plates should be glued to the front section just inside the rib to which the burner plate seats. An adapter plate is provided for mounting R6 gas and gas-oil burners to the cast iron burner plate. See Figure 19 for view showing steel burner plate installed.

G. Assembly of Canopy

1. Attach with sheet metal screws the canopy brackets to the ends of the canopy. Two piece canopies should be joined together using the sheet metal screws provided therefore.

2. Along the groove provided on top of the sections and across the top of the end sections apply a 1/2" diameter bead of sealant. A 1/2" bead of sealant will be delivered by the caulking gun by removing the plastic nozzle from the end of the tube. See Figure 20.

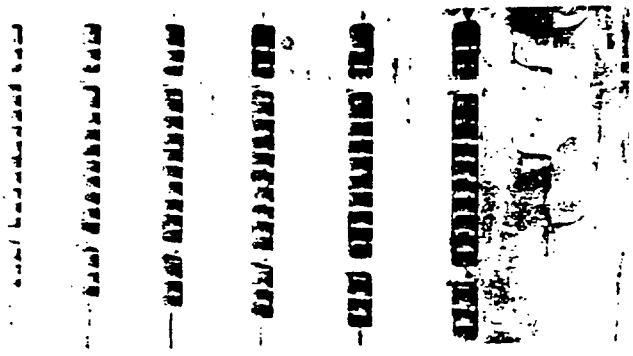

FIGURE 17 - CLEANOUT ANCHOR BOLTS

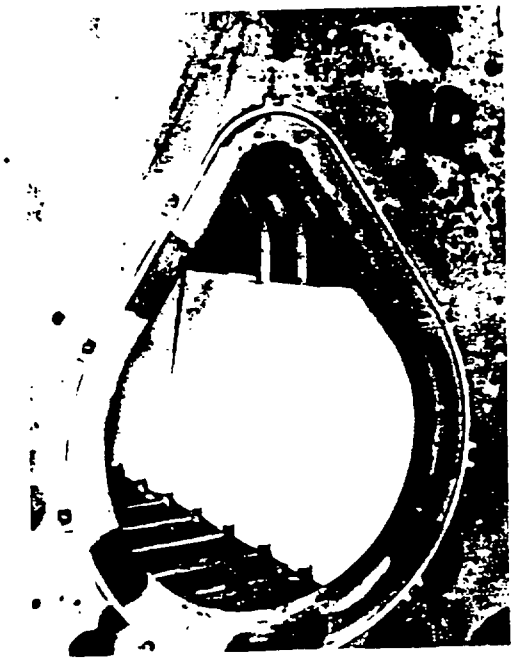

FIGURE 18 - FIREWALL PLATES

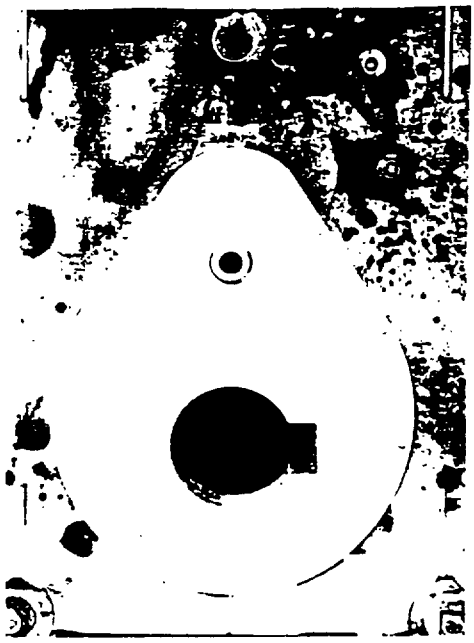

FIGURE 19 - BURNER PLATE



FIGURE 20 - AREA FOR APPLICATION OF CANOPY SEALANT

SECTION ASSEMBLY (Cont'd.)

G. Assembly of Canopy (Cont'd.)

3. Place the canopy on the sections with the word "FRONT" positioned over the front section.

4. Secure the canopy to the sections using the appropriate "J" bolts and regular bolts.

5. Check the seal between the canopy and the sections.

6. Assemble the flue thimble to the top of the canopy with the bracket toward the front of the boiler.

7. Figure 21 shows the canopy assembled to the sections with the flue thimble in place.

8. Place canopy insulation over canopy foil side up, fold down sides and secure with wire.

H. Inspection of Seal

1. After the platework is in place, a visual inspection should be made of all sealed joints and repairs made if necessary. A darkened boiler room with a light source in the combustion space and canopy will aid this inspection.

BOILER PIPING

Attach flow and return piping lines and insert plugs and bushings in sections as required. Flow and return piping headers are detailed in Figure 22 and Figure 23.

CAUTION - IT IS IMPORTANT THAT THE MINIMUM PIPING REQUIREMENTS AND ARRANGEMENTS BE COMPLIED WITH IN ORDER TO INSURE MAXIMUM RELIABILITY AND PERFORMANCE. PARTICULAR ATTENTION SHOULD BE GIVEN TO THE CONSTRUCTION OF THE HARTFORD LOOP ON STEAM BOILERS. FIGURES 23 and 24 ILLUSTRATE THE RIGHT AND WRONG WAY TO CONSTRUCT THE STEAM HEADER.

In the case of steam boilers insert two 1/2" extension pieces in tappings on left side of the front section to take gauge glass fittings. If the boiler is provided with try cocks, also insert two 3/8" extension pieces.

ASSEMBLY OF JACKET

1. Place the bottom strip for the front panel in place below the burner plate.

Install the number and series plate on the front jacket panel with #6 x 1/4" sheet metal screws provided. Install panel by sliding it down behind the flanges of the front burner plate. Attach the bottom strip to the front panel with two jacket screws. Figure 25 shows the front panel assembled to the boiler.

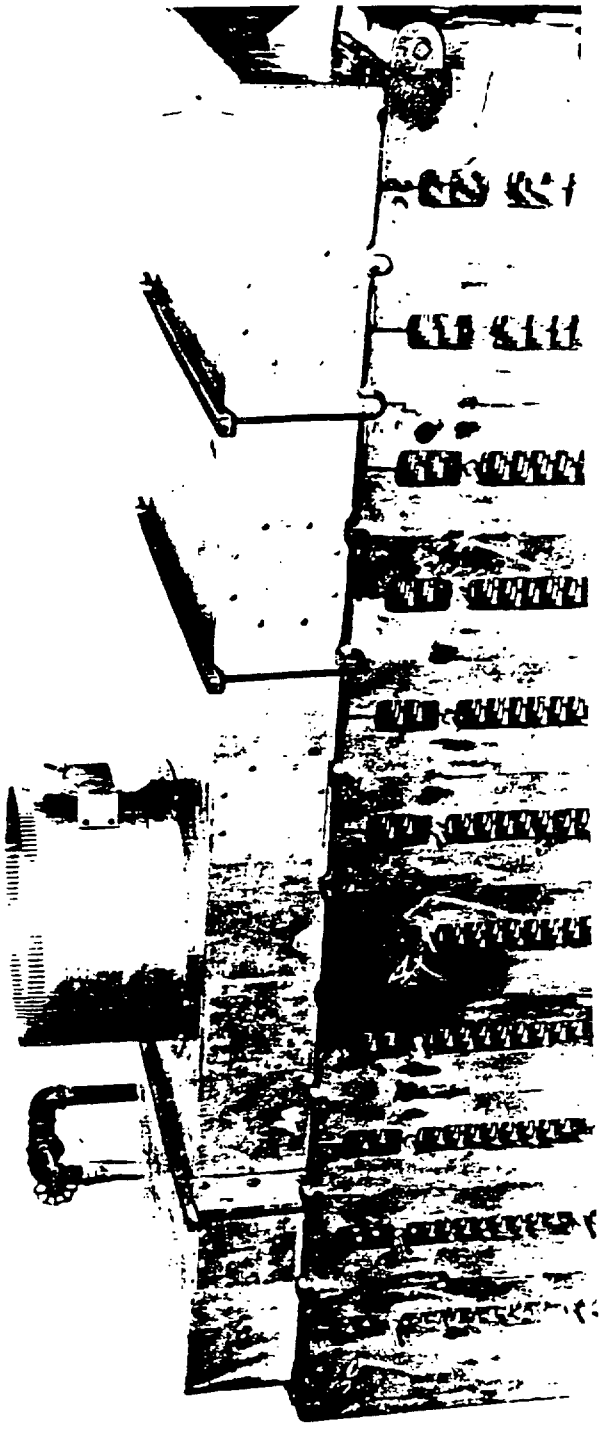

FIGURE 21 - CANOPY ASSEMBLED TO SECTIONS

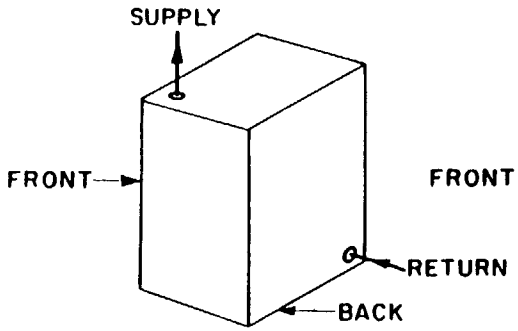

PFA-504 THRU PFA-507

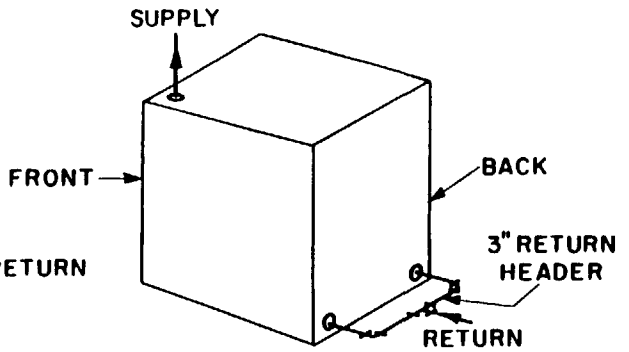

PFA-508 THRU PFA-513

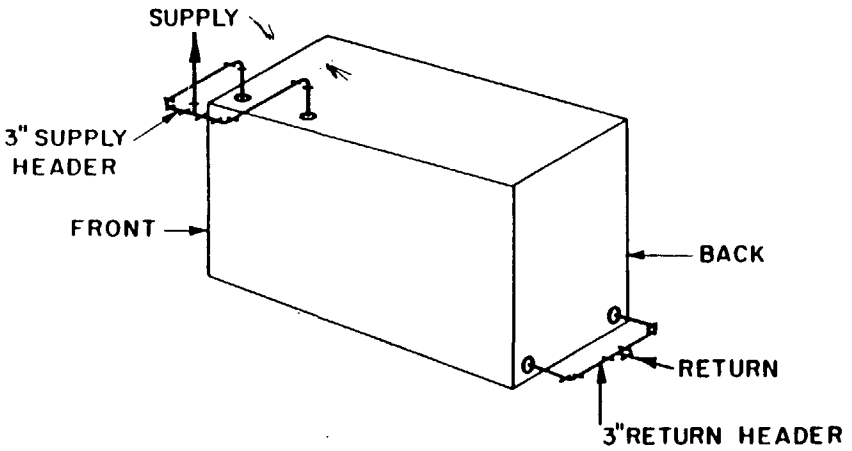

PFA-514 THRU PFA-521

BOILER NUMBER	SUPPLY AND RETURN (INCHES)
PFA-504	2 1/2
PFA-505	2 1/2
PFA-506	3
PFA-507	3
PFA-508	4
PFA-509	4
PFA-510	4
PFA-511	4
PFA-512	4
PFA-513	4
PFA-514	5
PFA-515	5
PFA-516	5
PFA-517	5
PFA-518	5
PFA-519	5
PFA-520	5
PFA-521	5

FIGURE 22 - MINIMUM PIPING REQUIREMENTS WATER BOILERS

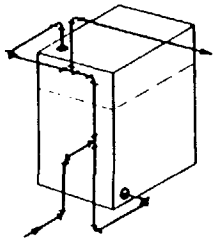

PFA-504 AND PFA-505

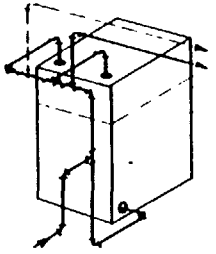

PFA-506 THRU PFA-509

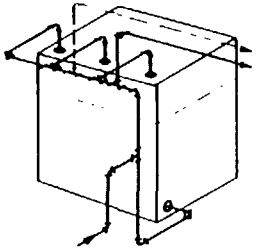

PFA-510 THRU PFA-513

BOILER NUMBER	PIPE SIZE (INCHES)			
	RISER	RETURN	HEADER	EQUALIZER
PFA-504	(1) 4	2	4	2 1/2
PFA-505	(1) 4	2	4	2 1/2
PFA-506	(2) 4	2 1/2	6	2 1/2
PFA-507	(2) 4	2 1/2	6	2 1/2
PFA-508	(2) 4	2 1/2	6	2 1/2
PFA-509	(2) 4	2 1/2	6	2 1/2
PFA-510	(3) 4	2 1/2	8	2 1/2
PFA-511	(3) 4	3	8	4
PFA-512	(3) 4	3	8	4
PFA-513	(3) 4	3	8	4
PFA-514	(4) 4	3	8	4
PFA-515	(4) 4	3	8	4
PFA-516	(4) 4	3	8	4
PFA-517	(4) 4	3	8	4
PFA-518	(5) 4	3	8	4
PFA-519	(5) 4	3	8	4
PFA-520	(5) 4	3	8	4
PFA-521	(5) 4	3	10	4

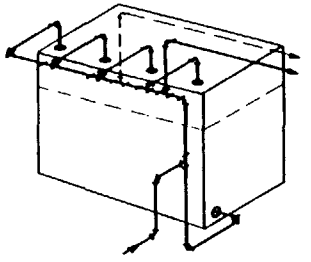

PFA-514 THRU PFA-517

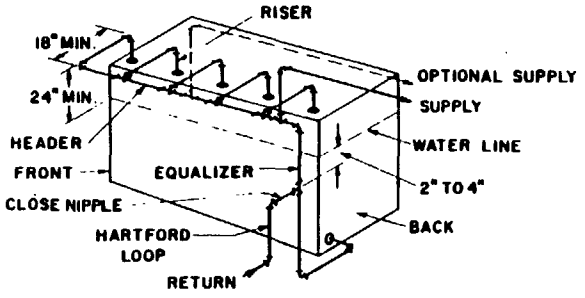

PFA-518 THRU PFA-521

FIGURE 23 - MINIMUM PIPING REQUIREMENTS STEAM BOILERS

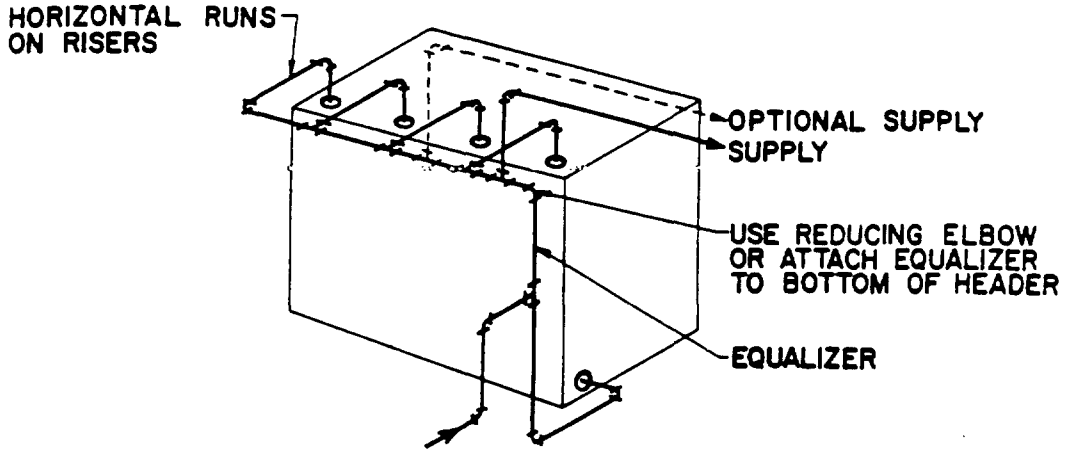

CORRECT PHYSICAL ARRANGEMENT FOR STEAM HEADERS

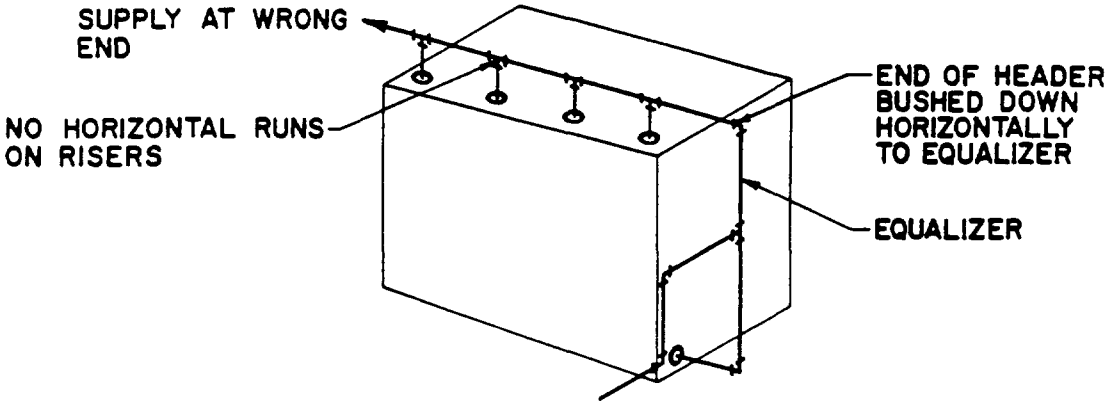

INCORRECT PHYSICAL ARRANGEMENT FOR STEAM HEADERS

FIGURE 24 - STEAM HEADER ARRANGEMENT

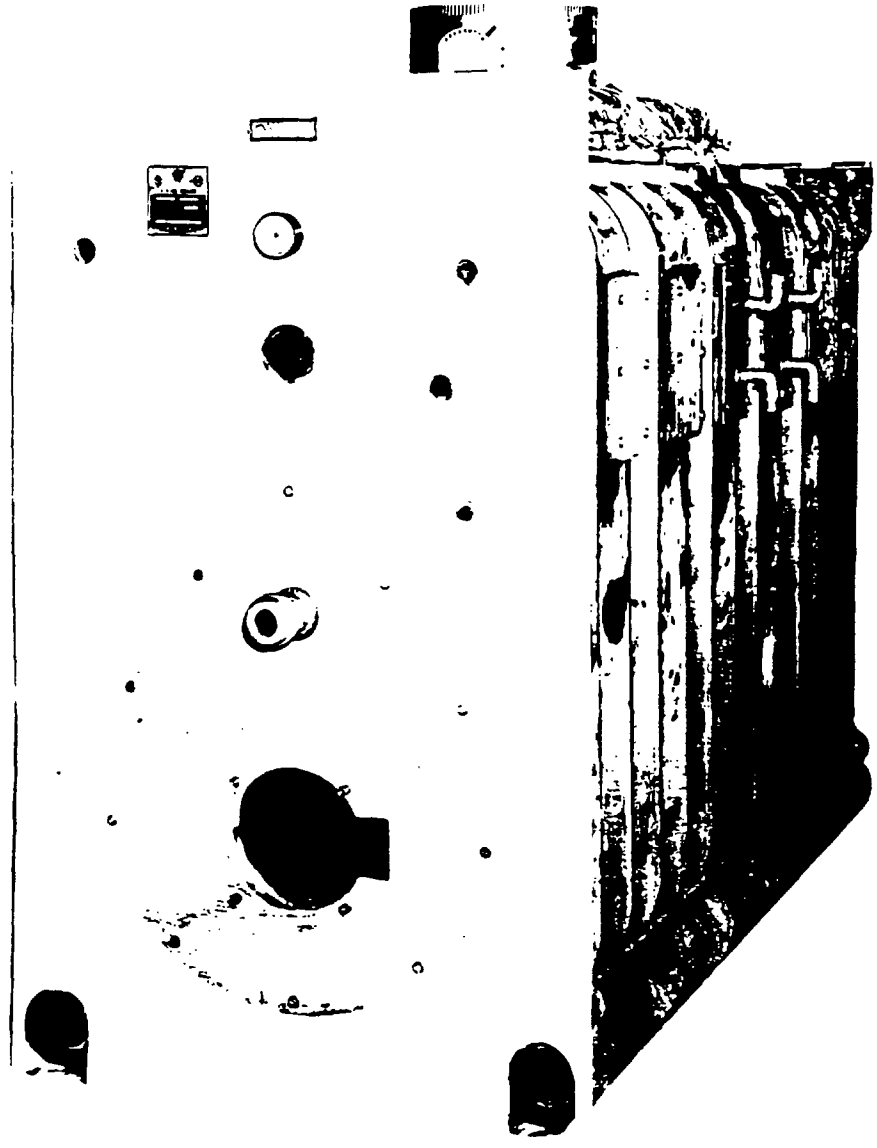

FIGURE 25 - FRONT PANEL
IN POSITION

ASSEMBLY OF JACKET (Cont'd.)

2. If the boiler has more than eight sections, the jacket side panels will consist of two pieces which should be assembled before application (in addition a small filler piece attaches to the left side panel). If the boiler has more than sixteen sections, the jacket side panels will consist of three pieces which should be assembled before application.

   Side panels should be installed following the front panel. In case of steam boilers, remove knockouts from the left side panel filler piece for gauge glass fittings and for try cocks when provided.

   When tankless heaters are used, remove the appropriate knockouts from the right hand side panel.

   Unless otherwise noted, the jacket is assembled with #10 x 1/2" sheet metal screws throughout. DO NOT DRAW SCREWS UP TIGHT UNTIL JACKET IS FULLY ASSEMBLED.

3. Assemble the back panel next, then follow with the top panel. Knockouts in the top panel are provided for supply piping clearance. Filler pieces are to be assembled to top panel where knockouts are removed. After the jacket is completely assembled, all jacket screws should be drawn-up uniformly tight, except in case of boiler provided with jacket extension. See Figure 26 for completely assembled jacket (front view) for boiler with water heaters.

STEAM TRIM

Install the water column trim in the extension fittings previously installed before the jacket was applied. Install the pressure-vacuum gauge, drain valve and controls as shown in Figure 27. Install the safety valve to the back section as shown in Figure 28. The safety valve is installed in the blow-off piping. Figure 29 shows front view of steam boiler assembled completely with water heaters.

WATER TRIM

Install the combination pressure-temperature gauge, drain valve, and controls as shown in Figure 27. Also install the pressure relief valve as shown in Figure 30. Figure 31 shows front view of water boiler assembled completely when water heaters are required.

BURNER INSTALLATION

Refer to Burner Installation and Service Manual for proper installation, fuel piping, wiring, burner adjustment and service instructions. Using a hacksaw blade or knife a hole should be cut to the proper size in the burner plate insulation for receipt of burner air tube, unless steel burner plate is provided for use with R8 and R10 burners.

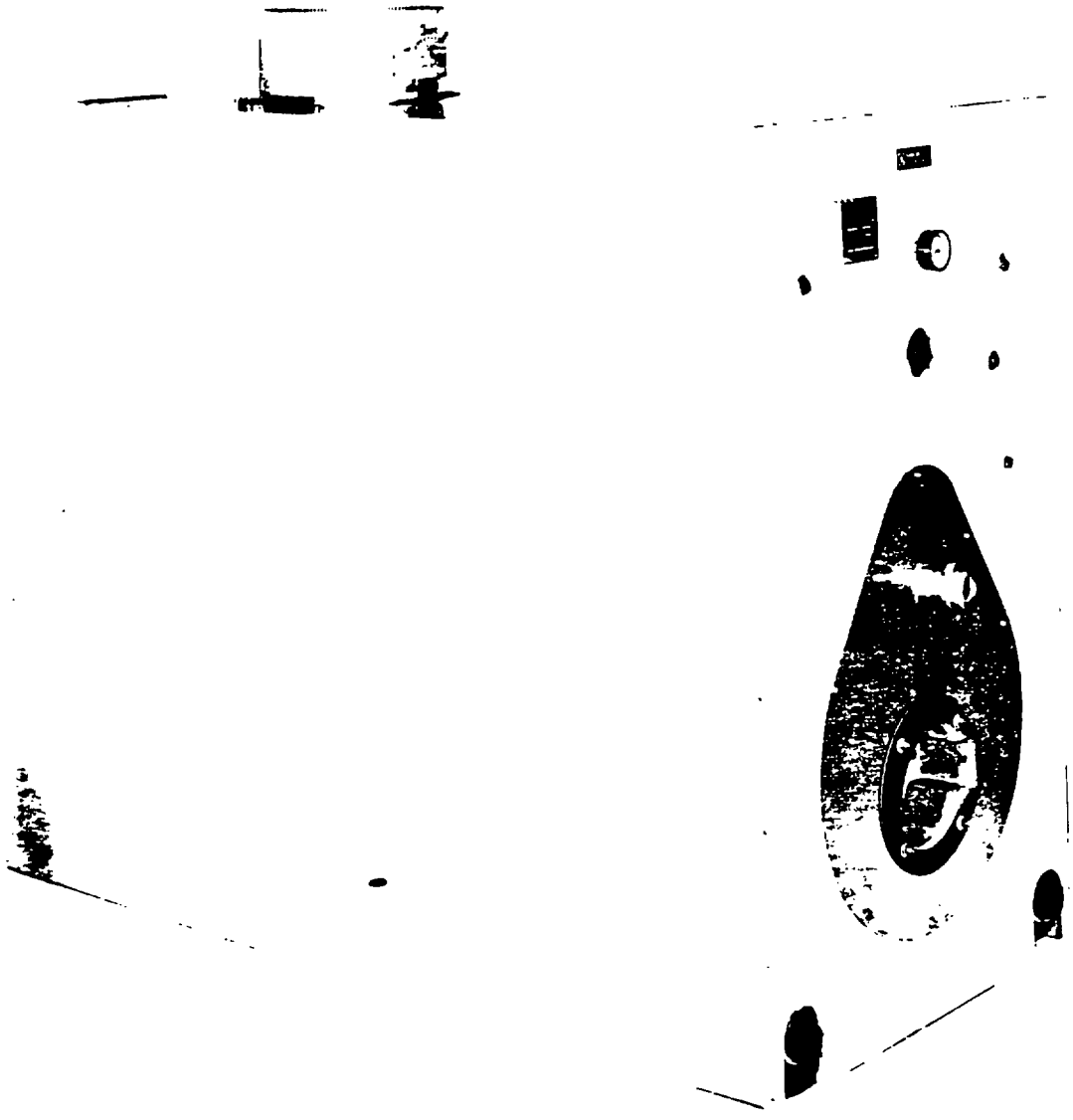

FIGURE 26 - COMPLETELY ASSEMBLED JACKET

CONTROL APPLICATIONS			
LOCATION	SIZE OF TAPPINGS	STEAM	WATER
F	2 1/2	LOW WATER CUT-OFF	NOT USED
G	3/4	PRESSURE LIMIT CONTROL	TEMPERATURE LIMIT CONTROL
H	3/4	OPERATING CONT. TANKLESS HEATER	OPERATING CONT. TANKLESS HEATER
J	1/2	PRESSURE GAGE	COMB. ALTITUDE GAGE AND THERMOMETER
K	3/4	NOT USED	NOT USED
L	3/4	NOT USED	REVERSE ACTING CONTROL
M	1/2	GAGE GLASS	NOT USED
N	1	LOW WATER CUT-OFF	NOT USED

NOTE:-2" BLOW-OFF ON BACK OF BACK SECTION
SAFETY OR RELIEF VALVE PIPED IN CONNECTION WITH BLOW OFF

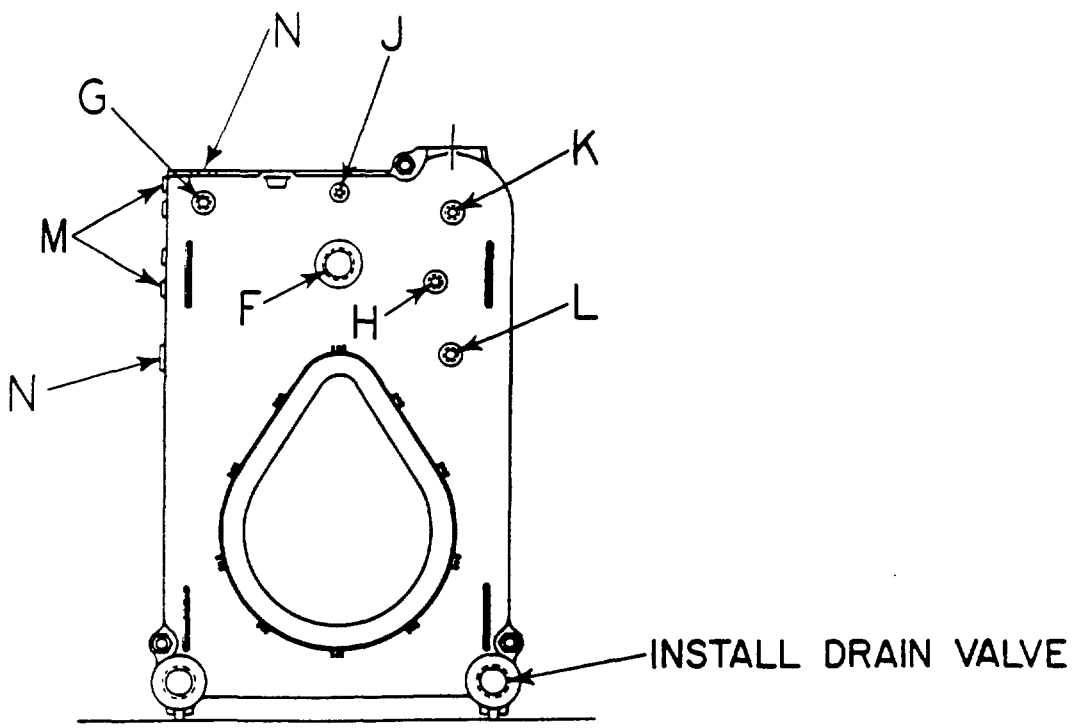

FRONT VIEW-SHOWING CONTROL TAPPINGS

[illegible] CONTROL TAPPING LOCATIONS

04861

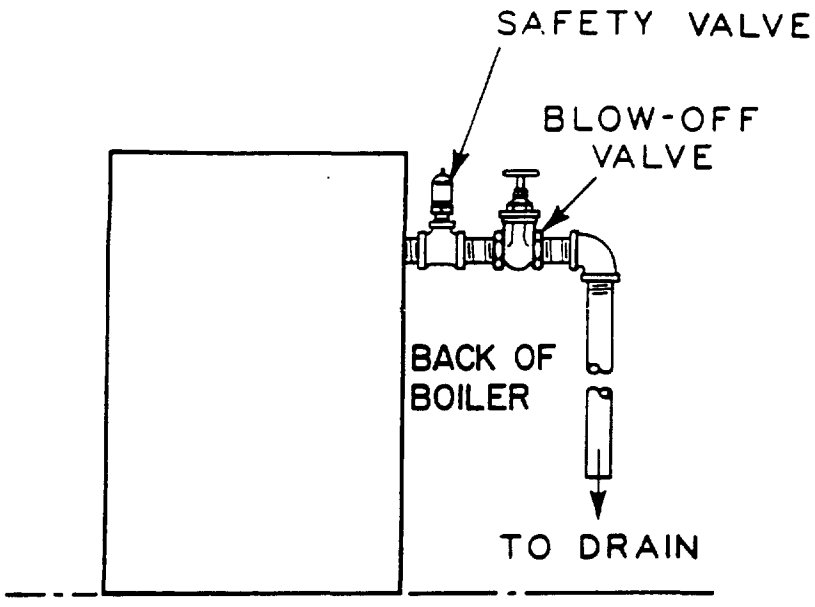

FIGURE 28 - STEAM SAFETY VALVE ARRANGEMENT



FIGURE 29 - FRONT VIEW OF STEAM BOILER

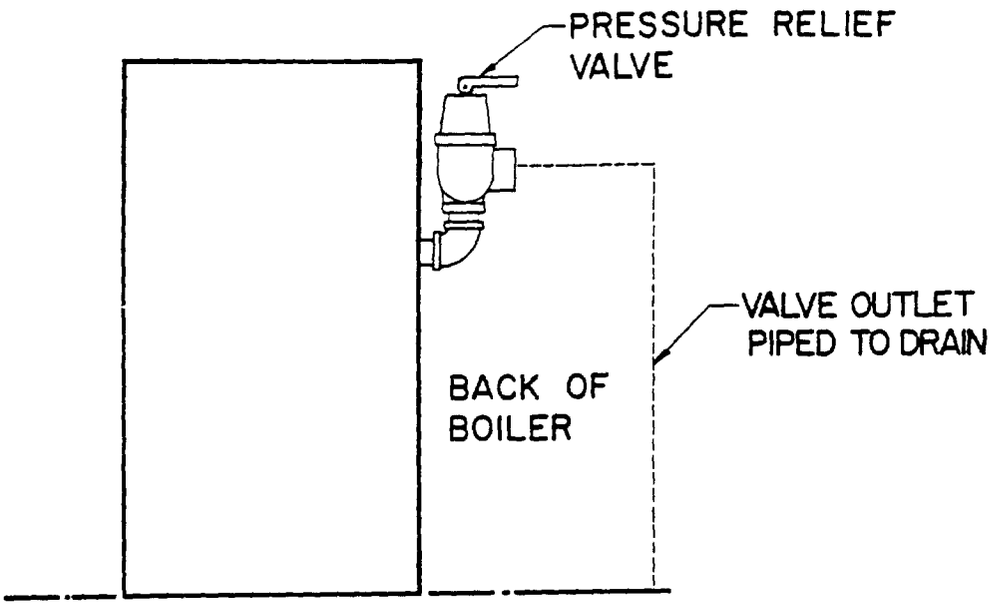

FIGURE 30 - WATER PRESSURE RELIEF VALVE ARRANGEMENT

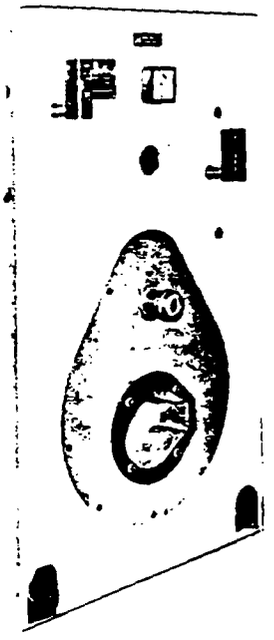

FIGURE 31 - FRONT VIEW OF WATER BOILER

BOILER WITH JACKET EXTENSION

Following are assembly operations for attaching jacket front extension to boiler after the regular (Flush Type) jacket is complete:

1. If not previously left loose, all jacket screws attaching side and top panels to the front panel must be loosened.

2. Assemble the two extension side panels with the 12" x 29" opening at the bottom and the notched edge inserted between the side and front panels. Tighten screws to hold panels in place.

3. Assemble the bottom front tie panel to the two side panels with #10 x 1" sheet metal screws provided.

4. Assemble the top extension panel with the rear edge inserted between the top and front panels on the regular jacket. It must also extend down over the side panels. Insert three jacket screws on each side and one screw at each upper front corner. Draw all screws up tight.

5. Install the front door panel by engaging the bottom flange first. Figure 32 shows boiler complete with jacket extension.

FILLING BOILER

IMPORTANT - BEFORE STARTING BURNER SEE THAT BOILER IS PROPERLY FILLED. Following filling, the piping elsewhere in the system should be checked for leaks.

Steam boilers should be filled until water is visible approximately 3-3/4 inches in gauge glass. After boiler is in operation, make-up water should be added slowly to maintain the water level.

Fill hot water systems as follows:

1. Open all radiator or convector valves, but keep vents at top of units closed.

2. Open fill valve. If an automatic fill valve is used, the water filling will stop automatically when proper pressure is reached. (Pressure should not exceed 50 pounds unless boiler is especially equipped for 80 pounds.)

3. Beginning with ground floor, vent each radiator or convector as directed above. It may be necessary to add water during this operation.

ATTENTION TO BOILER WHILE IN OPERATION

Keep water in steam boiler at proper level (approximately 3-3/4 inches high in gauge glass).

On steam boilers - at the start of each heating season and once or twice during the season try SAFETY VALVE to be sure it is in working condition. To do this, fasten wire or cord to lever of valve and pull lever - standing safe distance away from valve.

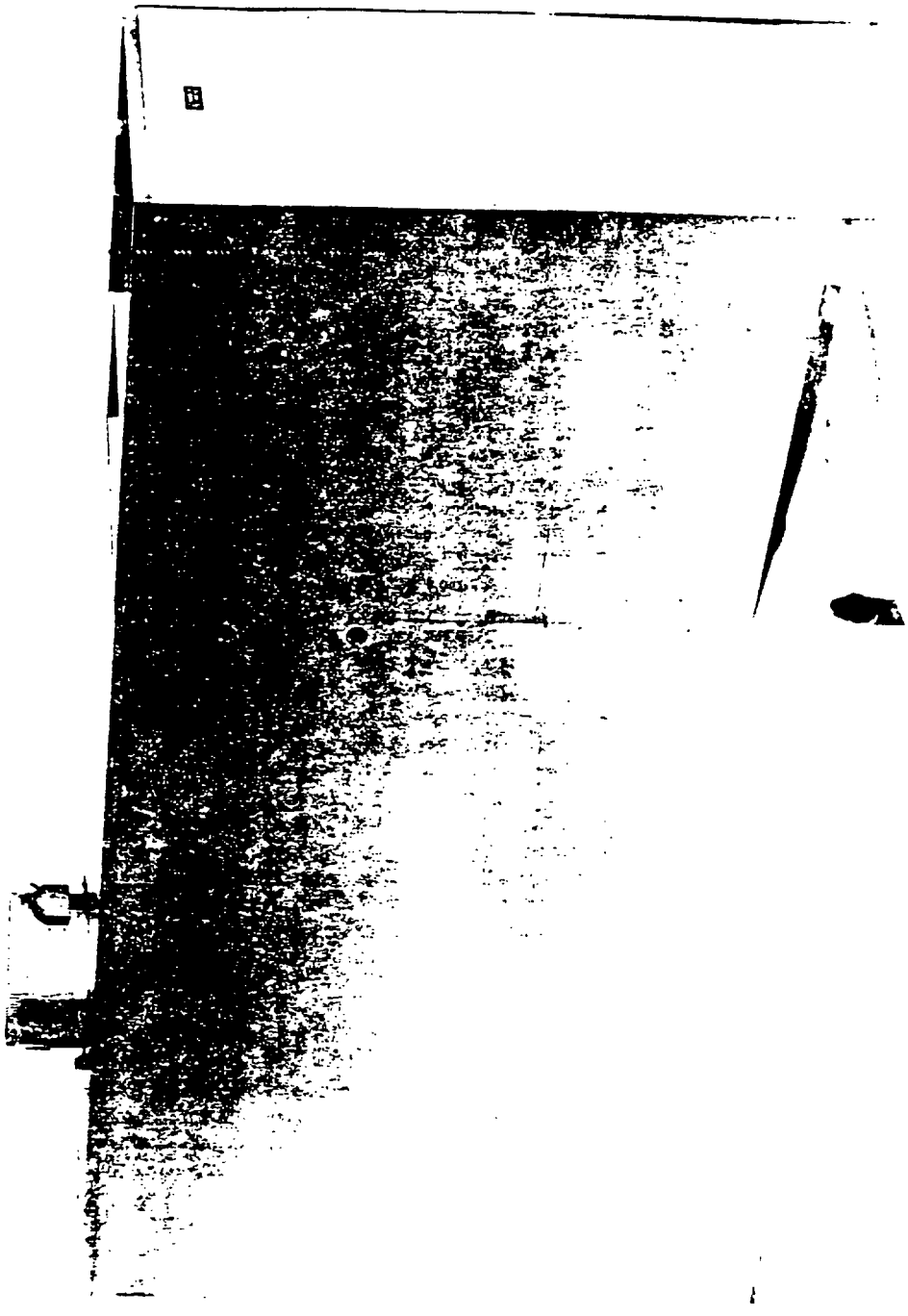

ATTENTION TO BOILER WHILE IN OPERATION (Cont'd.)

ON A HOT WATER SYSTEM THE PRESSURE MUST NOT EXCEED 50 POUNDS UNLESS THE BOILER IS EQUIPPED ESPECIALLY FOR 80 POUNDS. IF IT DOES, IT MUST BE RELIEVED IMMEDIATELY AND THE CAUSE OF RELIEF VALVE FAILURE INVESTIGATED AND CORRECTED, OTHERWISE PRESSURE MAY BUILD UP AND CAUSE DAMAGE TO HEATING SYSTEM.

DO NOT draw water from boiler while in use. When adding water while boiler is in operation, do not open supply valve fully but add water slowly.

CLEANING STEAM BOILER

The grease used to lubricate the cutting tools during erection of new piping systems serves as a carrier for dirt, with the result that a scum of fine particles and grease accumulate on the surface of the water in all new boilers, while heavier particles may settle to the bottom of the boiler and form sludge. These impurities tend to cause foaming, preventing the generation of steam and causing an unsteady water line.

This unavoidable accumulation of oil and grease should be removed by blowing-off the boiler as follows:

If not already provided, install a surface blow-off connection of at least 1-1/4" nominal pipe size with outlet extended to within 18" of the floor or to sewer, inserting a valve in line close to boiler. Bring the water line to center of outlet, raise steam pressure and while burner is operating, open valve in blow-off line. When pressure recedes, close valve and repeat process adding water at intervals to maintain proper level. As a final operation, bring the pressure in the boiler to about 10 pounds, close blow-off, stop burner and open drain valve. After boiler has cooled, partly fill and flush out several times before filling it to proper water level for normal service. The use of soda or any alkali, vinegar or any acid is not recommended for cleaning heating boilers because of the difficulty of complete removal and the possibility of subsequent injury after the cleaning process has been completed. Figure 28 shows suggested piping arrangement for blowing-off steam boilers.

ATTENTION TO BOILER WHILE NOT IN OPERATION

At end of heating season clean boiler heating surfaces thoroughly. Access to boiler canopy and flueways may be gained by removing the left hand side jacket panels and then by removing the radiation shield and section and canopy cleanout covers. Spray inside surfaces with light lubricating or crankcase oil using gun with extended stem so as to reach all corners.

Clean and remove smokepipe where feasible.

With steam boilers, at end of season add sufficient water to fill boiler to top of water column and leave it that way until fall when water should be drained again to proper level. If at this time boiler water is dirty, drain water, flush out boiler, and refill with clean water to prescribed water level.

ATTENTION TO BOILER WHILE NOT IN OPERATION (Cont'd.)

On water boilers keep system filled with water. In other words, leave water alone. It is advisable in fall to drain a little water to remove sludge but not more than necessary.

IF BOILER IS NOT USED DURING WINTER TIME, IT MUST BE FULLY DRAINED TO PREVENT FREEZE DAMAGE.

GENERAL MAINTENANCE OF HEATING SYSTEM

1. Keep radiators and convectors clean.
2. Keep system in good repair. It is advisable to have it inspected by your heating contractor at least once a year.
3. Clean boiler heating surfaces at regular intervals.
4. If a hot water radiator is hot at the bottom but not at the top, it indicates that air has accumulated inside and should be vented. To vent radiator; hold small cup under air vent (located near top of radiator), open vent until water escapes and then close.
5. If much water is added to system, it is advisable to heat system to a high temperature and vent again. This will make less venting necessary during the winter.
6. Where an expansion tank is used, make sure that neither the tank nor its drain pipe is exposed to freezing temperatures. Never place valves in piping leading to or from expansion tank.

REPAIR PARTS

GIVE BOILER MODEL NUMBER AND SERIES NUMBER WHEN ORDERING REPAIR PARTS.

CAUTION TO INSTALLERS AND OWNERS

The heat transfer surface of this boiler has been carefully designed to give optimum performance and reliability. However, the presence of contaminants such as scale or lime, sediment and boiler sealing compounds in the section waterways may cause premature failure of the sections.

If leaks occur in the system and are undetected or neglected, fresh water replaces the water lost through the leaks. Nearly all water contains dissolved minerals ("lime"). As water is heated in the boiler, the minerals are deposited, mostly at the bottom of the sections directly above the fire. No appreciable amount of lime is deposited in a system with no leaks; but when water is hard and makeup water must be added frequently and in large amounts, boiler waterways may be coated with a thick layer of lime within days or a few weeks of operation. Lime is an insulator, which causes overheating of boiler metal: if deposition of lime is not halted, the boiler will fail. To stop lime deposition, stop system leaks.

Leaks may occur occasionally in any system. These leaks are usually of such a nature that they can be prevented or corrected by good workmanship. Every effort should be made to correct them without the use of boiler sealing compounds. If compounds are used, they should be used as sparingly as possible, and never in excess of manufacturers recommendations. Following use, the boiler must be flushed out thoroughly, or serious damage is likely to result.

Sediment which may accumulate in the boiler should be flushed out in accordance with recommended maintenance practices. Excessive use of water should be avoided because of the danger of lime and corrosion buildup.

Glycol anti-freeze is sometimes added to system water to protect against freezup. Although American Standard can not recommend this practice, we realize that glycol anti-freeze will occasionally be used. Heat transfer through glycol is poorer than through water: use no more than 50 percent glycol in the system. With any proportion of glycol, radiator output will be lower than with pure water at the same temperature.
It is always better, when possible, to drain the system rather than add anti-freeze; neither the heating system nor plumbing system water will freeze so long as the heating system continues to operate; and the plumbing system is not protected against freezeup when the heating system is off, whether or not the heating system coptains anti-freeze.

Cast iron is highly resistant to corrosion. However, some propellants used in aerosol cans break down into poison gas and corrosive gas, at high temperatures. If aerosol mixtures are used near boilers, the aerosol will enter the boiler flame and will be heated. Continued use of aerosol cans near heating system boilers can result in severe boiler heating surface corrosion and possible danger to health.

The installer of this boiler is responsible for showing to the owner operator the location of all emergency shutoff devices, and instructing him in the use of each.

CONSUMER PROTECTION - WARRANTY

American-Standard products normally reach owners or consumer-users through an industry channel of distributors and plumbing and heating contractors. Experience has shown that claims of defects in our products generally relate to abuse or to other damage which occur after our sale and are not our responsibility. Since determining proper responsibility requires local inspection, our warranty (set forth below) extends only to our direct buyers; distributors are best equipped to obtain the facts underlying claims, to place responsibility where it belongs and to recommend/handle repair or replacement.

American-Standard warrants only to its distributors and other direct Buyers that it will furnish by freight a replacement for, or at its option repair, any product of its manufacture or part or portion thereof, proved to its satisfaction to be defective in material or workmanship under normal use and service within one year after installation.

THERE IS NO OTHER WARRANTY, EXPRESS OR IMPLIED, INCLUDING NO IMPLIED WARRANTY OF MERCHANTABILITY OR IMPLIED WARRANTY FOR FITNESS FOR A PARTICULAR PURPOSE AND AMERICAN-STANDARD WILL NOT BE RESPONSIBLE FOR ANY DAMAGES WHATSOEVER NOR FOR LABOR OR TRANSPORTATION EXPENSES RELATING TO SUCH REPLACEMENT OR SUCH REPAIR, NOR WILL IT BE HELD RESPONSIBLE FOR WARRANTY ADJUSTMENTS COSTING MORE THAN THE PRICE OF THE PRODUCT TO ITS DISTRIBUTORS AND OTHER DIRECT BUYERS.

Goods of other manufacturers sold by American-Standard are not warranted unless accompanied by an express written warranty, but the Seller will endeavor to secure for its direct Buyers the benefits of warranties extended by such other manufacturers for such goods.

American-Standard is proud of its record for product quality and for fairness in handling warranty matters; and, if an ultimate user of our products should feel our warranty system described above does not work fairly in his case, he should write the Office of the President, Director of Consumer Affairs, U. S. Plumbing/Heating, American-Standard, 40 West 40th Street, New York, N. Y. 10018.

DEALER'S NAME: _____

ADDRESS: _____

TELEPHONE NO.: _____

DATE OF INSTALLATION: _____

AMERICAN STANDARD

PLUMBING & HEATING

P. O. BOX 2003

NEW BRUNSWICK, N.J. 08903