PLAINTIFF'S EXHIBIT CEL-911m

HEAT EXCHANGER SPECIFICATION SHEET

Customer:	Pontiac Refining Corp.	Date:	3-15-68
Plant Location:	BTX Plant - Feed Preparation Section	Year Built:	1952
Manufacturer:	American Locomotive Co.	Installed:	1952
Service of Unit	Debutanizer Condenser	Serial No:	46899--6100
		Item No:	BTX-E-101 A, B
Size: 22-192	Type: CI 34-42H	Connected In:	Series
Sq. Ft. per Unit: 1740	Shells per Unit: 2	Sq.Ft./Shell:	870

PERFORMANCE OF ONE UNIT

	Shell Side	Tube Side
Fluid Circulated:	Hydrocarbons-Butanes	Circulating Water
Total Fluid Entering:	30,200 lb/hr.	161,000 lb/hr 322 gpm
Vapor	30,200 lb/hr.	
Liquid		161,000 lb/hr. 322 gpm
Steam		
Non Condensables		
Fluid Vaporized or Condensed:	Cond. 30,200 lb/hr.	
Steam Condensed:		
Gravity:	Liq. .5635 @ 125 °F	.995 @ 100 °F
Viscosity:	Liq. .019 cp. @125 °F	.800 cp @ 100 °F
Molecular Weight:	58	18
Specific Heat:	.[illegible]	1.00 BTU = °F
Latent Heat Vapors:	[illegible]	BTU =
Temperature In:	125 °F	90 °F
Temperature Out:	125 °F	100 °F
Operating Pressure:	70 #/Sq.In.	50 #/Sq.In.
Number of Passes:	-	2
Velocity:	Ft./Sec.	Ft./Sec.
Pressure Drop:	5 #/Sq.In.	[illegible] #/Sq.In.
Fouling:		
Heat Exchanged:- BTU/Hr.	4,020,000	M.T.D. Corr. 29.7 °F
Transfer Rate:- Service	77.6	Clean

CONSTRUCTION

150 PSIG

Design Pressure:	200 #/Sq.In.	150 #/Sq.In.
Test Pressure:	150 #/Sq.In.	225 #/Sq.In.
Design Temperature:	200 °F	150 °F
Tubes: Exh. Adm. 3-[illegible]	No. 276 OD 3/4" BWG 16 Length 20'0" Pitch 15/16 [illegible]	
Shell: A-285-C FB	ID 21-1/2" OD 21-7/8" Thickness 3/8"	
Shell Cover: A-285-C FB		Flgd. Head Cover A-285-C FB
Channel: A-285-C FB		Channel Cover A-285-C FB
Tube Sheets:- Stationary	Naval Brass Sp17	Floating Naval Brass S-[illegible]
Baffles:- Cross A-[illegible]	Type Segmental	Thickness 3/16
Baffle:- Long	Type	Thickness
Tube Supports: A-[illegible]		Thickness 1/2
Gaskets: Shell Metal Jacketed Asbestos 1/8"		Channel Asbestos 1/8 Inch.
Connections: Shell - In 8"-150 Out 6"-150		Service 150 lb. RF
Channel - In 8" Out 8"		Shell 150 lb. RF
Corrosion Allowance:- Shell Side 1/8"		Tube Side [illegible]
Code Requirements: API ASME 1951 and TEMA Stds.		
Weights:- Each Shell 9000 Lb.	Bundle 3500 Lb.	Full of Water 9500 Lb.

REMARKS:
Water side was originally 4 pass

CONFIDENTIAL PROPRIETARY

THE DATA ARE CONFIDENTIAL AND THE PROPERTY OF UNIVERSAL OIL PRODUCTS COMPANY AND SHALL NOT BE DISCLOSED TO OTHERS OR REPRODUCED IN ANY MANNER OR USED FOR ANY PURPOSE WHATSOEVER EXCEPT BY WRITTEN PERMISSION OR AS PROVIDED IN A SIGNED AGREEMENT WITH UNIVERSAL OIL PRODUCTS COMPANY RELATING TO SUCH DATA.

PROCESS DIVISION

30 ALGONQUIN ROAD • DES PLAINES, ILLINOIS 60016

PROJECT SPECIFICATION

REACTORS - EXISTING

NO. 9631 - 304 - 0

SHEET 3 OF 4

BY V.O. APP'D

DATE 7-13-71

ITEM Nº Px-R3

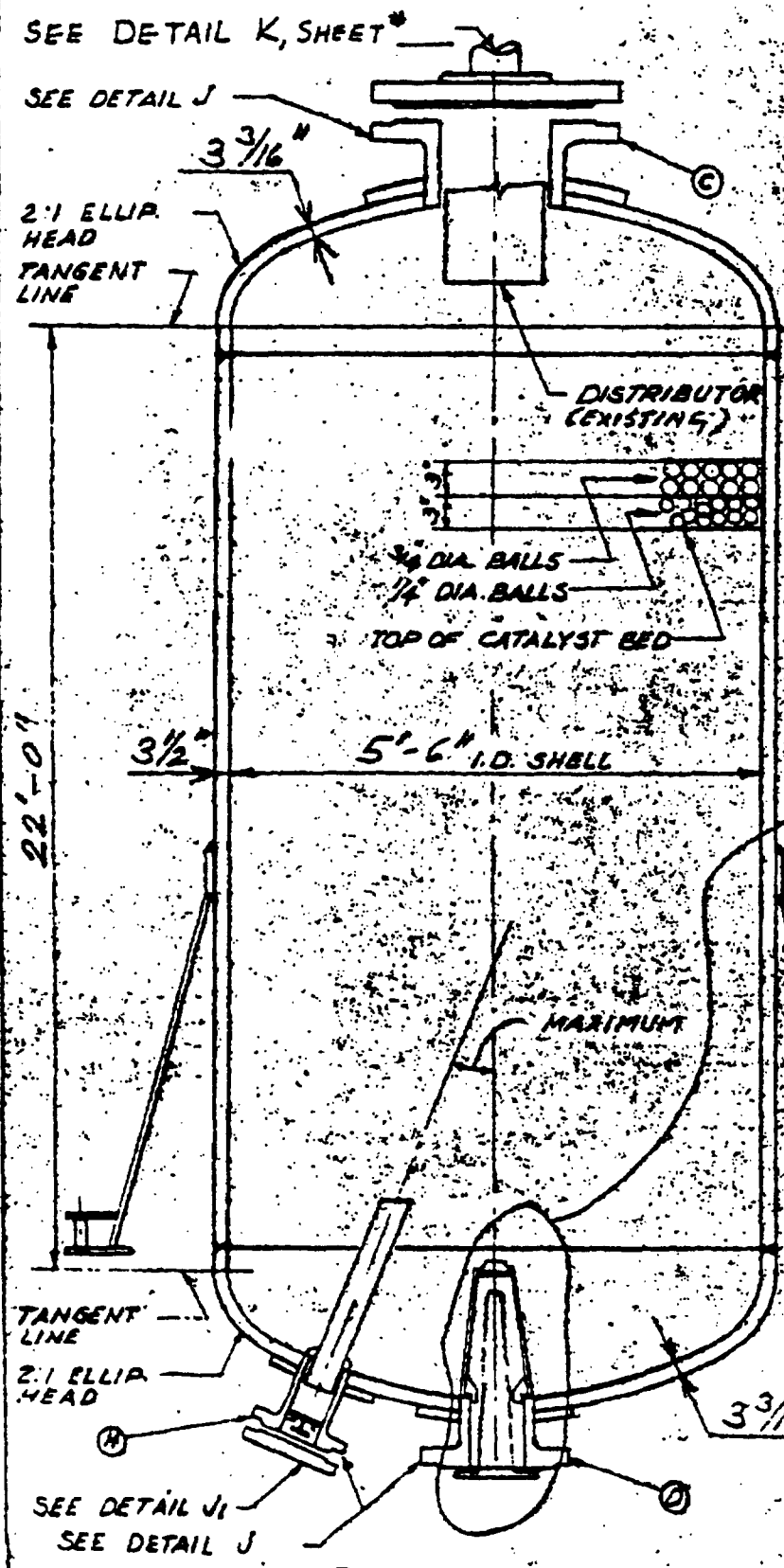

NOTES

ASME CODE:- API

U.O.P. FABRICATION SPECIFICATION 323.

*DESIGN PRESSURE 1110 P.S.I.

*DESIGN TEMPERATURE

SHELL: 650 °F

CORR. ALLOWANCE .143 SHEL
.656 HEAD

POSTWELD HEAT TREAT: ____

RADIOGRAPH: ____

JOINT EFFICIENCY: 95 %

HYDROSTATIC TEST: 2130 P.S.I.

MATERIAL: SHELL AND HEADS A-301-B - F.B.

ALL INTERNAL MATERIAL TO BE FABRICATED TO PASS THRU A 18" OPENING IN NOZZLE.

* RERATED FOR NEW DESIGN

© 18" WELDING NECK NOZZLE

Ⓓ 10" WELDING NECK NOZZLE

Ⓗ 4" WELDING NECK NOZZLE W/ BLIND FLANGE. ONE REQUIRED

→ FOR DETAIL SEE SHEET 4

MATERIAL OF ©ⒹⒽ - ASTM A182-F

RING JOINT FACING SHALL BE FLAT BOTTOM GROOVE TYPE.

ALL CONNECTIONS 900# ASA R.T.J.

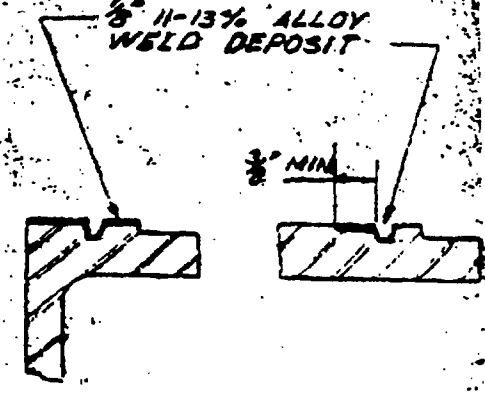

DETAIL J DETAIL J1

CONFIDENTIAL

P9A-2

SHELL DETAILS

UOP PROCESS DIVISION

30 ALGONQUIN ROAD • DES PLAINES, ILLINOIS 60016

NO. 9631- 304 REV. 0

SHEET 4 OF 4

BY V.O. APP'D

DATE 7-13-71

PROJECT SPECIFICATION

REACTORS Px-R1, Px-R2 & Px-R3

EXISTING INTERNALS EXCEPT INLET DISTRIBUTOR TO BE REMOVED.

NEW INTERNALS REQUIRED

L 3/16", PERFORATED PLATE (1/6" SLOTS X 1" LONG, 1/2" ON CENTE SEE DETAIL "K".

M SLEEVE 16 GA. PLATE. LOOSE F INTO CATALYST WITHDRAWAL NO PROVIDE 6 EQUALLY SPACED LU

N 8 X 8-1/2 MESH (.063" WIRE) SCREEN 0.048" X 0.042" OPENINGS. SEE NO

P 6 - EQUALLY SPACED CENTERIN

MATERIAL

ALL PLATE A-240-TYPE 316

ALL SCREEN A-240-TYPE 316

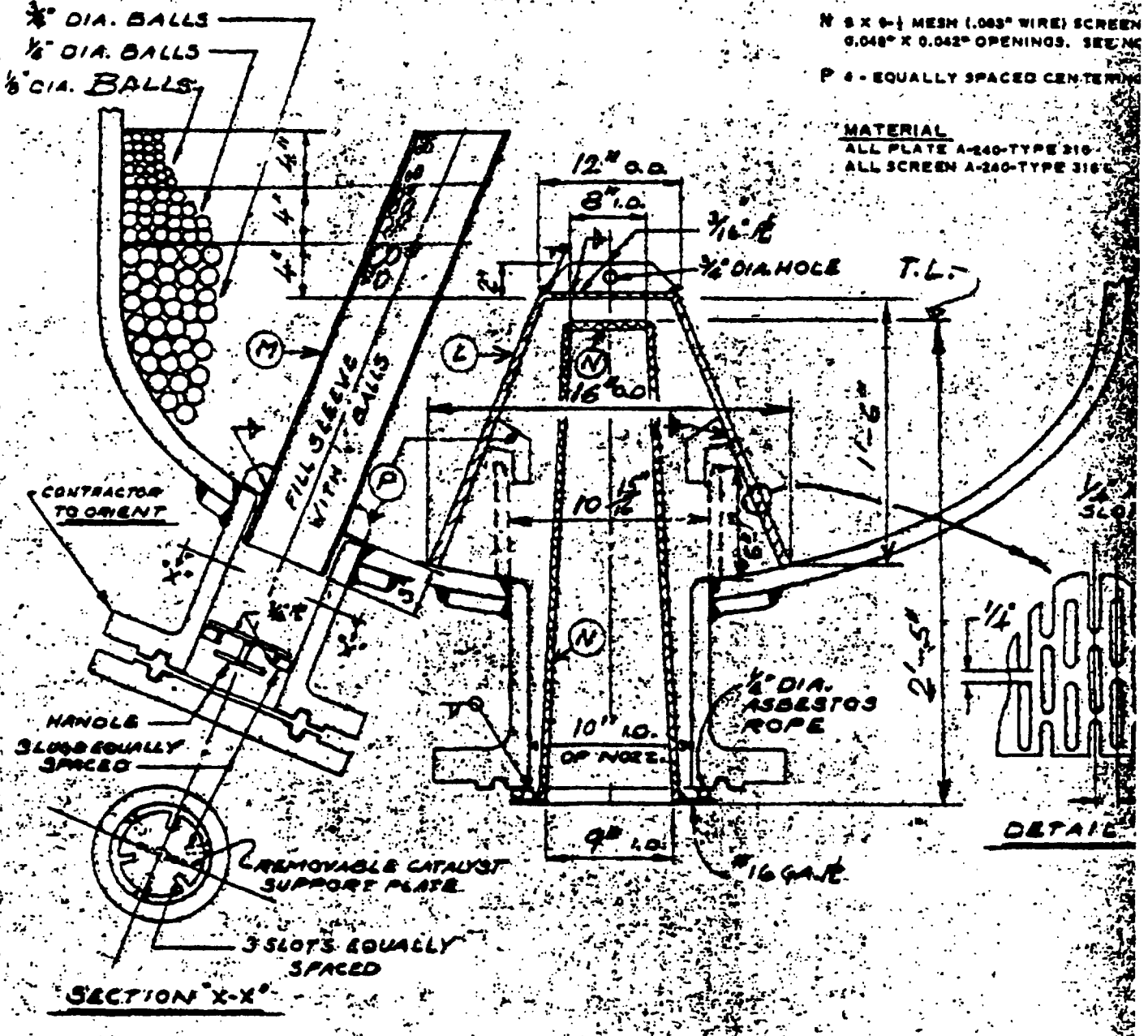

NOTE "R"

ALL WELDS ON OR TO SCREEN SHALL BE MADE BY THE SHIELDED INERT GAS PROCESS USING 1/16" TUNGSTEN ELECTRODE AND 1/16" BARE COMPATIBLE ROD.

VERTICAL SEAM OF SCREEN TO BE BUTT WELDED USING AN ASBESTOS BACKING UP STRIP.

NOTE: THESE DATA ARE CONFIDENTIAL AND THE PROPERTY OF UNIVERSAL OIL PRODUCTS COMPANY AND SHALL NOT BE DISCLOSED TO OTHERS OR REPRODUCED IN ANY MANNER OR USED FOR ANY PURPOSE WHATSOEVER EXCEPT BY WRITTEN PERMISSION OR AS PROVIDED IN A SIGNED AGREEMENT WITH UNIVERSAL OIL PRODUCTS COMPANY RELATING TO SUCH DATA.

"CONFIDENTIAL" PROPRIETARY

G 0001248

36	6	BAR 7/8 x 3" x 0-6" LG	COMM.	2
37	2	L 5" x 3½" x 5/16" x 35'0" LG.	A-7	60
		ROUGH WEIGHT	45,165#	
		FINISH WEIGHT	43,825#	

GENERAL NOTES

CONSTRUCTION: ALL WELDED, API-ASME CODE, 1951 EDITION, LATEST REVISION.
CODE STAMP U.S. REQUIRED TO BE STAMPED BY: THE J.B. BEAIRD COMPANY, INC.
TO BE INSPECTED FOR CODE APPROVAL BY: THE FIDELITY & CASUALTY CO OF N.Y.
DESIGN PRESSURE: 120 P.S.I. DESIGN TEMPERATURE: 100° F
MAXIMUM ALLOWABLE STRESS OF STEEL @ 100 °F. 18,750 P.S.I. HEADS
MAXIMUM ALLOWABLE WORKING PRESSURE 18,250 P.S.I. SHELL
(NEW, COLD, AND NO CORROSION ALLOWANCE) 120 P.S.I. LIMITED BY HEADS
MAXIMUM ALLOWABLE PRESSURE
(NEW @ 100 °F (NO CORROSION ALLOWANCE) 120 P.S.I. LIMITED BY HEADS
INITIAL HYDROSTATIC TEST PRESSURE 180 P.S.I.
HAMMER TEST PRESSURE 150 P.S.I.
FINAL HYDROSTATIC TEST PRESSURE 180 P.S.I.
TEST ALL PADS WITH AIR AND SOAP SUDS
ACTUAL CORROSION ALLOWANCE: SHELL NONE HEADS NONE
EFFICIENCY OF SHELL 90% EFFICIENCY OF HEADS 80%
FACTOR OF SAFETY 4 SEE NOTE "12"
RADIOGRAPHING NOT REQUIRED. STRESS RELIEVING NOT REQUIRED.
ALL MANWAYS AND NOZZLES TO BE PLUMB AND LEVEL. BOLT HOLES TO STRADDLE HORIZONTAL AND VERTICAL CENTER LINES OF VESSEL.

BEFORE SHIPMENT PROTECT ALL NOZZLE FACES AND THREADED OPENINGS. COAT ALL MACHINED SURFACES WITH RUST PREVENTING GREASE. COAT ALL STUDS WITH A MIXTURE OF KEROSENE AND GRAPHITE. DRY AND CLEAN INSIDE OF VESSEL THOROUGHLY.

TOLERANCES: [redacted] } SEE NOTE "6"
ANY SHOP MACHINED SURFACE ± 1/32" SCALE DO NOT SCALE

PAINT: ONE SHOP COAT GRAY PRIMER, COOK'S 504 A-30 (SYSTEM 32 / 33)

REFERENCE DRAWINGS:

PONTIAC REFINING CORP. DWG. DATED 8-1-55
T-205-206

THE J. B. BEAIRD COMPANY, INC.
SHREVEPORT, LOUISIANA

130" O.D. x 54'-7 3/8" SEAM TO SEAM BUTANE STORAGE TANK

FOR: PONTIAC REFINING CORP. CORPUS CHRISTI, TEXAS

DRAWN	8-25-55	T.L.W.	ORDER NO.
CHECKED	9-2-55	J.M.H.	55632
APPROVED			SHEET 1 OF 4

FF 0092993

MATERIAL LISTED IS FOR ONE VESSEL
4 VESSELS REQUIRED

CUST. ORDER NO.
CUST. JOB NO.
ITEM NO.

ITEM NO.	NO. REQ'D	DESCRIPTION	MATERIAL	W
1	2	R .26" x 81" x 401 1/2"	A-299-MOD.	47
2	7	R 1/2" x 94 5/8" x 407 7/8"	A-299-MOD.	38
3	1	BAR 3/8" x 1 1/4" x 34'-0"	COMM.	
4	1	20" x 150# ASA FS SLIP ON FLG W/1/16" R.F.	A-181-1	1
		STD. DRILL & FINISH		
5	1	20" O.D. x 1/2" WALL SMLSS PIPE x 0'-10 1/16" LG.	A-53-A	8
6	1	80" x 150# ASA FS BLIND FLG W/1/16" R.F. STD.	A-181-1	2
		DRILL & FINISH		
7	20	1 1/8" DIA. x 6 1/4" LG. ALLOY STEEL STUDS (TFL)	A-193 "B-7"	
		& STAMPED "B-7" W/2 DH. QUENCHED HEX	A-194 "2-H"	
		NUTS EA. STAMPED "2H"		
8	1	1/16" THK. x 20" I.D. x 23 3/8" O.D. ASBESTOS	J.M. "GA"	
		SHEET GASKET.		
9	1	R 3/8" x 20 3/8" I.D. x 36" O.D.	A-299-MOD.	7
10	1	8" x 150# ASA FS SLIP ON FLG W/1/16" R.F. STD.	A-181-1	2
		DRILL & FINISH		
11	1	8" SCH. 80 SMLSS PIPE x 0'-9 3/8" LG.	A-53-A	3
12	1	R 3/8" x 9" I.D. x 14" O.D.	A-299-MOD.	1
13	1	4" x 150# ASA FS SLIP ON FLG W/1/16" R.F. STD.	A-181-1	1
		DRILL & FINISH		
14	1	4" SCH. 80 SMLSS PIPE x 0'-8 3/16" LG.	A-53-A	
15	1	R 7/16" x 4 7/8" I.D. x 9 1/8" O.D.	A-299-MOD.	
16	2	3" x 300# ASA FS SLIP ON FLG W/1/16" R.F.	A-181-1	2
		STD. DRILL & FINISH		
17	2	3" SCH. 80 SMLSS PIPE x 0'-9 7/16" LG.	A-53-A	1
18	2	R 3/8" x 3 7/8" I.D. x 8 7/8" O.D.	A-299-MOD.	1
19	2	1 1/4" x 150# ASA FS SLIP ON FLG W/1/16" R.F.	A-181-1	
		STD. DRILL & FINISH		
20	2	1 1/4" SCH. 80 SMLSS PIPE x 0'-9 5/8" LG.	A-53-A	
21	1	1 1/2" x 150# ASA FS SLIP ON FLG W/1/16" R.F.	A-181-1	
		STD. DRILL & FINISH		
22	1	1 1/2" SCH. 80 SMLSS PIPE x 0'-9 3/8" LG.	A-53-A	
23	1	1" x 6000# COUPLING.	F.S.	
24	1	3/4" x 6000# COUPLING	F.S.	
25	1	BAR 1 3/4" DIA. x 4 13/16" LG. (TO MAKE 3/4" x 6000#	H.R.S.	
		SPECIAL COUPLINGS		

36	2	BAR 7/8" x 3" x 0'-6" LG	COMM.	2
37	2	L 5" x 3" x 5/16" x 35'0" LG.	A-7	60
		ROUGH WEIGHT	45,165#	
		FINISH WEIGHT	43,825#	

GENERAL NOTES

CONSTRUCTION: ALL WELDED, API-ASME CODE, 1951 EDITION, LATEST REVISION.
CODE STAMP U5 REQUIRED TO BE STAMPED BY: THE J.B. BEAIRD COMPANY, INC
TO BE INSPECTED FOR CODE APPROVAL BY: THE FIDELITY & CASUALTY CO OF N.Y.
DESIGN PRESSURE: 120 P.S.I. DESIGN TEMPERATURE: 100° F.
MAXIMUM ALLOWABLE STRESS OF STEEL @ 100 °F. 18,750 P.S.I. HEADS
MAXIMUM ALLOWABLE WORKING PRESSURE 18,250 P.S.I. SHELL
(NEW, COLD, AND NO CORROSION ALLOWANCE) 120 P.S.I. LIMITED BY HEADS
MAXIMUM ALLOWABLE PRESSURE
(NEW @ 100 °F (NO CORROSION ALLOWANCE) 120 P.S.I. LIMITED BY HEADS
INITIAL HYDROSTATIC TEST PRESSURE 180 P.S.I.
HAMMER TEST PRESSURE 150 P.S.I.
FINAL HYDROSTATIC TEST PRESSURE 180 P.S.I.
TEST ALL PADS WITH AIR AND SOAP SUDS
ACTUAL CORROSION ALLOWANCE: SHELL NONE HEADS NONE
EFFICIENCY OF SHELL 90% EFFICIENCY OF HEADS 80%
FACTOR OF SAFETY 4 SEE NOTE "12"
RADIOGRAPHING [redacted] REQUIRED. STRESS RELIEVING NOT REQUIRED.
ALL MANWAYS AND NOZZLES TO BE PLUMB AND LEVEL. BOLT HOLES TO STRADDLE HORIZONTAL AND VERTICAL CENTER LINES OF VESSEL.
BEFORE SHIPMENT PROTECT ALL NOZZLE FACES AND THREADED OPENINGS. COAT ALL MACHINED SURFACES WITH RUST PREVENTING GREASE. COAT ALL STUDS WITH A MIXTURE OF KEROSENE AND GRAPHITE. DRY AND CLEAN INSIDE OF VESSEL THOROUGHLY.
TOLERANCES: [redacted] } SEE NOTE "6"
ANY SHOP MACHINED SURFACE ± 1/32" SCALE DO NOT SCALE
PAINT: ONE SHOP COAT GRAY PRIMER, COOK'S 504-A-30 (ITEM 38 & 33)

REFERENCE DRAWINGS:

PONTIAC REFINING CORP DWG DATED 8-1-55
T-205-206

THE J. B. BEAIRD COMPANY, INC.
SHREVEPORT, LOUISIANA

130" O.D. x 54'-7 3/8" SEAM TO SEAM BUTANE STORAGE TANK

FOR: PONTIAC REFINING CORP. CORPUS CHRISTI, TEXAS

DRAWN	8-25-55	F.W.	ORDER NO.	
CHECKED	9-2-55	J.M.H.	5563 2	SHEET 1 OF 4
APPROVED				

FF 0092956

MATERIAL LISTED IS FOR ONE VESSEL
4 VESSELS REQUIRED

CUST. ORDER NO.
CUST. JOB NO.
ITEM NO.

ITEM NO.	NO. REQ'D	DESCRIPTION	MATERIAL	W
1	2	R .26" x 81" x 401 1/2"	A-299-MOD.	47
2	7	R 1/2" x 94 5/8" x 407 7/8"	A-299-MOD.	38
3	1	BAR 3/8" x 1 1/4" x 34'-0"	COMM.	
4	1	20" x 150# ASA FS SLIP ON FLG W/1/16" R.F.	A-181-1	1
		STD. DRILL & FINISH		
5	1	20" O.D. x 1/2" WALL SMLSS PIPE x 0'-10 7/16" LG.	A-53-A	
6	1	80" x 150# ASA FS BLIND FLG. W/1/16" R.F. STD.	A-181-1	2
		DRILL & FINISH		
7	20	1 1/8" DIA. x 6 1/4" LG. ALLOY STEEL STUDS (T.F.L.)	A-193 "B-7"	
		& STAMPED "B-7" W/2 ON QUENCHED HEX	A-194 "2-H"	
		NUTS EA. STAMPED "2 H"		
8	1	1/16" THK. x 20" I.D. x 23 7/8" O.D. ASBESTOS	J.M. "60"	
		SHEET GASKET		
9	1	R 3/8" x 20 3/8" I.D. x 36" O.D.	A-299-MOD.	7
10	1	8" x 150# ASA FS SLIP ON FLG W/1/16" R.F. STD.	A-181-1	2
		DRILL & FINISH		
11	1	8" SCH. 80 SMLSS PIPE x 0'-9 3/8" LG.	A-53-A	
12	1	R 3/8" x 9" I.D. x 14" O.D.	A-299-MOD.	
13	1	4" x 150# ASA FS SLIP ON FLG W/1/16" R.F. STD.	A-181-1	1
		DRILL & FINISH		
14	1	4" SCH. 80 SMLSS PIPE x 0'-8 3/16" LG.	A-53-A	
15	1	R 7/16" x 4 7/8" I.D. x 9 1/8" O.D.	A-299-MOD.	
16	2	3" x 300# ASA FS SLIP ON FLG W/1/16" R.F.	A-181-1	2
		STD. DRILL & FINISH		
17	2	3" SCH. 80 SMLSS PIPE x 0'-9 7/16" LG.	A-53-A	
18	2	R 3/8" x 3 7/8" I.D. x 8 7/8" O.D.	A-299-MOD.	1
19	2	1 1/4" x 150# ASA FS SLIP ON FLG W/1/16" R.F.	A-181-1	
		STD. DRILL & FINISH		
20	2	1 1/4" SCH. 80 SMLSS PIPE x 0'-9 5/8" LG.	A-53-A	
21	1	1 1/2" x 150# ASA FS SLIP ON FLG W/1/16" R.F.	A-181-1	
		STD. DRILL & FINISH		
22	1	1 1/2" SCH. 80 SMLSS PIPE x 0'-9 3/8" LG.	A-53-A	
23	1	1" x 6000# COUPLING	F.S.	
24	1	3/4" x 6000# COUPLING	F.S.	
25	1	BAR 1 3/4" DIA. x 4 13/16" LG. (TO MAKE 3/4" x 6000#	H.R.S.	
		SPECIAL COUPLING)		

FF 0092957

36	2	BAR 3/8" x 3" x 0'-6" LG	COMM	E
37	2	L 5" x 3 1/2" x [redacted]6" x 35'-0" LG.	A-7	609
		ROUGH WEIGHT	45,165#	
		FINISH WEIGHT	43,825#	

GENERAL NOTES

CONSTRUCTION: ALL WELDED, API-ASME CODE, 1951 EDITION, LATEST REVISION.
CODE STAMP T5 REQUIRED TO BE STAMPED BY: THE J.B. BEAIRD COMPANY, INC.
TO BE INSPECTED FOR CODE APPROVAL BY: THE FIDELITY & CASUALTY CO OF N.Y.
DESIGN PRESSURE: 120 P.S.I. DESIGN TEMPERATURE: 100° F.
MAXIMUM ALLOWABLE STRESS OF STEEL @ 100 °F. 18,750 P.S.I. HEADS
MAXIMUM ALLOWABLE WORKING PRESSURE 18,250 P.S.I. SHELL
(NEW, COLD, AND NO CORROSION ALLOWANCE) 120 P.S.I. LIMITED BY HEADS
MAXIMUM ALLOWABLE PRESSURE
(NEW @ 100 °F (NO CORROSION ALLOWANCE) 120 P.S.I. LIMITED BY HEADS
INITIAL HYDROSTATIC TEST PRESSURE 180 P.S.I.
HAMMER TEST PRESSURE 150 P.S.I.
FINAL HYDROSTATIC TEST PRESSURE 180 P.S.I.
TEST ALL PADS WITH AIR AND SOAP SUDS
ACTUAL CORROSION ALLOWANCE: SHELL NONE HEADS NONE
EFFICIENCY OF SHELL 90% EFFICIENCY OF HEADS 80%
FACTOR OF SAFETY 4 SEE NOTE "12
RADIOGRAPHING [redacted] REQUIRED. STRESS RELIEVING NOT REQUIRED.
ALL MANWAYS AND NOZZLES TO BE PLUMB AND LEVEL. BOLT HOLES TO STRADDLE HORIZONTAL AND VERTICAL CENTER LINES OF VESSEL.
BEFORE SHIPMENT PROTECT ALL NOZZLE FACES AND THREADED OPENINGS. COAT ALL MACHINED SURFACES WITH RUST PREVENTING GREASE. COAT ALL STUDS WITH A MIXTURE OF KEROSENE AND GRAPHITE. DRY AND CLEAN INSIDE OF VESSEL THOROUGHLY.
TOLERANCES: [redacted] SEE NOTE "6
ANY SHOP MACHINED SURFACE ± 1/32" SCALE DO NOT SCALE
PAINT ONE SHOP COAT GRAY PRIMER, COOK'S 504-A-30 (ITEM "38 / 33)

REFERENCE DRAWINGS:

PONTIAC REFINING CORP DWG DATED 8-1-55
T-205-208

THE J. B. BEAIRD COMPANY, INC.
SHREVEPORT, LOUISIANA

130" O.D. x 54'-7 3/8" SEAM TO SEAM BUTANE STORAGE TANK

FOR: PONTIAC REFINING CORP. CORPUS CHRISTI, TEXAS

DRAWN	8-25-55	T.W.	ORDER NO.	SHEET 1 OF 4
CHECKED	9-2-55	J.M.H.	5563 2	
APPROVED				

FF 0092916

MATERIAL LISTED IS FOR ONE VESSEL
4 VESSELS REQUIRED

CUST. ORDER NO.
CUST. JOB NO.
ITEM NO.

ITEM NO.	NO. REQ'D	DESCRIPTION	MATERIAL	W
1	2	R .26" x 81" x 401 1/2"	A-299-MOD	47
2	7	R 1/2" x 94 5/8" x 407 7/8"	A-299-MOD.	38
3	1	BAR 3/8" x 7 1/4" x 34'-0"	COMM.	
4	1	20" x 150# ASA FS SLIP ON FLG W/ 1/16" R.F.	A-181-1	1
		STD. DRILL & FINISH		
5	1	20" O.D. x 1/2" WALL SMLSS PIPE x 0'-10 1/16" LG.	A-53-A	2
6	1	20" x 150# ASA FS BLIND FLG W/ 1/16" R.F. STD.	A-181-1	2
		DRILL & FINISH		
7	20	1 1/8" DIA. x 6 1/4" LG. ALLOY STEEL STUDS (T.F.L.)	A-193 B-7	
		& STAMPED "B-7" W/ 2 ON QUENCHED HE	A-194 2-H	
		NUTS EA. STAMPED "2H"		
8	1	1/16" THK. x 20" I.D. x 23 7/8" O.D. ASBESTOS	J.M. "GA"	
		SHEET GASKET.		
9	1	R 3/8" x 20 9/8" I.D. x 36" O.D.	A-299-MOD.	7
10	1	8" x 150# ASA FS SLIP ON FLG W/ 1/16" R.F. STD.	A-181-1	2
		DRILL & FINISH		
11	1	8" SCH. 80 SMLSS PIPE x 0'-9 3/8" LG.	A-53-A	3
12	1	R 3/8" x 9" I.D. x 14" O.D.	A-299-MOD.	1
13	1	4" x 150# ASA FS SLIP ON FLG W/ 1/16" R.F. STD.	A-181-1	1
		DRILL & FINISH		
14	1	4" SCH. 80 SMLSS PIPE x 0'-8 9/16" LG.	A-53-A	2
15	1	R 7/16" x 4 7/8" I.D. x 9 7/8" O.D.	A-299-MOD.	
16	2	3" x 300# ASA FS SLIP ON FLG W/ 1/16" R.F.	A-181-1	2
		STD DRILL & FINISH		
17	2	3" SCH. 80 SMLSS PIPE x 0'-9 7/16" LG.	A-53-A	1
18	2	R 3/8" x 3 7/8" I.D. x 8 7/8" O.D.	A-299-MOD.	1
19	2	1 1/4" x 150# ASA FS SLIP ON FLG W/ 1/16" R.F.	A-181-1	
		STD. DRILL & FINISH		
20	2	1 1/4" SCH. 80 SMLSS PIPE x 0'-9 5/8" LG.	A-53-A	
21	1	1 1/2" x 150# ASA FS SLIP ON FLG W/ 1/16" R.F.	A-181-1	
		STD. DRILL & FINISH		
22	1	1 1/2" SCH. 80 SMLSS PIPE x 0'-9 3/8" LG.	A-53-A	
23	1	1" x 6000# COUPLING.	F.S.	
24	1	3/4" x 6000# COUPLING	F.S.	
25	1	BAR 1 3/4" DIA. x 4 13/16" LG. (TO MAKE 3/4" x 6000#	H.R.S.	
		SPECIAL COUPLING.		

FF 0092017

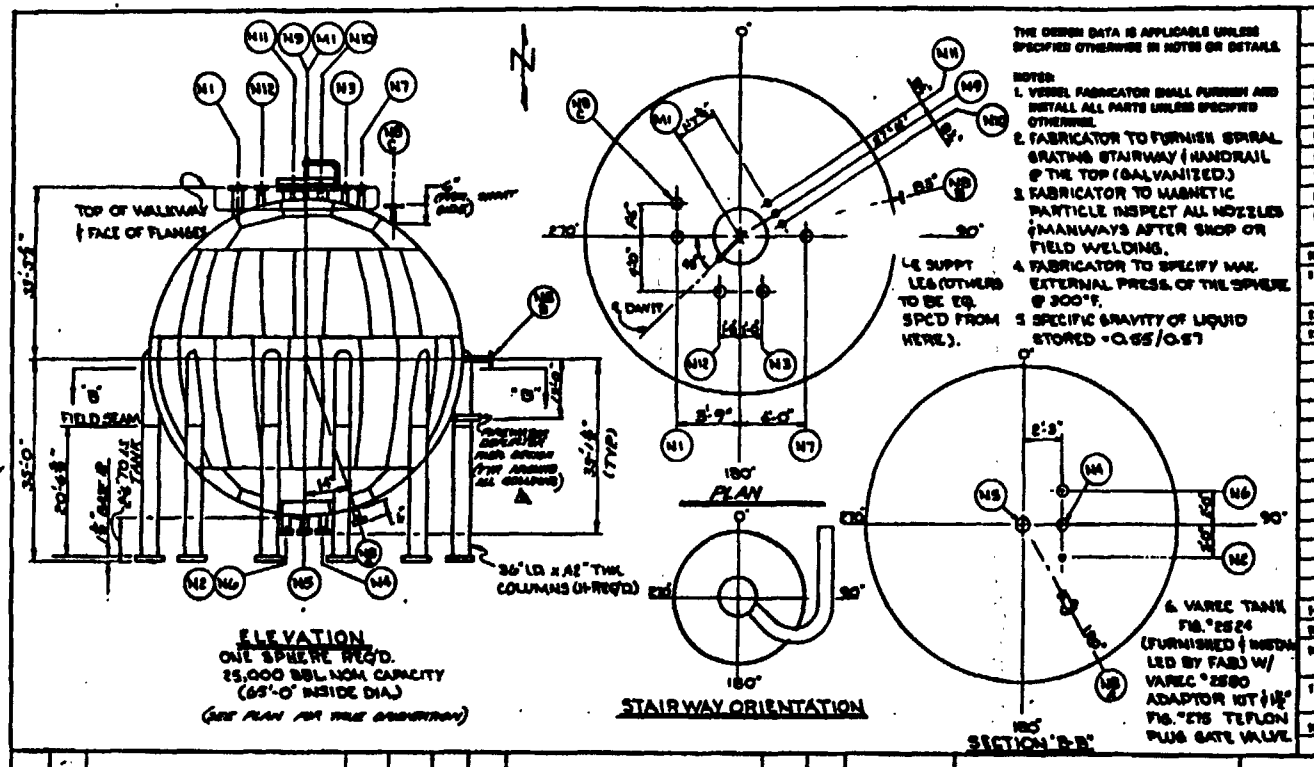

THE DESIGN DATA IS APPLICABLE UNLESS SPECIFIED OTHERWISE IN NOTES OR DETAILS.

NOTES:
1. VESSEL FABRICATOR SHALL FURNISH AND INSTALL ALL PARTS UNLESS SPECIFIED OTHERWISE.
2. FABRICATOR TO FURNISH SPIRAL GRATING STAIRWAY & HANDRAIL @ THE TOP (GALVANIZED.)
3. FABRICATOR TO MAGNETIC PARTICLE INSPECT ALL NOZZLES & MANWAYS AFTER SHOP OR FIELD WELDING.
4. FABRICATOR TO SPECIFY MAX. EXTERNAL PRESS. OF THE SPHERE @ 300°F.
5. SPECIFIC GRAVITY OF LIQUID STORED = 0.55/0.57

DESIGN DATA

1. DESIGN BASIS: SP— & ASME VIII
2. STAMPING REQUIREMENTS: YES
3. SPECS: SP 42.1, 42.2, 42.2A, 42.2B & 42.7
4. DESIGN PRESSURE: 100 PSIG, TEMP. 132
5. OPER. PRESSURE: 40 PSIG, TEMP. 80
6. POSTWELD HEAT TREATMENT @ PER CODE °F
7. WELD EXAMINATION: 100 %
8. JOINT EFFICIENCY: SHELL 100% HEADS
9. NOMINAL CORROSION ALLOWANCE: SHELL 1/16" HEADS NOZZLE NECKS 1/16"
10. M.A.W.P. @ DESIGN TEMP. PER CODE
11. BASIS FOR CALCULATED TEST PRESS. SHOP/FIELD TEST LIMITED BY: PER CODE
12. HYDRO-TEST PRESS. SHOP — PSIG FIELD PER CODE
13. MATERIAL SPECIFICATIONS:
    (a) SHELL SA-516-70
    (b) HEADS
    (c) MIXING/BLADDING
    (d) NOZZLE NECKS & PIPE SA-106-B
    (e) FLANGES (EXTERNAL) SA-105
    (f) COUPLINGS (SCREWED/[illegible]) SA-181-1
    (g) GASKETS 1/16" THK. ASBESTOS - JM #60 OR EQ
    (h) BOLTING (EXTERNAL) SA-193-B7 / SA-194-2H
    (i) INTERNALS C.S.
    (j) SUPPORTS C.S.
    (k) EXTERNAL APPURTENANCES C.S.
14. M.H./H.H. FURNISH W/ [illegible] COVER, STUDS & GASKET
15. PAINT FOR SP— 647820-00.3 (BY FABR.)
16. INSULATION (BY OTHERS) HOT/COLD NONE — NO. OF LAYERS — TOTAL T
17. FIREPROOFING (BY OTHERS) [illegible] LEGS — THK. — MATL. — SQ. FT. — C
18. INSPECTION BY — CLIENT/F

REV.	DATE	REVISION DESCRIPTION	DRAWN / CHECK	APP.
3	3/3/78	SEE DWG. REV. REC. SHT.	JM	
2	11/21/77	SEE DWG. REV. REC. SHT.	JM	
1	10/18/77	SEE DWG. REV. REC. SHT.	JM	

DRAWING NO.	REFERENCE DRAWING - CONTRACT NO. 647820
00-2-4001	MANWAY DAVIT DETAILS

FLUOR

DRAWN BY: JJM
CHECKED BY: AW 10/14/76
SUPERVISOR: M. [illegible]
RELEASE DATE
SUPERVISING ENGR.: J.S. [illegible]
DIVISION: JBL
PROJECT ENGR.
APP. DATE
CLIENT
APP. DATE

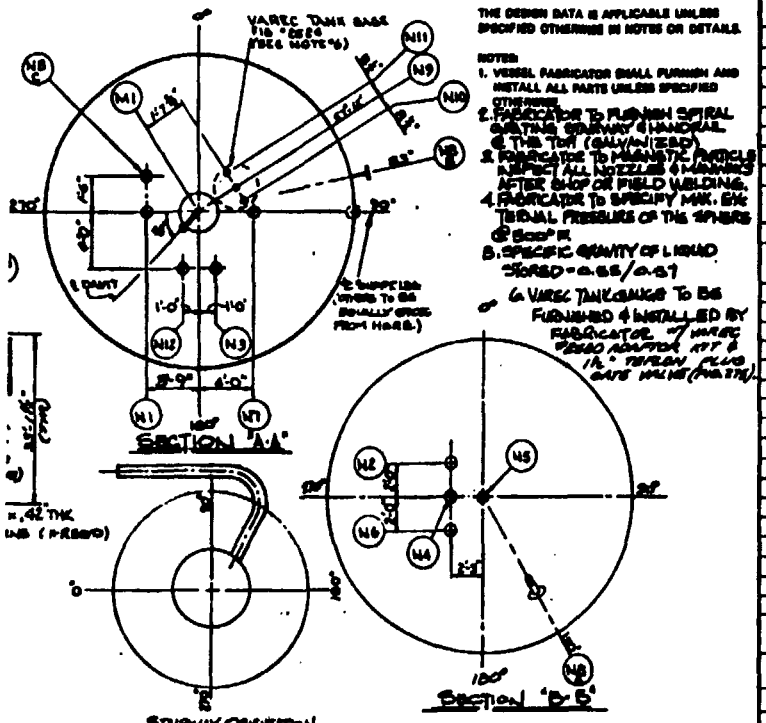

THE DESIGN DATA IS APPLICABLE UNLESS SPECIFIED OTHERWISE IN NOTES OR DETAILS

NOTES:

1. VESSEL FABRICATOR SHALL FURNISH AND INSTALL ALL PARTS UNLESS SPECIFIED OTHERWISE.
2. FABRICATOR TO FURNISH SPIRAL GUIDING STAIRWAY & HANDRAIL @ THE TOP (GALVANIZED)
3. FABRICATOR TO MAGNETIC PARTICLE INSPECT ALL NOZZLES & MANWAYS AFTER SHOP OR FIELD WELDING.
4. FABRICATOR TO SPECIFY MAX. ENG. TESTING PRESSURE OF THE SPHERE @ 500°F.
5. SPECIFIC GRAVITY OF LIQUID STORED = 0.55/0.57
6. VAREC TANK GAGE TO BE FURNISHED & INSTALLED BY FABRICATOR. 4" MAGNETIC GUIDED ADAPTER WITH 8" 150# RF FLANGE & 1/2" TEFLON FLUID GAGE VALVE (MAX. STD.)

DESIGN DATA

1. DESIGN BASIS: SP–	& ASME VIII DIV.
2. STAMPING REQUIREMENTS: Yes	
3. SPECS: GR 42.1, 42.2, 24, 25, 42.7	
4. DESIGN PRESSURE: 100 PSIG, TEMP. 150 °F	
5. OPER. PRESSURE: 40 PSIG, TEMP. 80 °F	
6. POSTWELD HEAT TREATMENT OF: Per Code SHELL	HEADS
7. WELD EXAMINATION: 100% Per Code	
8. JOINT EFFICIENCY: SHELL 100% % HEADS — %	
9. NOMINAL CORROSION ALLOWANCE: SHELL 1/16" HEAD NOZZLE NECK 1/16"	
10. M.A.W.P. & DESIGN TEMP. Per Code PSIG	
11. BASIS FOR CALCULATED TEST PRESS. Per Code PSIG	
SHOP/FIELD TEST LIMITED BY:	
12. HYDRO-TEST PRESS. SHOP PSIG FIELD Per Code PSIG	
13. MATERIAL SPECIFICATIONS:	
a) SHELL SA-516-70	
b) HEADS	
c) [illegible]	
d) NOZZLE NECKS & PIPE SA-106-B	
e) FLANGES (EXTERNAL) SA-105 Per Code	
f) COUPLINGS (SCREWED/SOCKET WELDED) SA-181-1	
g) GASKETS 1/8" THK. NOMEX - JM #60 or EQUAL	
h) BOLTING (EXTERNAL) SA-193-B7/SA-194-2H	
i) INTERNALS C.S.	
j) SUPPORTS C.S.	
k) EXTERNAL APPURTENANCES C.S.	
14. M.H. PER SPEC. FURNISH W/ COVER, STUDS & GASKET	
15. PAINT PER SP– 647820-88-5 (BY OWNER)	

16. INSULATION (BY OTHERS) HOT/COLD None	NO. OF LAYERS	TOTAL THK.

17. FIREPROOFING (BY OTHERS) LBS/FT²	THK.	MATL.	SQ. FT.	CU. FT.

18. INSPECTION BY CLIENT/FLUOR

CONNECTION SCHEDULE

MARK	NO. REQD.	SIZE	RATING	FACING	DESCRIPTION
N-1	1	6"	150	RF	PBW
N-2	1	8"	"	"	BYPASS / PUMP RELIEF
N-3	1	4"	"	"	VENT
N-4	1	6"	"	"	FILL
N-5	1	8"	"	"	DRAW
N-6	1	10"	"	"	PUMP SUCTION
N-7	1	1½"	"	"	PI.
N-8	3	1½"	"	"	T.W.T.I.
N-9	1	1½"	"	"	L.T. L.I.
N-10	1	1½"	"	"	L.T.L.I.
N-11	1	1½"	"	"	L.T.L.I.
N-12	1	8"	150	RF	VAPOR
M-1	1	20"	150	RF	MANWAY

NOZZLE PROJECTIONS ARE FROM ℄ OF VESSEL TO EXTREME FACE OF FLANGE EXCEPT AS NOTED:

FOR & SMALLER
FOR TO INCLUSIVE
FOR & LARGER

ESTIMATED VESSEL WEIGHTS

FABRICATED BY FABRICATOR LB.
EMPTY (LESS OPER. LIQUID) LB.
OPERATING LB.
FULL OF WATER LB.
LB.

PROCESS ENGR. APP. P.J. Lemmon DATE 9/8/1975
INSTRUMENT ENGR. APP. [illegible] DATE 9/8/75
INSTRUMENT APPROVAL CONSISTS OF CHECKING SIZE & ELEV. OF INSTRUMENT CONNECTIONS.
PURCHASE ORDER NO. 647820-4-0107
FABRICATOR C.B.I.

REVISION DESCRIPTION	CHECK	APP.	DRAWING NO.	REFERENCE DRAWING – CONTRACT NO. 647820
DWG. APPR. REC. SHT.	JM	JM		
DWG. REV. REC. SHT.	JM	JM		
DWG. REV. REC. SHT.				
DWG. REV. REC. SHT.				
DWG. APPR. SHT. 1 of 1	JM	JM	00-2-4001	MANWAY DAN'T DETAILS

FLUOR

DRAWING BY M. Hoffman 9/5/75
CHECKED BY [illegible] 9/5/75
PROJECT ENGR. J.S. Lewis
PROJECT ENGR. G. Mosier 9/9/75

100-BUTANE/N-BUTANE STORAGE 88-TK-2
NEW LIGHT-ENDS STORAGE FACILITIES
HIGH SULFUR CRUDE FACILITIES
CHAMPLIN PETROLEUM CO. CORPUS CHRISTI, TEX.

SCALE NONE
DRAWING NUMBER 647820-88-2-402
REVISION 5

TANK 172

ALL RIB RADII ARE $\frac{1}{4}$"

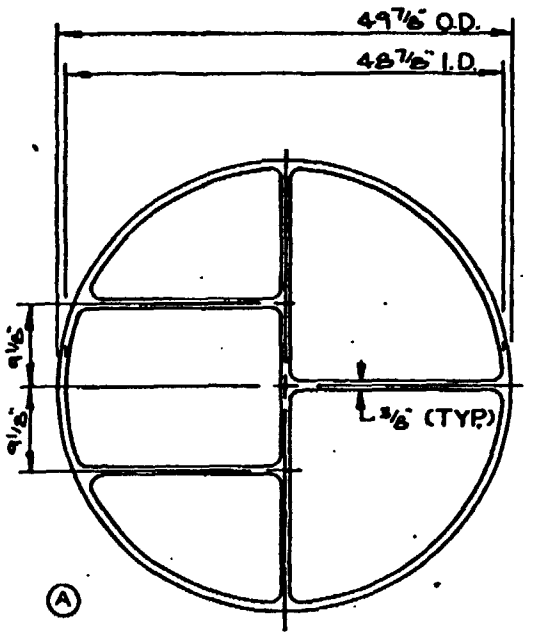

CHANNEL COVER GASKET

ONE REQ'D.

$\frac{1}{8}$" THK. ARMCO IRON JACKETED ASBESTOS FILLED

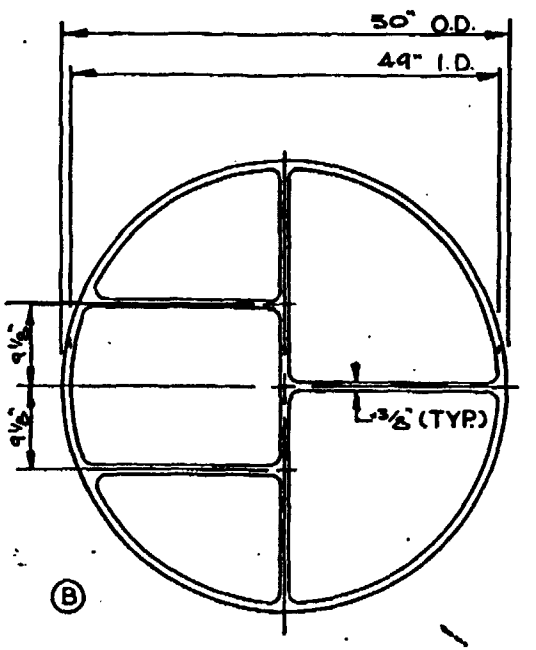

CHANNEL GASKET-SHELL END

ONE REQ'D.

$\frac{1}{8}$" THK. ARMCO IRON JACKETED ASBESTOS FILLED

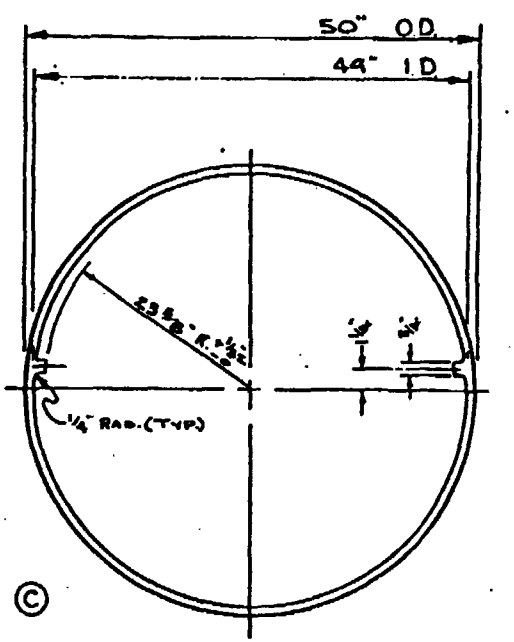

SHELL GASKET

ONE REQ'D.

$\frac{1}{8}$" THK. ARMCO IRON JACKETED ASBESTOS FILLED

REQ'D. AS NOTED FOR ONE SET

83-E-33

	W-722-2 ONE SET	WESTERN SUPPLY COMPANY TULSA OKLAHOMA GASKET DETAILS J.E. 2-17-75 47" x 16' NONE AFU DWG NO W-722-2-JC

Inspection history in abbreviated form for 83-E-33, Depropanizer Overhead Condenser, Manufactured by Western Supply Company in 1974. FORMERLY 37-E-16.

SIZE: 47" x 16' TYPE: U-tube (AFU)

INSTALLED IN JULY, 1975 AS 37-E-16. AE-16A & B WERE REMOVED AND THIS SINGLE UNIT WAS INSTALLED IN THEIR PLACE AND NUMBERED A-E-16. UNIT WAS REMOVED FROM 37 AREA IN AUGUST, 1984 AND PLACED IN 83 AREA -- NUMBER ASSIGNED 83-E-33.

CONSTRUCTION

	Shell side	Tube side
Design Pressure	310 psi	75 psi
Test Pressure	465 psi	115 psi
Design Temperature	[illegible] F	150 deg. F
Corrosion Allowance		[illegible]

Tubes: Wld. A-214
BWG .125" Lengt
Shell: Steel I.D.
Shell Cover: Steel
Channel: Steel
Channel Cover: Ste
Stationary Tubesheets: Steel
Gaskets: Metal Jacketed Asbestos

NO U.T. NEED S/O

4/76 Channel cover was removed for cleaning of water side.

6/76 Tube side was water blasted. Moderate fouling. Ultrasonic thickness measurements indicate shell side is in good condition. SEE FILE for thickness measurements.

8/84 Vessel re-located to new alky unit. New number was assigned.

10/85 Turnaround. The bundle was not pulled during this time. The condenser was hydroblasted in place. Internally, the tubes looked OK. Two tubes had previously been plugged. The tubesheet had moderate corrosion. The channel was in satisfactory condition. It hydrotested OK at 450 psig on the shell side. SEE FILE for thickness measurements.

3/86 Turnaround. Exchanger was not inspected.

4/87 Turnaround. Only the channel cover was pulled. No repairs were required. After cleaning, inspection of tube I.D.'s revealed general corrosion. Tube ends and tubesheet showed shallow corrosion. Channel head had shallow general corrosion with light shallow

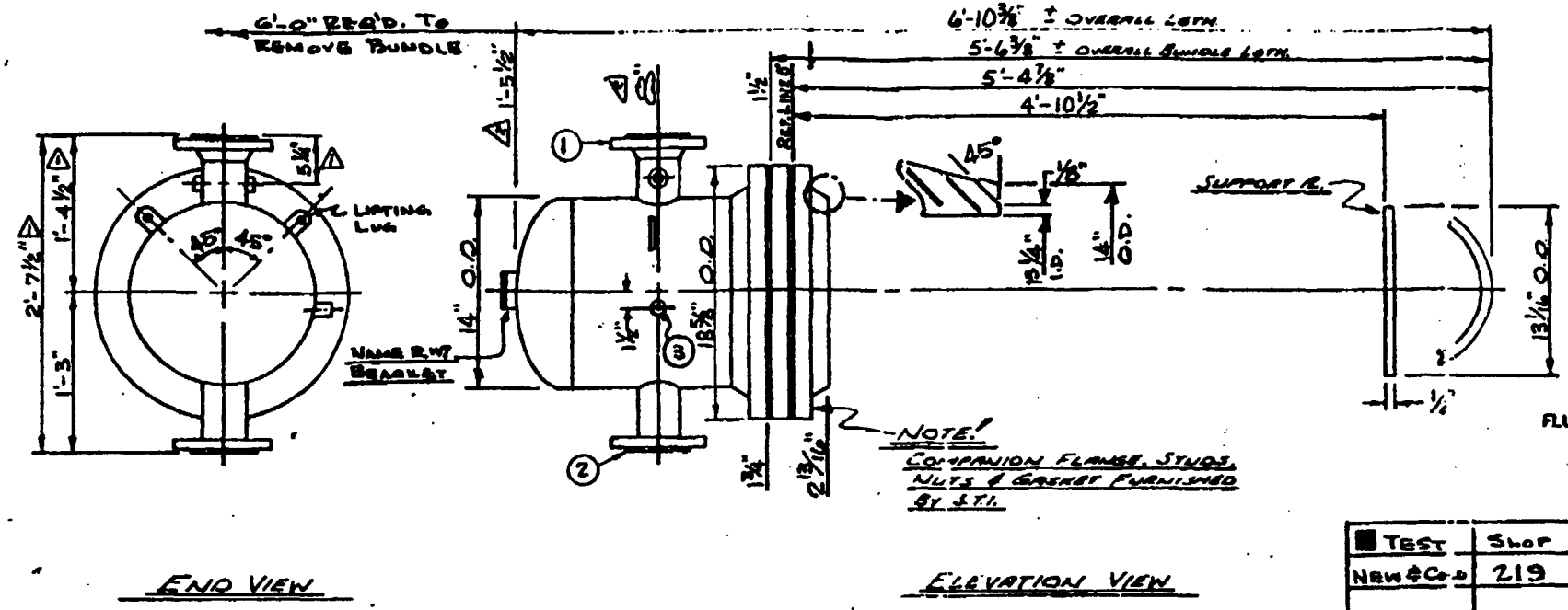

FLUOR ENGINEE

64782

ITEM

■ TEST	SHOP	FIEL
NEW & COLD	219	190

NOTE:
ALL DIMENSIONS FROM REF. LINE 0" (FACE OF FLG.)

*** STRESS RELIEVE U-BENDS FOR 1-HOUR @ 1100°F.
** TUBESHEET LIMITED TO 330 P.S.I.G.
* 125 RMS ON GASKET SURFACE

SPECIFICATIONS			MARK	PURPOSE	SIZE	AUX. CPLGS
ASME CODE SECTION VIII #7 STAMP			1	*CHAN. INLET	3"-150# RF-WN	1-1"-6000# (N.S.) 1-1"-6000# (F.S.) △1
TEMA CLASS "R" - SPOT X-RAY CHAN.			2	*CHAN. OUTLET	1"-150# RF-WN	NONE
HEAT TREAT CHAN. & U-BENDS ***	SHELL	TUBES	3	VENT	1"-6000# CPLG. (P.T.) △1	
DESIGN PRESSURE - PSIG		125 **				
TEST PRESSURE - PSIG		190 ■				
DESIGN TEMPERATURE - °F		520				
CORR ALLOWANCE - INS		1/8				
NUMBER OF PASSES		2				
TUBES - 37 - 3/4" O.D. x 14 BWG (MIN.) x 5'-2" S.L.						
TUBE MATERIAL = SA-179 (KILLED)						
TUBE PITCH - 1" □ SURFACE 79 SQ. FT.						
EXCHANGER MATERIAL = CARBON STL. (KILLED)						
GASKET MATERIAL = *						
ALL BOLT HOLES TO STRADDLE ℄'S.						
PAINT = NONE						

REV.	DATE	BY	CK	DESCRIPTION
△1	4-21-75	[illegible]	[illegible]	REV. PER CUSTOMER
△2	6-20-75	[illegible]	[illegible]	REV. PER S.T.I.

CHAMPLIN PETROL
HIGH SULFUR CRU
CORPUS CHRISTI

* TUBE SIDE: ARMCO IRON DOUBLE JACKETED ASBESTOS FILLED △1
SHELL SIDE: TEFLON TYPE SPIRAL WOUND MONEL (TWO SPARE SET REQUIRED.) △1

= CUSTOMER =
FLUOR ENGINEERS & CONSTUCTORS, INC.
PURCHASE ORDER NO.
647820-4-0433-03
EST. WEIGHTS
DRY 300 WET 1050 BUNDLE 450
CERTIFIED FOR CONSTRUCTION
DATE FEB 27, 1975
BY [illegible]

SHELL & TUBE INC
PO BOX 45364
S&TI

DATE: 11/20/75	DRAWN: [illegible]	CHECKED:
NO. REQ'D: ONE	SIZE: 13-62	
ITEM: 83-E15	SERVICE: HF STRIPPE	

DIMENSIONAL OUTLINE

SHELL AND TUBE HEAT EXCHANGERS FOR GENERAL REFINERY SERVICES - continued

4.10 Gaskets

4.10.1 Gaskets shall be double metal jacketed asbestos-filled, solid metal, or spiral-wound metal asbestos-filled. Spiral-wound gaskets with pass partition strips shall not be used. Means shall be provided to prevent overcompression of spiral-wound gaskets. (This paragraph modifies TEMA R-6.2)

4.10.2 For service involving hydorgen-hydrocarbon mixtures (Platformi Unifining or Hydrobon, Isamax, etc.) girth joint gaskets shall be solid metal type, spiral wound metal-asbestos filled type, or double jacketed metal-asbestos filled type commensurate with the following:

a. Material shall provide hydrogen protection and/or corrosior protection properties, equal to or better than minimum requirement of materials involved at joint.

b. Spiral wound type shall be Flexitallic CGP or equal. For design temperatures above 800°F and lower, type 304 stainle is acceptable.

△2 c. Asbestos filler shall conform to following design temperatı schedule:

Up to 600°F.	Johns Manville 60, or equal
600°F to 1200°F	Johns Manville 219, or equal

△2 4.10.3 Floating-head closures must be designed for solid metal gasket. Solid soft copper shall apply to gasket faces of copper alloys.

4.10.4 When raised face type flanges are used in hydrogen service, tl gasket shall be flexitallic style CGP or equal. Up to 800°F design temperature it shall be type 304 stainless steel spira with asbestos filler per paragraph 4.10.2c. The retainer may carbon steel. Above 800°F the spiral and retainer components shall be type 347 stainless steel.

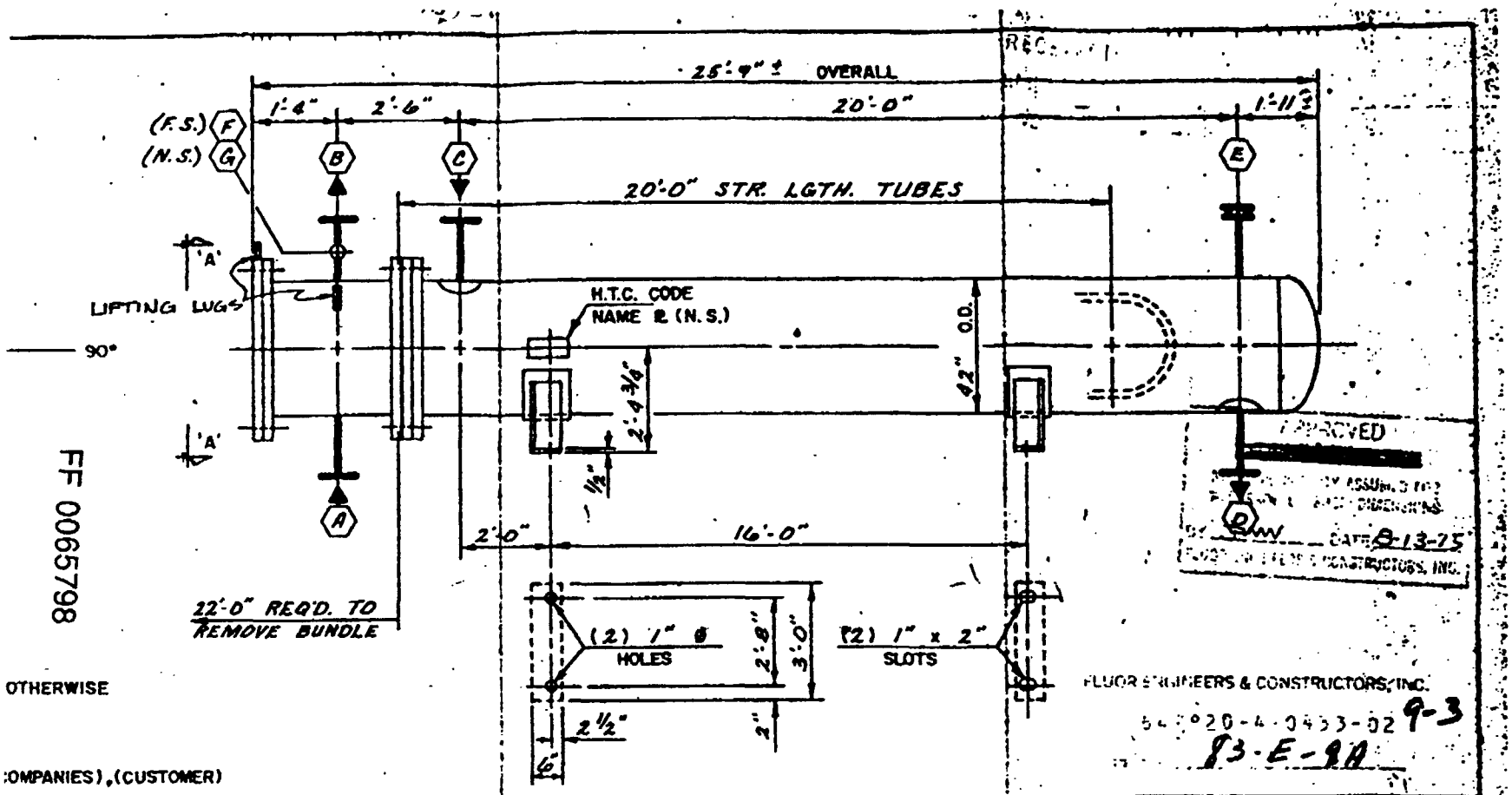

FF 0065798

APPROVED
BY ASSUMING NO RESPONSIBILITY FOR DIMENSIONS
BY _____ DATE 8-13-75
FLUOR ENGINEERS & CONSTRUCTORS, INC.

FLUOR ENGINEERS & CONSTRUCTORS, INC.
647820-4-0433-02 9-3
83-E-9A

OTHERWISE

:OMPANIES), (CUSTOMER)
AST
ER 2.5 TO 3.0 D.F.T.
IN ALL WELDS.
IEF ANNEALED AFTER BENDING.
RANGEMENT.
GASKETS REQ'D.
DDL. JACK. ASBESTOS FILLED AND
FLON SPIRAL-WOUND
IRFACE

MOWELL	¾ PLUG	CERTIFIED FOR CONSTRUCTION by_____ date_____
S. GAGE	¾ PLUG	
ENT	¾ BLIND	
TLET		RADIOGRAPH
LET		SHELL (SPOT)
TLET		CHAN. (SPOT)
LET		P.W.H.T.
RVICE	REMARKS	SHELL (YES)

EXT. TUBE SURFACE PER EXCH.	4452		SQ. FT.
WT. EA. EXCH. LBS.	DRY: 23,200	WET: 37,900	BDL: 13,980
DESIGN CONDITIONS		SHELLSIDE	TUBESIDE
DESIGN PRESSURE, P.S.I.		190	85
DESIGN TEMPERATURE, °F		250	170
HYDRO-TEST PRESSURE, P.S.I.		285	128
CORROSION ALLOW., IN.		1/8	1/8
NUMBER OF PASSES,		ONE (1)	TWO (2)

CODES AND SPECIFICATIONS
ASME SECT. VIII PRESS. VESSELS
DIV. 1, STAMP (YES), TEMA (R)
FLUOR SPEC.:
SP647820-4400.2 REV. 2
SP647820-80-3 REV. 2

REVISION:
1 GEN. REV. G.G. 6/6/75
2 REV. GASKET MAT'L/CUST. 7/29/75 GG. V.M.

HUNT
TOOL COMPANY
HEAT EXCHANGER DIVISION
CORPUS CHRISTI, TEXAS

DR'N.	V.M.	4-10-75
CHK'D.	RM	4-15-75

OUTLINE SIZE 41-240
SERVICE: ISOBUTANE RECYCLE COOLER
CUST. FLUOR / CHAMPLIN
CUST. P.O. Nº 647820-4-0433-02
CUST. ITEM Nº 83-E-9A
Nº EXCH'S. REQ'D. (1) TYPE AEU

HEAT EXCHANGER SPECIFICATION SHEET

Customer:	Pontiac Refining Corp.		Date: 1-1-67
Plant Location:	No. 2 Platforming Unit		Year Built: 1957
Manufacturer:	Western Supply Co.		Installed: 1957
Service of Unit	Rerun Column Bottoms Cooler		Serial No: E-1759
			Item No: 2PE-9
Size: 22" x 16'	Type: Floating Head		Connected in:
Sq. Ft. per Unit: 1035	Shells per Unit: 1		Sq.Ft./Shell: 1035

PERFORMANCE OF ONE UNIT

	Shell Side	Tube Side
Fluid Circulated:	Hvy. Cat Cracked Gasoline	Cooling Water
Total Fluid Entering:	71,000 lb/hr.	62,000 lb/hr. 124 GP
Vapor		
Liquid	71,000 lb/hr.	62,000 lb/hr. 124 GP
Steam		
Non Condensables		
Fluid Vaporized or Condensed:		
Steam Condensed:		
Gravity:	47°API .7927 @ 60 °F	.9953 @ 90 °F
Viscosity:	0.37 Cp @ 133 °F	.77 Cp @ 90 °F
Molecular Weight:		18
Specific Heat:	BTU # °F	1.00 BTU # °F
Latent Heat Vapors:	BTU #	BTU #
Temperature In:	160 °F	90 °F
Temperature Out:	105 °F	120 °F
Operating Pressure:	65 #/Sq.In.	30 #/Sq.In.
Number of Passes:	2	8
Velocity:	Ft./Sec.	3.1 Ft./Sec.
Pressure Drop:	9 #/Sq.In.	8 # Sq.In.
Fouling:	.001	.002

Heat Exchanged:- BTU/Hr. 1,858,000 M.T.D. Corr. 22.6 °F

Transfer Rate:- Service 79 Clean

FF 0059607

CONSTRUCTION

Design Pressure:	150 #/Sq.In.		75 #/Sq.In.
Test Pressure:	225 #Sq.In.		115 #/Sq.In.
Design Temperature:	250°F		250 °F
Tubes: B-111, Inh. Adm.	No. 330 OD 3/4" BWG 16 Min	Length 16'0"	Pitch 15/16
Shell: A-285-C, Steel	ID 21" OD 22"	Thickness 3/8"	
Shell Cover: A-285-C Steel		Flt'g. Head Cover A-20	
Channel: A-285-C Steel		Channel Cover A-212-B	
Tube Sheets:- Stationary B-171 N.R. Brass		Floating B-171 N.R. B	
Baffles:- Cross A-7 Steel	Type Segmental	Thickness 13/16"	
Baffle:- Long A-7 Steel	Type Expandable	Thickness Ga.	
Tube Supports: A-7 Steel		Thickness 1"	
Gaskets: Metal Jacketed Asbestos			
Connections: Shell - In 4" Out 4"		Series 150 lb. RF	
Channel - In 4" Out 4"		Series 150 lb. RF	
Corrosion Allowance:- Shell Side 1/8"		Tube Side 1/8"	
Code Requirements: API ASME & TEMA "R"			
Weights:- Each Shell 7500 lb.	Bundle 3800 lb.	Full of Water 10600	

REMARKS: Long Baffle Packing 1/2" Sq. Braided Graphite Asbestos

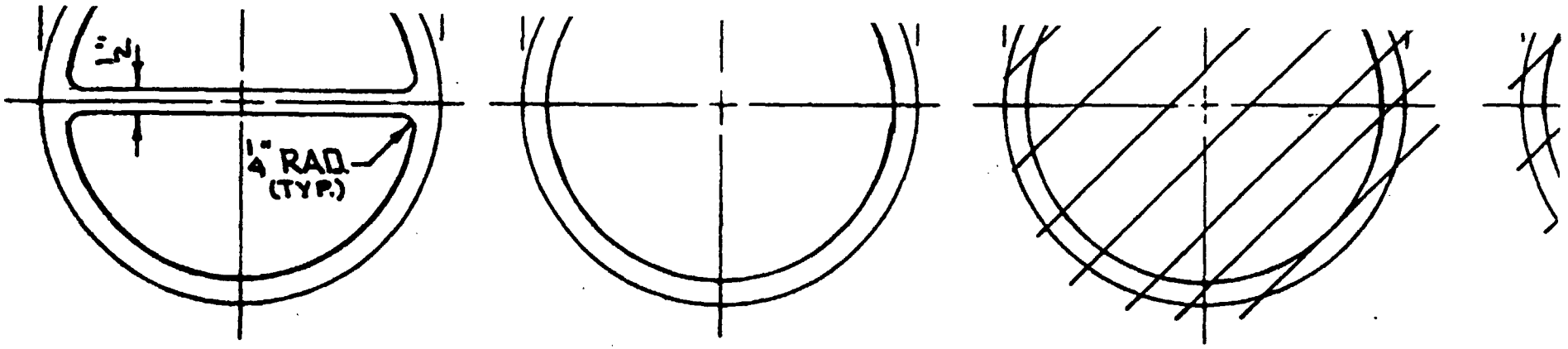

⊛ 1-REQ'D. CHAN COV. GSKT. 1/8" THK. ARMCO IRON DBL. JACKETED ASBESTOS FILLED

⊛ 1-REQ'D. CHAN. GSKT. 1/8" THK. ARMCO IRON DBL. JACKETED ASBESTOS FILLED

~~1-REQ'D. SHELL GSKT. 1/8 THK. ARMCO IRON JACKETED ASBESTOS FILLED~~

⊛ JM-60 EQUAL MA
(FILLER)

U

MFG BY WANER CORPORATION TULSA OKLAHOMA U.S.A.

DIVISION W

PHT.

SHELL SIDE W.P P.S.I	200	AT °F	216	
TUBE SIDE W.P P.S.I	85	AT °F	170	
MFG. NO. SERIAL	*	YEAR BUILT	1975	
USERS. EQUIP NO	**	USERS ORDER NO	647820-4-0429	

LEAN AMINE COOLER

HYDRO TEST: SHELL, 300 PSIG.-TUBE 128 PSIG.

2 NAME R'S. REQ'D.
* SER. NO. ** EQUIP. NO.
X4-2381A — 42-E-2A
X4-2381B — 42-E-2B

APPROVED
EXCEPT AS NOTED
NO RESPONSIBILITY ASSUMED FOR ACCURACY OF SHOP DIMENSIONS
BY _____ DATE _____
FLUOR ENGINEERS & CONSTRUCTORS, INC.

ALL RIB RADII ARE $\frac{1}{4}$"

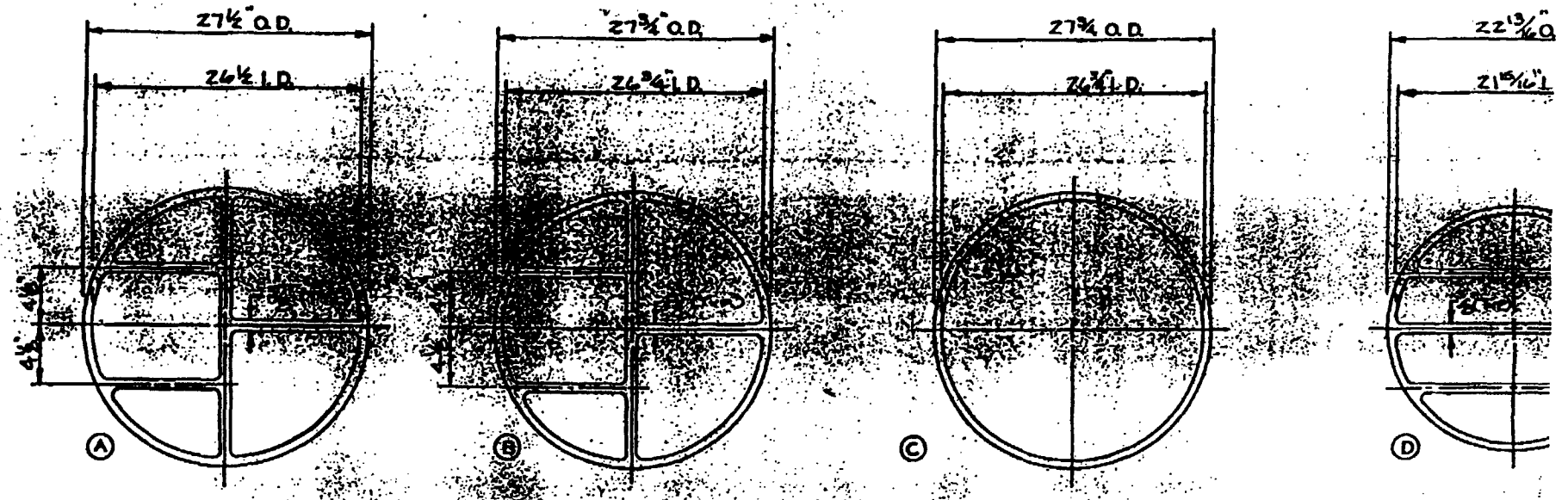

CHANNEL COVER GASKET
ONE REQ'D.
$\frac{1}{8}$" THK ARMCO IRON
JACKETED ASBESTOS
FILLED

CHANNEL GASKET
ONE REQ'D.
$\frac{1}{8}$" THK ARMCO IRON
JACKETED ASBESTOS
FILLED

SHELL GASKET
ONE REQ'D.
$\frac{1}{8}$" THK ARMCO IRON
JACKETED ASBESTOS
FILLED

FLOATING HEA
ONE REQ
$\frac{1}{16}$" THK ARMCO
SOLID
(DEAD SOF
95 BHN (M

REQ'D. AS NOTED
FOR ONE SET

REV	DESCRIPTION	DATE				REQ'D			
					W-636-4	ONE SET	WESTERN SUPPL TULSA, OKLAH		
							GASKET DETA		
							DR J.E.	DATE 10-2-74	SIZE 44"x2
							CK EJC/DK	SCALE NONE	TYPE AK

HEAT EXCHANGER SPECIFICATION SHEET

Customer:	PONTIAC REFINING CORP.	Date:	2-1-67
Plant Location:	FCC UNIT - Cat Cracker	Year Built:	1955
Manufacturer:	Western Supply Co.	Installed:	1955
Service of Unit	Column Bottoms Raw Oil Exchanger	Serial No:	E-535-1
	Side A (North Unit)	Item No:	FCC-FX-
Size: 28" OD x 16'0"	Type: Floating Head	Connected in:	Series
Sq. Ft. per Unit: 2480	Shells per Unit: 2	Sq.Ft./Shell:	1240

PERFORMANCE OF ONE UNIT

	Shell Side	Tube Side
Fluid Circulated:	RAW OIL	HEAVY CYCLE OIL
Total Fluid Entering:	57,500 lb/hr.	44,600 lb/hr.
Vapor		
Liquid	57,500 lb/hr.	44,600 lb/hr.
Steam		
Non Condensables		
Fluid Vaporized or Condensed:		
Steam Condensed:		
Gravity:	25° API @ 60°F	23.1° API @ 60 °F
Viscosity:	3.0 Cp @ 263°F	0.59 Cp @ 416 °F
Molecular Weight:		
Specific Heat:	BTU # °F	BTU # °F
Latent Heat Vapors:	BTU #	BTU #
Temperature In:	125 °F	600 °F
Temperature Out:	400 °F	235 °F
Operating Pressure:	#/Sq.In.	#/Sq.In.
Number of Passes:	1	6
Velocity:	Ft./Sec.	Ft./Sec.
Pressure Drop:	3#/Sq.In.	14 # Sq.In.
Fouling:	.003	.003

Heat Exchanged:- BTU/Hr. 9,690,000 M.T.D. Corr. 115 °F

Transfer Rate:- Service 34.0 Clean

CONSTRUCTION

Design Pressure:	200 #/Sq.In.	150 #/Sq.In.
Test Pressure:	300 #Sq.In.	225 #/Sq.In.
Design Temperature:	450F	600 °F

Tubes: A-179 Smls. Steel No. 296 OD 1" BWG 12 Length 16'0" Pitch 1" S

Shell: A-285-C Steel ID 27¼" OD 28" Thickness 3/8"

Shell Cover: A-201-B Steel Fltg. Head Cover A-201-

Channel: A-285-C Steel Channel Cover A-212-B

Tube Sheets:- Stationary A-212-B Steel Floating A-212-B St

Baffles:- Cross A-7 Steel Type Segmental Thickness 3/16"

Baffle:- Long Type Thickness

Tube Supports: A-7 Steel Thickness 1/2"

Gaskets: 3 = 1/8" THK. Metal Jacketed Asb. 1 - 1/16" THK. Solid Iron

Connections: Shell - In 4" Out 4" Series 300 lb. RF

Channel - In 4" Out 4" Series 300 lb. RF

Corrosion Allowance:- Shell Side 1/8" Tube Side 1/8"

Code Requirements: API - ASME

Weights:- Each Shell 11,800 lb. Bundle 6,500 lb. Full of Water 10,8

REMARKS: Originally marked FX-24 and FX-25 - Both shells designed as 1 Unit
Numbered by HEK

FF 0046167

HEAT EXCHANGER SPECIFICATION SHEET

038-E-013

Customer: Pontiac Refining Corp.		Date: 2-1-67
Plant Location:	FCC Unit - Cat Cracker	Year Built: 1955
Manufacturer:	Western Supply	Installed: 1955
Service of Unit	*Naphtha Recycle Cooler	Serial No: E-534
	(Light Cycle Circ. Oil Cooler)	Item No: FCC-EX-13
Size: 22" OD x 16'0"	Type: Floating Head	Connected in:
Sq. Ft. per Unit: 718	Shells per Unit: 1	Sq.Ft./Shell: 718

PERFORMANCE OF ONE UNIT

	Shell Side	Tube Side
Fluid Circulated:	Naphtha	Cooling Water
Total Fluid Entering:	41,600 lb/hr.	162,700 lb/hr. '32
Vapor		
Liquid	41,600 lb/hr.	162,700 lb/hr. 32
Steam		
Non Condensables		
Fluid Vaporized or Condensed:		
Steam Condensed:		
Gravity:	43.3°API @ 60 °F	.996 @ 90 °F
Viscosity:	0.45 Cp. @ 230°F	.77 Cp. @ 90 °F
Molecular Weight:		18
Specific Heat:	BTU # °F	1.00 BTU = °F
Latent Heat Vapors:	BTU #	BTU =
Temperature In:	340 °F	90 °F
Temperature Out:	120 °F	120 °F
Operating Pressure:	#/Sq.In.	#/Sq.In.
Number of Passes:	1	4
Velocity:	Ft./Sec.	4.5 Ft./Sec.
Pressure Drop:	2 #/Sq.In.	6 # Sq.In.
Fouling:	.001	.002

Heat Exchanged:- BTU/Hr. 4,890,000 M.T.D. Corr. 83.7 °F

Transfer Rate:- Service 81.2 Clean

CONSTRUCTION

Design Pressure:	150 #/Sq.In.	150 #/Sq.In.
Test Pressure:	225 #Sq.In.	225 #/Sq.In.
Design Temperature:	400°F	200 °F

Tubes: Inh.Adm. B-111 No. 172 OD 1" BWG 14 Length 16'0" Pitch 1¼" S

Shell: A-53-B Steel ID 21.188" OD 22" Thickness .406

Shell Cover: A-285-C Steel Fltg.Head Cover A-201-

Channel: A-53-B Steel Channel Cover A-201-B

Tube Sheets:- Stationary A-201-B Steel Floating A-201-B Steel

Baffles:- Cross A-7 Steel Type Segmental Thickness 3/16"

Baffle:- Long Type Thickness

Tube Supports: A-7 Steel Thickness 1/2"

Gaskets: 1/8" THK. Metal Jacketed Asbestos

Connections: Shell - In 3" Out 3" Series 150 lb. RF

Channel - In 4" Out 4" Series 150 lb. RF

Corrosion Allowance:- Shell Side 1/8" Tube Side 1/8"

Code Requirements: API ASME

Weights:- Each Shell 7000 lb. Bundle 3750 lb. Full of Water 10,000

REMARKS: * Original Design

Originally marked FX-2? By?

FF 0046137

UNIVERSAL OIL PRODUCTS COMPANY

30 ALGONQUIN ROAD — DES PLAINES, ILLINOIS, U.S.A.

REQUISITION

DRAWING NUMBER

NO. 2342-20.
SHEET NO. 1
TOTAL SHEETS 1
W. O. NO.
DATE Sept. 8.
APPROVED

MATERIAL INCLUDES —

GASKETS FOR REACTOR RISER

ITEM NO.	QUANTITY	MARK NUMBER	DESCRIPTION OF MATERIAL
			Furnish the following double jacketed corrugated Armco Iron Asbestos filled gaskets:
1	5	72406-G1	32-1/2" I.D. x 33-7/8" O.D.
(2) 2	3	72406-G2	21" I.D. x 25-3/4" O.D.
(2) 3	0	72406-G3	19-1/4" I.D. x 23-1/2" O.D. (THIS ITEM CANCELLED)
			NOTE:
			No spares are included in the above quantities.
			Each item shall be tagged with mark number, requisition number and order number.

REV.	DATE	APPROVED	REV.	DATE	APPROVED	REV.	DATE	APPROVED	ORDER NUMBER
1	NOV 2 '62								FF 0045756
2									

MAH
RH

FORM D-6

BY ACCEPTING THIS ORDER THE SELLER AGREES TO INDEMNIFY AND HOLD HARMLESS THE PURCHASER AND/OR ITS LICENSEES FROM ANY LOSS, DAMAGE OR INJURY ARISING OUT OF A CLAIM OR SUIT FOR ALLEGED INFRINGEMENT OF PATENTS, RELATING TO THE PROPERTY DESCRIBED HEREIN, AND WILL ASSUME THE DEFENSE OF ANY AND ALL SUCH SUITS AND WILL PAY ALL COSTS AND EXPENSES INCIDENTAL THERETO.

WESTERN SUPPLY COMPANY

HEAT EXCHANGER SPECIFICATION SHEET

CUSTOMER	Champlin Petroleum Company		W. O. NO.	
ADDRESS			INQUIRY NO.	74-587
PLANT LOCATION	Corpus Christi, Texas		DATE	6-13-74
SERVICE OF UNIT	Primary Absorber Intercooler		ITEM NO.	GX-3
SIZE	28" x 16'	TYPE Fltg.Head (AFT) (HORIZ.)	CONNECTED IN	-
SQ. FT./UNIT (EFF)	1,006	SHELLS/UNIT 1	SQ. FT./SHELL (EFF)	1,006

PERFORMANCE OF ONE UNIT

	SHELL SIDE	TUBE SIDE
FLUID CIRCULATED	Absorber Rich Oil	Cooling Water
TOTAL FLUID ENTERING	73,097 #/hr	85,000 #/hr
VAPOR		
LIQUID	73,097	85,000
STEAM		
NON-CONDENSABLES		
FLUID VAPORIZED OR CONDENSED		
STEAM CONDENSED		
GRAVITY S.G.	0.68 @ 120 °F	1.0 @ 60 °F
VISCOSITY Cp	0.25/0.28 @ °F	@ °F
MOLECULAR WEIGHT		
SPECIFIC HEAT	BTU/LB.-°F	BTU/LB.-°F
THERMAL CONDUCTIVITY	BTU/HR-FT.-°F	BTU/HR-FT.-°F
LATENT HEAT	BTU/LB	BTU/LB
TEMPERATURE IN	120 °F	90 °F
TEMPERATURE OUT	96 °F	100 °F
OPERATING PRESSURE	189 PSIG	30 PSIG
NO. PASSES PER SHELL	2	8
VELOCITY	FT/SEC	3.7 FT/SEC
PRESSURE DROP	1.0 PSI	8.0 PSI
FOULING RESISTANCE (MIN.)	0.002	0.001

HEAT EXCHANGED-BTU/HR 850,000 MTD CORRECTED-°F 10.7

TRANSFER RATE-SERVICE 79 CLEAN

CONSTRUCTION OF ONE SHELL

DESIGN PRESSURE	225 PSI	75 PSI	
TEST PRESSURE	340 PSI	115 PSI	
DESIGN TEMPERATURE	170 °F	150 °F	

TUBES Smls. A-179 NO. 246 O.D. 1" BWG 12 MIN LENGTH 16' PITCH 1½"Sq.

SHELL	Steel I.D. 28-1/8"	SHELL COVER	Steel (REMOV)
CHANNEL	Steel	CHANNEL COVER	Steel
TUBESHEET-STATIONARY	Steel	TUBESHEET-FLOATING	Steel
BAFFLES-CROSS	Steel TYPE Segmental	FLOATING HEAD COVER	Steel
BAFFLES-LONG	Steel TYPE Multileaf	IMPINGEMENT PROTECTION	YES
TUBE SUPPORTS			
TUBE TO TUBESHEET JOINT			
GASKETS	Metal jacketed asbestos		
CONNECTIONS-SHELL SIDE-IN	6" OUT 6"	RATING	300 RF
TUBE SIDE-IN	4" OUT 4"	RATING	150 RF
CORROSION ALLOWANCE-SHELL SIDE	1/8"	TUBE SIDE	1/8"
CODE REQUIREMENTS	ASME	TEMA CLASS	R

REMARKS

E-132 REV.-3

FF 0044300

REPLACED W/ 87-E-16 (SINGLE UNIT) IN 1975

HEAT EXCHANGER SPECIFICATION SHEET

THIS WAS MOVED TO 83-E-38 IN 1984

Customer:	Pontiac Refining Corp.	Date:	12-1-[illegible]
Plant Location:	No. 1 Alkylation Process Unit	Year Built:	1954
Manufacturer:	Industrial Fabricators Co.	Installed:	1964
Service of Unit:	Depropanizer Condenser	Serial No:	2551-11 an
		Item No:	A-216 A &
Size: 21" x 20'	Type: AEU	Connected in:	Series
Sq. Ft. per Unit: 1654	Shells per Unit: 2	Sq.Ft./Shell:	827

PERFORMANCE OF ONE UNIT

	Shell Side	Tube Side
Fluid Circulated:	Hydrocarbons & HF Acid	Cooling Water
Total Fluid Entering:	30,811 lb/hr.	357,000 lb/hr. 715 GPM
Vapor	(Inc. 466 lb/hr. HF)	
Liquid	30,811 lb/hr.	357,000 lb/hr. 715 G
Steam		
Non Condensables		
Fluid Vaporized or Condensed:	Cond. 30,811 lb/hr.	
Steam Condensed:		
Density:	2.57 lb/cf @ 120 °F.	[illegible] °F
Viscosity:	.100cp @ 130°F	.71 cps @ [illegible] °F
Molecular Wgt. Avg:	49.4	[illegible]
Specific Heat:	BTU # °F	BTU # °F
Latent Heat Vapors:	BTU #	BTU =
Temperature In:	130 °F	[illegible] °F
Temperature Out:	103 °F	[illegible] °F
Operating Pressure:	225 #/Sq.In.	[illegible] #/Sq.In.
Number of Passes:	1	1
Velocity:	Ft./Sec.	[illegible] Ft. Sec.
Pressure Drop:	5 #/Sq.In.	[illegible] #/Sq.In.
Fouling:	.002	.001
Heat Exchanged:- BTU/Hr.	4,100,000	M.T.D. Corr. [illegible] °F
Transfer Rate:- Service	100.0	Clean

CONSTRUCTION

Design Pressure:	350 #/Sq.In.	Test Pressure:	[illegible]
Test Pressure:	525 #/Sq.In.		
Design Temperature:	250 °F		[illegible] °F
Tubes: U-Tubes A-214	Ea. No. 87 OD 1" BWG 11	Length [illegible]	
Shell: A-201-B	ID 21¼" OD 22"	Thickness -/-	
Shell Cover:	Head A-201-B	Flgs. Shell Cover	
Flanges:	A-53-B	Flgs. & Bolting [illegible]	
Bolting:- Studs	A-[illegible]	Nuts	
Gaskets:- Shell Cover	Asbestos Fibrous	Thickness	1/8"
Baffle:- Long	Type	Thickness	
Supports:			
Nozzles: Conn. [illegible] Reinforced Attached: Shell Monel Teflon Spiral Wound			
Connections: Shell - Inl 6" Out 6"&4", A-Vent 2"		Bolting	[illegible]
[illegible]			
[illegible]			
Code requirements:	ASME & TEMA "R"		
Weight:- Each [illegible]	6,200 lb.	Total	12,400 lb.

REMARKS: Impingement baffle at shell inlet nozzle.

FF 0043143

32-E-3A/B

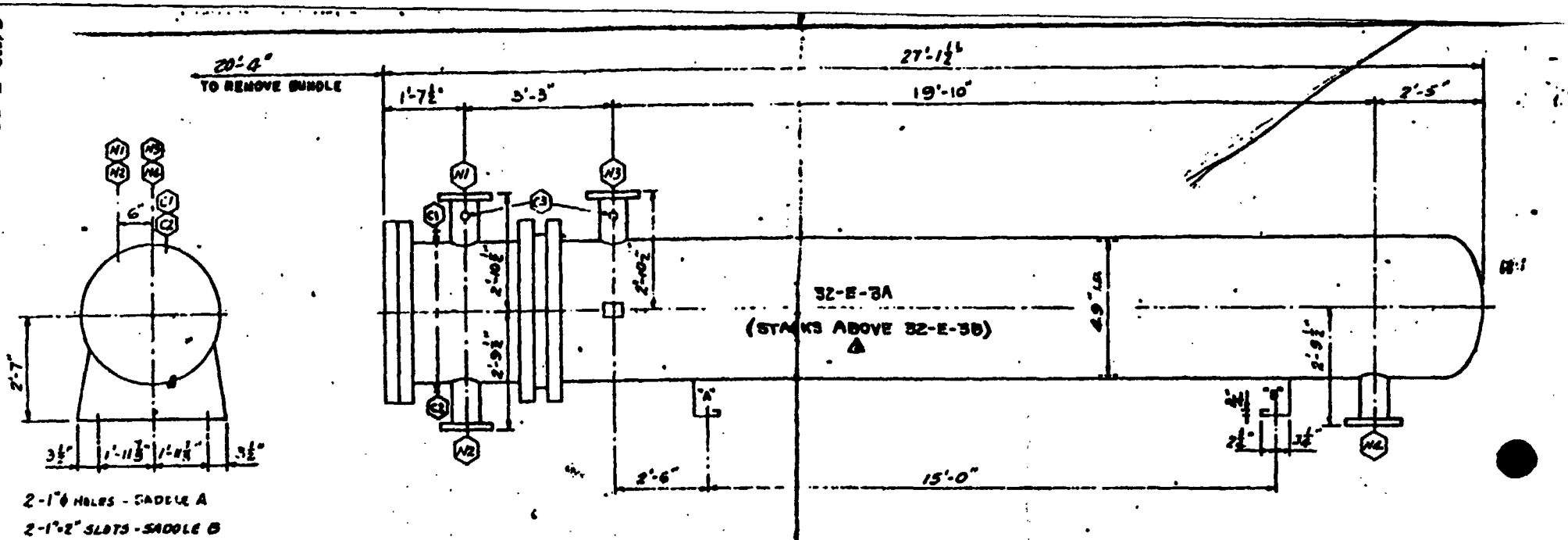

[redacted]

HEJ 3/11/75

N4	16"-300# RF	OUT						
N3	16 RF	IN				C3	1" NPS COUP (NI[illegible])	TWEPG
N1	10"-150# RF	OUT				C2	1" NPS COUP	DRAIN
N2	10"-150# RF	IN				C1	1" NPS COUP	VENT

SCHEDULE OF CONNECTIONS

CERTIFIED PRINT

FEB 25 '75

HOUSTON

SPECIFICATIONS AND OUTLINE DIMENSIONS

CUSTOMER FLUOR ENGINEERS & CONSTRUCTORS, INC.

P. O. NO 647820-4-0406-02

USER CHAMPLIN PETROLEUM CO.

LOCATION CORPUS CHRISTI, TEXAS

REFERENCE 6227-A

NO. HES-74080-

SHEET 2 OF 3

REVISIONS: REDRAWN, GEN. RW 1-16-75; ADD STACKING PLATE 2-25-75

RECEIVED

FLUOR ENGINEERS & CONSTRUCTORS, INC.

647820-4-0405-02-2-2

ITEM 32-E-3

FF 0041197

32-E-3A/B

DESCRIPTION:

SERVICE: HP TRIM CONDENSER ITEM NO: 32-E-3 A&B

FLUID CIRCULATED:

SHELL: LT. SOUR HC

CHANNEL: COOLING WATER

SIZE: 49-240 TEMA TYPE: AEU TEMA CLASS: R

△ SURFACE EACH EXCHANGER: 6375 NET, SQ. FT.

NO. PASSES: SHELL-ONE; CHANNEL-FOUR

WEIGHTS: (EACH EXCHANGER) 44800 DRY, 62700 WET, 27300 BUNDLE

DESIGN AND CONSTRUCTION REQUIREMENTS:

ASME, SECTION 8, DIV.1, NON-LETHAL SERVICE

FLUOR SPECIFICATIONS: SPEC. SHT., 32-E-3, REV.2

△ SP-647820-4400.2, REV.2, SEC.1 THRU 8, SHELL & CHANNEL SIDE; SEC. 11, SHELL SIDE

△ SP-647820-80-3, REV.2

DESIGN CONDITIONS:

CHANNEL: CARBON STEEL

DESIGN PRES 85 PSI @ 170°F. DESIGN TEMP; CORR. ALLOW 1/8, INCHES

△ GASKETS: CS DBL JKT ASB - CONFINED

SHELL: CARBON STEEL

DESIGN PRES 280 PSI @ 180°F. DESIGN TEMP; CORR. ALLOW 1/8, INCHES

GASKETS: CS DBL JKT ASB - CONFINED

TUBE SHEETS: CARBON STEEL

SHELL SIDE

DESIGN PRES 280 PSI @ 180°F. DESIGN TEMP; CORR. ALLOW 1/8, INCHES

CHANNEL SIDE

DESIGN PRES 85 PSI @ 180°F. DESIGN TEMP; CORR. ALLOW 3/8, INCHES

TUBES: WLD CARBON STEEL SA-214 DESIGN TEMP. 180°F. 1" ROTATED SQ. TUBE PITCH 773 (U) TUBES, 3/4" O.D. 0.085 MIN WALL, 20'-0" STR. LG. HORIZ. BENDS

CROSS BAFFLES: CARBON STEEL

MISC. BUNDLE PARTS: CARBON STEEL

APPROVED

[redacted]

NO RESPONSIBILITY ASSUMED FOR ACCURACY OF SHOP DIMENSIONS

BY HEJ DATE 3/11/75

FLUOR ENGINEERS & CONSTRUCTORS, INC.

FF 0041198

CERTIFIED PRINT

Feb 25 '75

HOUSTON

SPECIFICATIONS AND OUTLINE DIMENSIONS

CUSTOMER	FLUOR ENGINEERS & CONSTRUCTORS, INC.	REFERENCE	6227
P O NO	647820-4-0406-02	NO. HES-	74080-1
USER	CHAMPLIN PETROLEUM CO.	SHEET	1 OF 13
LOCATION	CORPUS CHRISTI, TEXAS		

△ RETYPED, ADDED SURFACE, REV. SPEC. & GASKET 1-16-75

△ Rev. Spec. 7-26-75

RECEIVED

FLUOR ENGINEERS & CONSTRUCTORS, INC.

647820-4-0406-02 1-2

ITEM 32-E-3

UOP SPECIFICATION 295

REV. 6 JANUARY 14, 1969

THERMAL INSULATION

NOTE – THESE DATA ARE CONFIDENTIAL AND THE PROPERTY OF UNIVERSAL OIL PRODUCTS COMPANY AND SHALL NOT BE DISCLOSED TO OTHERS OR REPRODUCED IN ANY MANNER OR USED FOR ANY PURPOSE WHATSOEVER EXCEPT BY WRITTEN PERMISSION OR AS PROVIDED IN A SIGNED AGREEMENT WITH UNIVERSAL OIL PRODUCTS COMPANY RELATING TO SUCH DATA.

PROCESS DIVISION

FF 0039903

INDEX

	PAGES
I GENERAL	
A SCOPE	3
B DEFINITIONS	3
C REQUIREMENTS	3
D TYPES	3
E SUBSTITUTIONS	3
II MATERIALS	
GENERAL	4
A BLANKET INSULATION FOR VESSELS AND EXCHANGERS	4
B BLOCK INSULATION FOR VESSELS AND EXCHANGERS	4
C PIPE INSULATION	4–5
D LOOSE MINERAL FIBER	5
E THERMAL INSULATING AND FINISHING CEMENT	5
F MASTIC WEATHERPROOF COATING	5
G ASBESTOS CLOTH	5
H MASTIC SEALER	5
J LAP SEALER	5
L WEATHERPROOFING – FIRE RETARDANT JACKET	6
M WIRE MESH, HARDWARE CLOTH	6
N WEATHERPROOFING – ALUMINUM AND WEATHERPROOFING REINFORCEMENT	6
P SCREW FASTENERS	6
R BANDS	6
S WIRE	6
T SUPPORTS AND STOPS	6
III APPLICATION	
A GENERAL REQUIREMENTS	6
B VERTICAL VESSELS	6–7
C HORIZONTAL VESSELS AND EXCHANGERS	7
D PIPING	7
E PUMPS AND TURBINES	7

DRAWINGS

FIG. 295–1	VERTICAL VESSELS – BLANKET INSULATION WITH MASTIC WEATHERPROOFING THROUGHOUT	9
FIG. 295–2	VERTICAL VESSELS – BLANKET INSULATION WITH ALUMINUM WEATHERPROOFING ON SHELL, TOP HEAD AND OUTSIDE OF SKIRT – MASTIC WEATHERPROOFING ELSEWHERE	10

PAGES

FIG. 295–3 VERTICAL VESSELS – BLOCK INSULATION WITH MASTIC WEATHERPROOFING THROUGHOUT 11

FIG. 295–4 VERTICAL VESSELS – BLOCK INSULATION WITH ALUMINUM WEATHERPROOFING ON SHELL, TOP HEAD AND OUTSIDE OF SKIRT – MASTIC WEATHERPROOFING ELSEWHERE 12

FIG. 295–5 SUPPORTS FOR BLANKET INSULATION WITH ALUMINUM WEATHERPROOFING 13

FIG. 295–6 SUPPORTS FOR BLANKET INSULATION WITH MASTIC WEATHERPROOFING 13

FIG. 295–7 SUPPORTS FOR BLOCK INSULATION 14

FIG. 295–8 CLIPS ON HEADS AND INSIDE OF SKIRT FOR BLANKET OR BLOCK INSULATION 14

FIG. 295–9 EXPANSION JOINT – BLANKET INSULATION WITH MASTIC WEATHERPROOFING 15

FIG. 295–10 EXPANSION JOINT – BLOCK INSULATION WITH MASTIC WEATHERPROOFING 15

FIG. 295–11 FLASHING AT NOZZLES OR OTHER PROJECTIONS – MASTIC WEATHERPROOFING 15

FIG. 295–12 EXPANSION JOINT – BLANKET INSULATION WITH ALUMINUM WEATHERPROOFING 16

FIG. 295–13 EXPANSION JOINT – BLOCK INSULATION WITH ALUMINUM WEATHERPROOFING 16

FIG. 295–14 FLASHING AT NOZZLES OR OTHER PROJECTIONS – ALUMINUM WEATHERPROOFING 16

FIG. 295–15 BLANKET INSULATION WITH MASTIC WEATHERPROOFING 17

FIG. 295–16 BLANKET INSULATION WITH ALUMINUM WEATHERPROOFING 17

FIG. 295–17 BLOCK INSULATION WITH MASTIC WEATHERPROOFING 18

FIG. 295–18 BLOCK INSULATION WITH ALUMINUM WEATHERPROOFING 18

FIG. 295–19 DETAILS OF PIPE INSULATION 19

FF 0039905

I. GENERAL

A. Scope

1. This specification covers the materials and their application for the external thermal insulation of refinery vessels, exchangers, piping, pumps and turbines operating between 70°F. and 1400°F.
2. The insulation described is for the conservation of heat, maintenance of operating temperatures and for the protection of personnel.
3. Exceptions, variations or additions to this specification will be shown on the Project Specifications.

B. Definitions

1. The thickness of insulation given is the nominal thickness of the basic insulating medium, such as blankets or blocks, and does not include the finishing or weatherproofing materials.
2. Definitions of terms used in this specification shall be in accordance with ASTM Specification C 168 (latest edition).

C. Requirements

1. The vessels and exchangers requiring insulation are indicated on the Piping and Instrument Diagram. The temperature for which the vessels are to be insulated shall be the design temperature listed in the Project Specification – Vessels, and for the exchangers the higher of the inlet and outlet temperatures given in the Project Specification – Heat Exchangers.
2. All turbines and the steam ends of all reciprocating pumps are to be insulated. The liquid ends of reciprocating pumps and centrifugal pumps requiring insulation are indicated on the Piping and Instrument Diagram. The temperature for which turbines and steam ends of reciprocating pumps are to be insulated shall be the temperature of the steam supply, and for the liquid ends of reciprocating pumps and centrifugal pumps, the pumping temperatures. These are given in the Project Specification – Pumps and Drivers.
3. With the exception of steam supply, exhaust and condensate lines, the piping requiring insulation is indicated on the Piping and Instrument Diagrams. The temperatures for which the piping is to be insulated shall be determined by the temperatures of the equipment which it serves, as follows:
   (a) The design temperatures of vessel shells without internal insulating lining as given in the Project Specification – Vessels. The temperatures of contents of internally insulated vessels also given in the Project Specification – Vessels, or Project Specification – Reactors.
   (b) The operating temperatures of exchangers given in the Project Specification – Exchangers.
   (c) The temperature of the turbine steam supply, the temperature of the reciprocating pump steam supply and the pumping temperatures given in the Project Specification – Pumps and Drivers.
   (d) The inlet and outlet temperatures of heaters given in Project Specification – Heaters.
4. All steam supply, exhaust and condensate lines except lines exhausting to atmosphere shall be insulated for their operating temperatures.
5. External stiffening rings on vessels shall have insulation of the same thickness required for the vessels.
6. Where otherwise not specified, vessels, exchangers, pumps and piping with bare metal temperatures above 160°F. shall be insulated or otherwise guarded for protection of personnel when located where operators may readily come in contact with them.
7. The thickness of insulation shall be as given in this specification.

D. Types

1. Blanket insulation shall be used on vessels and exchangers unless otherwise specified.
2. Preformed insulation shall be used on piping and precut sections of pipe insulation shall be used on valves and fittings.
3. Thermal insulating and finishing cement shall be used on pumps and turbines.
4. Mastic weatherproof coating shall be used on vessel and exchanger insulation unless otherwise specified.
5. Fire retardant asbestos felt jacket shall be used for weatherproofing pipe insulation unless otherwise specified. Mastic weatherproof coating shall be used on valve and fitting insulation.
6. Mastic weatherproof coating shall be used on pump and turbine insulation.

FF 0039906

E. Substitutions

1. Substitutions of different materials, thicknesses or properties will not be acceptable unless approved by the customer.
2. Where materials are identified by their trade names it is understood that materials having equivalent properties may be used.

II MATERIALS

GENERAL

1. Where ASTM Specifications are given, they shall be the latest editions.
2. In no instance shall insulating materials be used above the limiting temperatures given in the ASTM Specification or by the manufacturer, whichever is the lower.
3. Subheads A to T in this section are referenced by use of the letter in the figures included in this specification.
4. Material used for insulating austinetic stainless steel shall be of a type which will not contribute to stress corrosion cracking.

A. Blanket Insulation for Vessels and Exchangers

1. Blanket insulation shall comply with ASTM Specification C 592. Blankets shall be faced on one side with woven wire mesh and on the other side with expanded metal lath.
2. The thickness required for vessels and exchangers over 24" in diameter shall be:

Temperature °F.	Thickness in Inches
70 to 200	1
201 to 300	1½
301 to 500	2
501 to 700	2½
701 to 900	3
901 to 1000	3½
1001 to 1200	4

3. For vessels and exchangers up to 24", outside diameter pipe insulation as per IIC may be used.

B. Block Insulation for Vessels and Exchangers

1. Material shall be one of the following:

Type	ASTM Spec.
Mineral Fiber	C 392
Calcium Silicate	C 533
Amosite Asbestos	(Note A.)
Diatomaceous Earth	C 517
Expanded Silica	(Note B.)

2. The thickness required for vessels and exchangers over 24" in diameter shall be:

Temperature °F.	Thickness in Inches
70 to 200	1
201 to 400	1½
401 to 600	2
601 to 800	2½
801 to 1000	3
1001 to 1150	3½
1151 to 1300	4
1301 to 1400	4½

Note A. Amosite Asbestos may be "Unibestos" as manufactured by Pittsburgh Corning Corp., or equal. This material may be suitable for use on stainless steel. Check with manufacturer.

Note B. Expanded Silica may be "Careytemp" as manufactured by The Philip Carey Mfg. Company, or equal. This material may be suitable for use on alloy steel and aluminum equipment. Check with manufacturer.

3. All blocks shall be properly lagged to form tight joints. See ASTM Specification C450 for recommended practice for cutting the blocks.
4. For vessels or exchangers up to 24" outside diameter, pipe insulation as per II-C shall be used.

C. Pipe Insulation

1. Material shall be one of the following:

Type	ASTM Spec.
Mineral Fiber	C 592
Calcium Silicate (Note C.)	C 533
Amosite Asbestos (Note D.)	C 391
Diatomaceous Earth	C 517
Expanded Silica	(Note E.)

FF 0039907

2. See ASTM Specification C 585 for recommended dimensions of insulation for nominal pipe sizes.

3. For required nominal thicknesses see Table I. For pipes over 24" outside diameter use thicknesses given for vessels and exchangers under II-B.

NOMINAL PIPE SIZE (NPS SYSTEM)	TEMPERATURES °F					
	70-400	401-600	601-800	801-1000	1001-1200	1201-1400
1½" & Smaller	1"	1"	1½"	2"	2½"	2½"
2"	1"	1"	1½"	2½"	2½"	3"
3"	1"	1"	1½"	2½"	3"	3½"
4"	1"	1"	1½"	2½"	3"	3½"
6"	1"	1½"	2"	2½"	3"	3½"
8"	1½"	1½"	2"	2½"	3½"	4"
10"	1½"	1½"	2"	2½"	3½"	4"
12"	1½"	1½"	2"	3"	3½"	4"
14"	1½"	1½"	2"	3"	3½"	4"
16"	1½"	1½"	2½"	3"	4"	4½"
18"	1½"	1½"	2½"	3"	4"	4½"
20"	1½"	1½"	2½"	3"	4"	4½"
24"	1½"	1½"	2½"	3"	4"	4½"

Note C. Laminated calcium silicate is also acceptable.

Note D. Amosite Asbestos may be "Unibestos" as manufactured by Pittsburgh Corning Corp. or equal. This material may be used on stainless steel piping. Check with manufacturer.

Note E. Expanded silica may be "Careytemp" as manufactured by The Philip Carey Mfg. Company, or equal. This material may be used on alloy steel and aluminum piping. Check with manufacturer.

D. Loose Mineral Fiber

Material shall be rock, slag or glass, processed from a molten state into fibrous form and collected into a fluffy mass without regard to form or dimension. It shall be suitable for use at 1200°F.

E. Thermal Insulating and Finishing Cement

1. Cement shall comply with ASTM Specification C 449.

2. When the equipment temperature exceeds the allowable limit of the above, an under layer of thermal insulating cement complying with ASTM Specification C 197 shall be used.

F. Mastic Weatherproof Coating

1. Material shall consist of a fibrated mastic or vinyl suspension, in ready mixed form. It shall be self extinguishing, elastic and durable under extreme weather conditions. It shall finish to a smooth surface.

2. It shall be suitable for temperatures to 250°F.

G. Asbestos Cloth

A Woven cloth containing 95% asbestos and weighing 2¼ lbs. per sq. yd. shall be used.

H. Mastic Sealer

Mastic shall be a heavy semi-viscous paste composed of inorganic fibers, non-drying oils and pigment coloring agents, The Eagle-Picher Company's Stalastic high temperature grade, or equal, is acceptable.

J. Lap Sealer

For aluminum weatherproofing a suitable flexible plastic sealing compound shall be used for all lap joints excepting expansion joints. Benjamin Foster Company's 30–45 Foamseal or Pittsburgh Corning Corp. Pittseal III, are acceptable brands.

L. Weatherproofing – Fire-Retardant Jacket

Material shall consist of one sheet of asphalt saturated asbestos felt over which an unsaturated asbestos felt has been cemented for an outer surface. It shall not drip asphalt at 200°F., carry flame or support combustion. It shall weigh approximately 55 lbs. per 108 sq. ft. roll.

M. Wire Mesh, Hardware Cloth and Weatherproofing Reinforcement

1. Wire mesh shall be #20 gage 1" hexagonal mesh galvanized netting.
2. Hardware cloth shall be #23 gage wire 4 x 4 mesh galvanized.
3. Weatherproofing reinforcement may be 10 or 20X open weave glass fabric.

N. Weatherproofing – Aluminum

1. Aluminum sheets for vertical vessel shells shall be "Roofing Alloy", 0.019" minimum thickness, corrugated 1¼" centers, with a factory applied vapor barrier, preferably polyethylene coated 64 lb. natural kraft paper fully resin bonded. It shall be suitable for 250°F.
2. Aluminum sheeting for heads of vertical vessels, except those within skirts, and for shells and heads of horizontal vessels and exchangers, and for piping shall comply with ASTM Specification B 209, Type 3003-H14, 0.016" minimum thickness, cross crimped, with a factory applied vapor barrier, preferably polyethylene coated 40 lb. natural kraft paper fully resin bonded. It shall be suitable for 250°F.

P. Screw Fasteners

1. Sheet metal screws for fastening aluminum sheets to steel ring supports shall be 1/4" x 3/8" long, stainless steel, hexagon head, self tapping, type B.
2. Sheet metal screws for aluminum sheet lap joints shall be #7 x 3/8" long aluminum, pan head, self tapping, type A with neoprene washers under head.

R. Bands

1. Bands for securing blanket or block insulation to vessels and exchangers shall be 3/4" x .020" stainless steel, with seals.
2. Bands for securing aluminum weatherproofing to vessels and exchangers shall be 3/4" x .020" stainless steel, with seals.
3. Bands for securing aluminum weatherproofing to piping shall be 1/2" x .020" aluminum, with seals.
4. Bands shall be equipped with expansion elements when necessary due to equipment expansion.

S. Wire

Wire for girdles, ties and lacing shall be soft galvanized steel.

T. Supports and Stops

1. For vessels, support rings and lugs shall be steel conforming to ASTM A 36 and shall be furnished with the vessel.
2. For vertical piping, stops and supports where required shall be furnished by the insulation applicator.

III APPLICATION

A. General Requirements

1. The surfaces to be insulated shall be cleaned of all dirt, oil, grease and other foreign matter.
2. Precautions shall be taken during application to control the spread of waste products, and on completion of application the entire area shall be thoroughly cleared of all waste insulating materials.
3. Any proposed alternate method of application must be approved in writing by UOP Process Division.

B. Vertical Vessels

Insulation shall be applied in accordance with figures given below. Vessels insulated for temperatures over 850°F. shall have the upper two feet (minimum) of supporting skirt insulated both inside and outside. Flat manway covers need not be insulated. Dished head covers shall be insulated.

	Weatherproofing	
	Mastic	Aluminum
Blanket Insulation	Fig. 295-1	Fig. 295-2
Block Insulation	Fig. 295-3	Fig. 295-4

C. Horizontal Vessels and Exchangers

Insulation shall be applied in accordance with figures given below. Flat manway covers on vessels, shell flange and channels flanges on heat exchangers are not insulated. Dished head covers shall be insulated. Stop insulation short of flanges to permit bolt withdrawal and seal edges with mastic sealer. Fin tube exchanger banks shal be insulated as a unit.

	Weatherproofing	
	Mastic	Aluminum
Blanket Insulation	Fig. 295-15	Fig. 295-16
Block Insulation	Fig. 295-17	Fig. 295-18

D. Piping

Insulation shall be applied in accordance with Fig. 295-19. Flanges, valves and fittings on insulated steam supply, exhaust and condensate lines shall also be insulated. Flanges and valves on insulated process lines are not to be insulated unless required by steam tracing details. Metal shoes will be welded to insulated pipes where they rest on support beams. See ASTM Specification C 450 for recommended practice for cutting fitting covers.

E. Pumps and Turbines

1. Apply thermal insulating and finishing cement in approximately ¾" thick courses on pumps and turbines, covering first, third and final coats with wire mesh laced with #16 gage wire. Apply mastic weatherproofing, 1/8" thick when dry over final coat.
2. Thickness required for pumps and turbines shall be:

Temperature °F.	Thickness in Inches
70 to 150	1
251 to 400	2
401 to 600	3
601 to 800	4

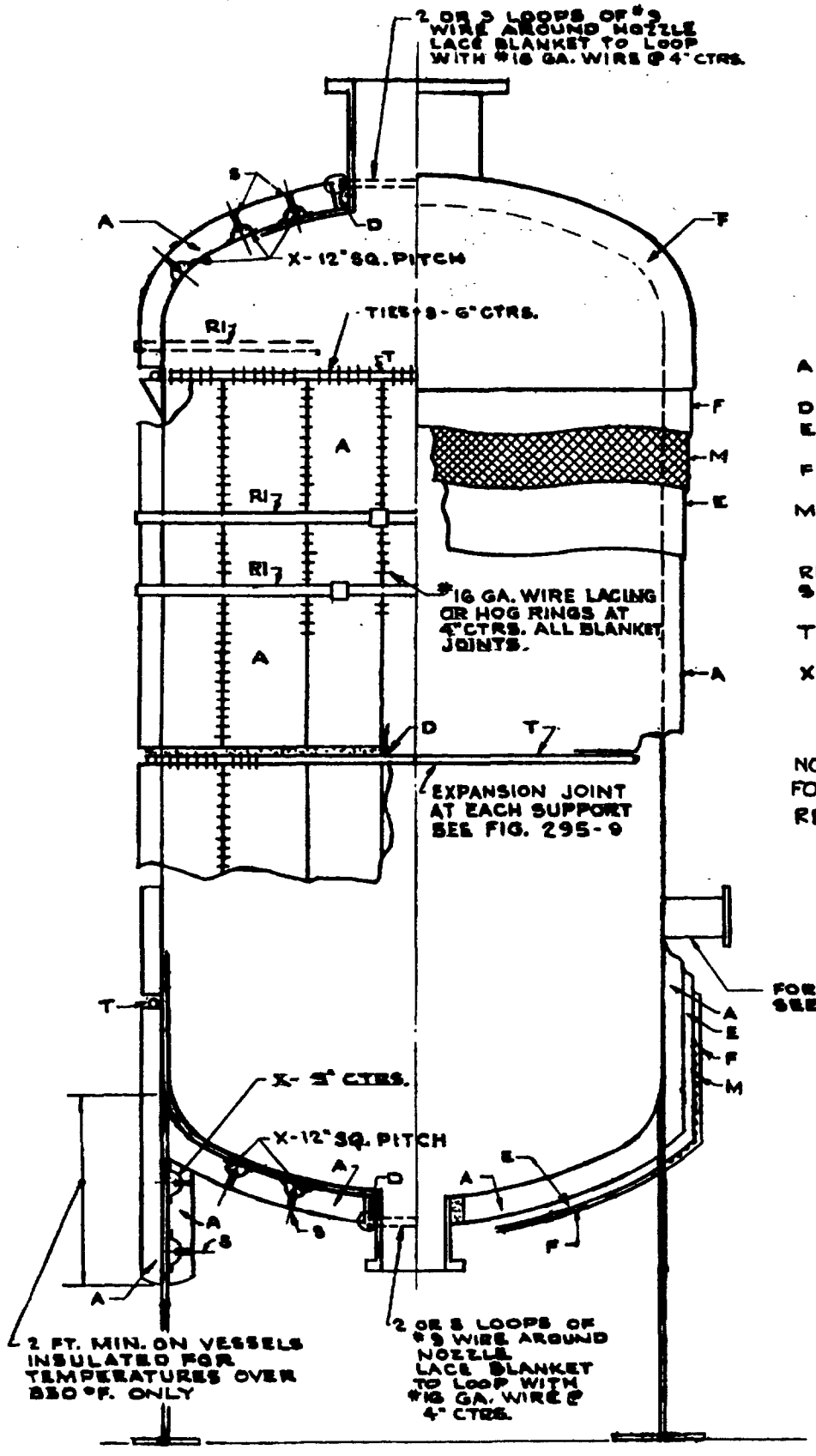

FF 0039911

FIG. 295-1

VERTICAL VESSELS - BLANKET INSULATION WITH MASTIC WEATHERPROOFING THROUGHOUT

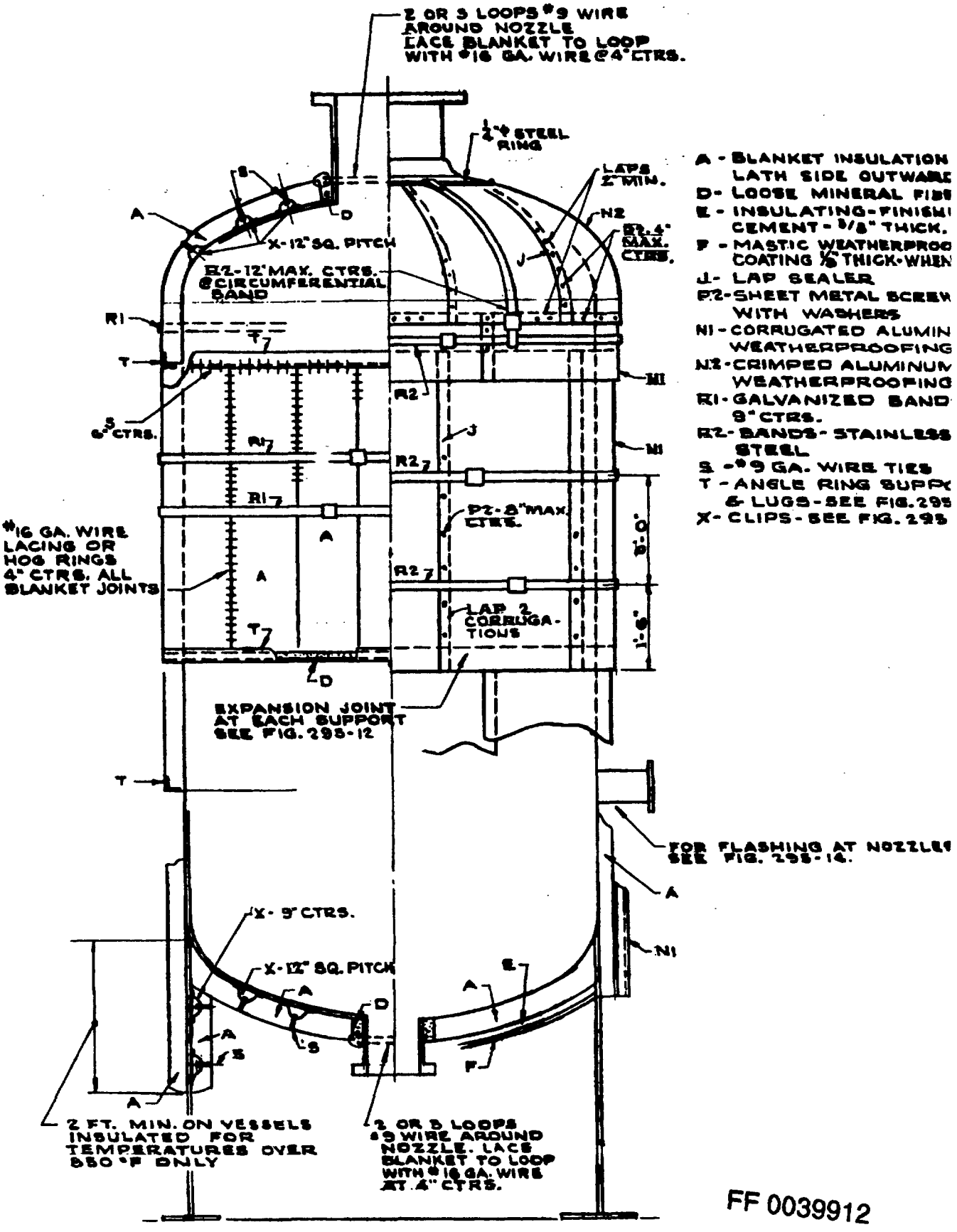

FF 0039912

FIG. 295-2

VERTICAL VESSELS - BLANKET INSULATION WITH ALUMINUM WEATHERPROOFING ON SHELL & TOP HEAD. MASTIC WEATHERPROOFING ELSEWHERE.

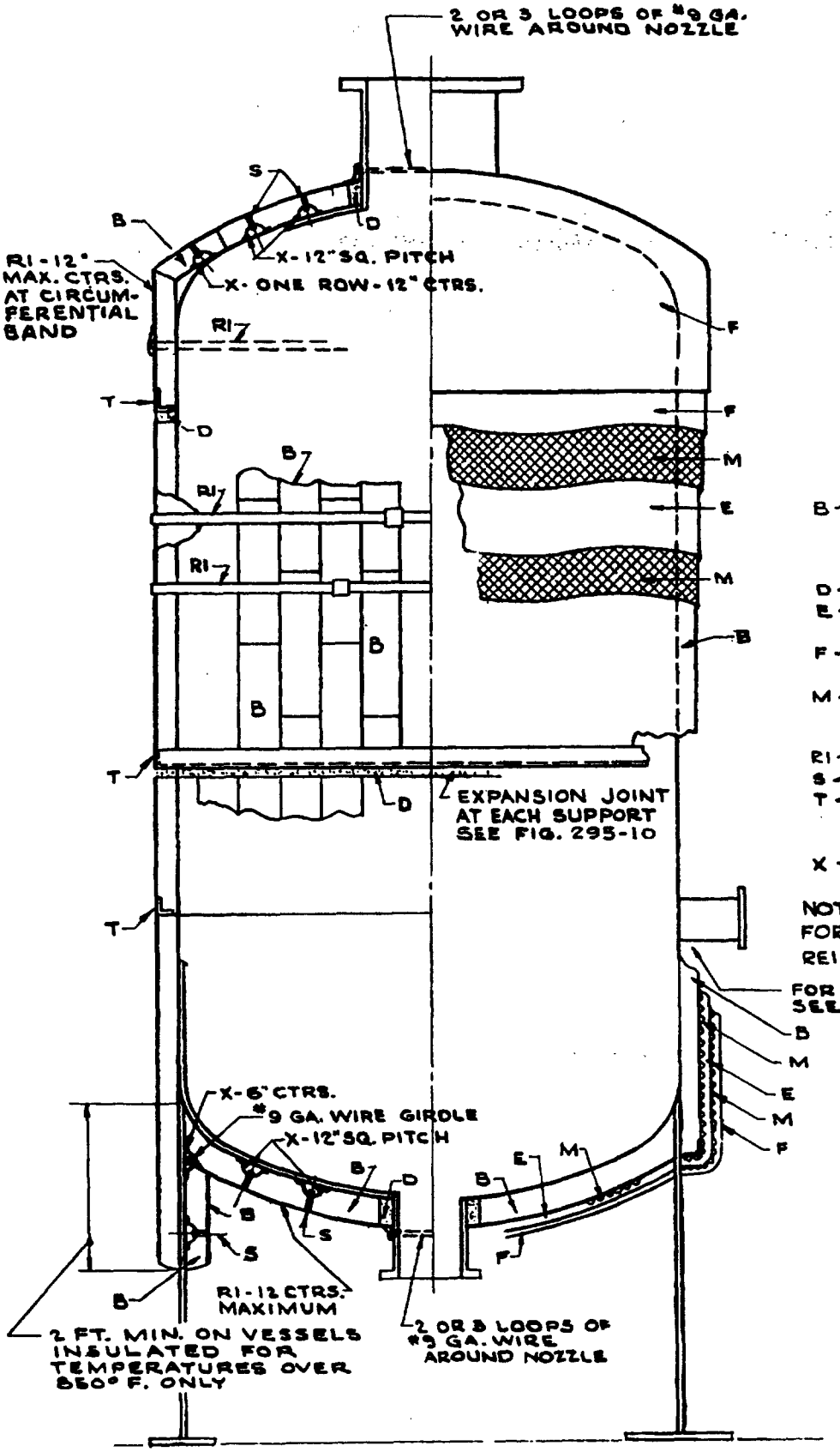

B - BLOCK INSULATION. POINT UP JOINTS AND BRUISES WITH INSULATING FINISHING CEMENT.
D - LOOSE MINERAL FIBER
E - INSULATING-FINISHING CEMENT - 3/8" THICK
F - MASTIC WEATHERPROOF COATING 1/8" THICK-WHEN DRY
M - WIRE MESH - LACE EDGES WITH #16 GA. WIRE (SEE NOTE)
RI - GALVANIZED BANDS 9" CTR
S - #9 GA. WIRE TIES
T - ANGLE RING SUPPORT & LUGS. SEE FIG. 295-7.
X - CLIPS - SEE FIG. 295-8

NOTE: GLASS FABRIC MAY BE USE FOR MASTIC WEATHERPROOFING REINFORCEMENT.

FOR FLASHING AT NOZZLES SEE FIG. 295-11

FF 0039913

FIG. 295-3

VERTICAL VESSELS - BLOCK INSULATION WITH MASTIC WEATHERPROOFING THROUGHOUT

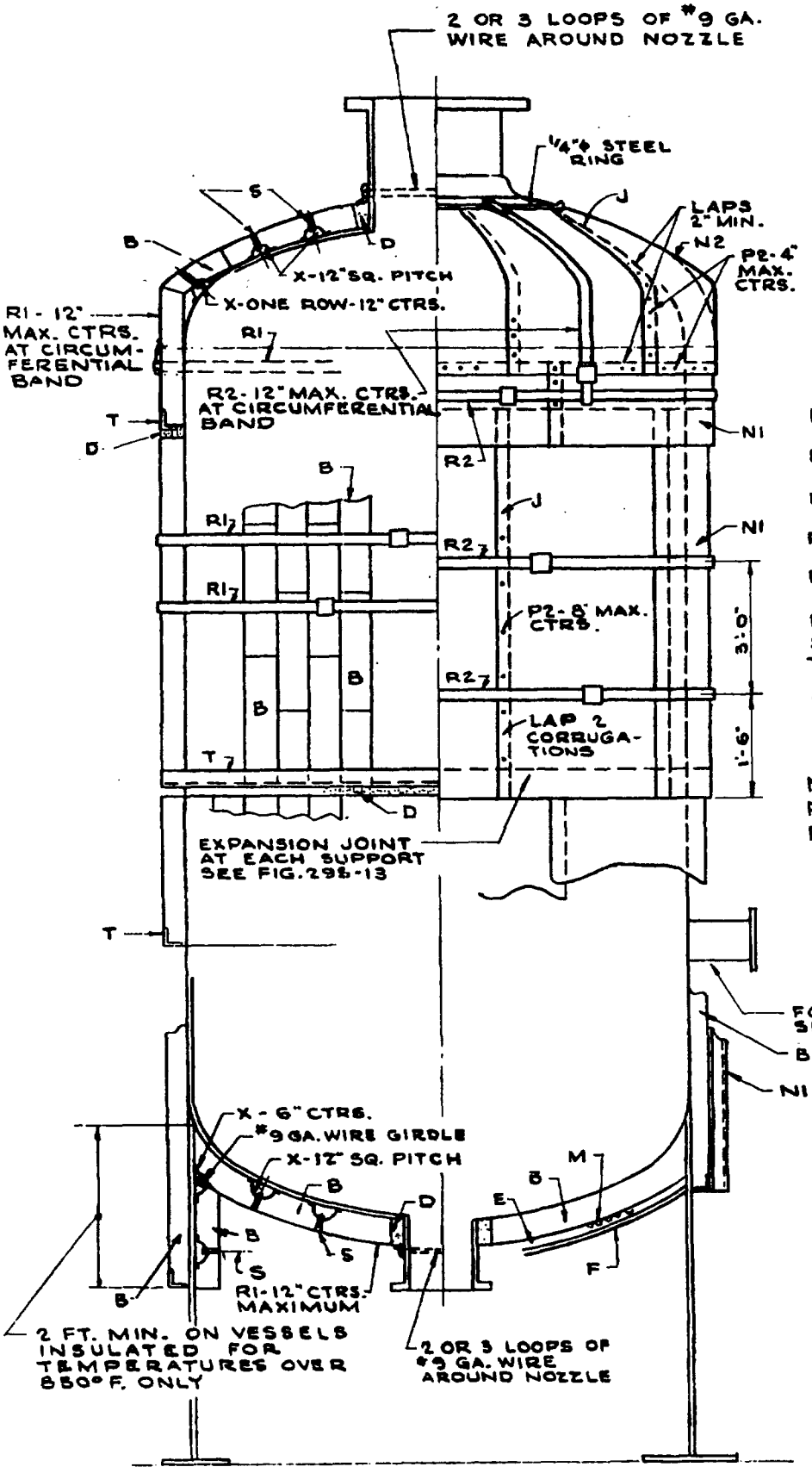

B - BLOCK INSULATION POINT UP JOINTS & BRUISES WITH INSULATING-FINISHING CEMENT.
D - LOOSE MINERAL FIBER
E - INSULATING-FINISHING CEMENT - 3/8" THICK
F - MASTIC WEATHERPROOF COATING 1/8" THICK WHEN DRY.
J - LAP SEALER
M - WIRE MESH - LACE EDGES WITH #16 GA. WIRE (SEE NOTE
N1 - CORRUGATED ALUMINUM WEATHERPROOFING
N2 - CRIMPED ALUMINUM WEATHERPROOFING
P2 - SHEET METAL SCREWS WITH WASHERS
R1 - GALVANIZED BANDS AT 9" CTRS.
R2 - STAINLESS STEEL BAND
S - #9 GA. WIRE TIES
T - ANGLE RING SUPPORT LUGS - SEE FIG. 295-7
X - CLIPS - SEE FIG. 295-8

NOTE: GLASS FABRIC MAY BE USE FOR MASTIC WEATHERPROOFING REINFORCEMENT.

FF 0039914

FIG. 295-4

VERTICAL VESSELS - BLOCK INSULATION WITH ALUMINUM WEATHERPROOFING ON SHELL & TOP HEAD. MASTIC WEATHERPROOFING ELSEWHERE.

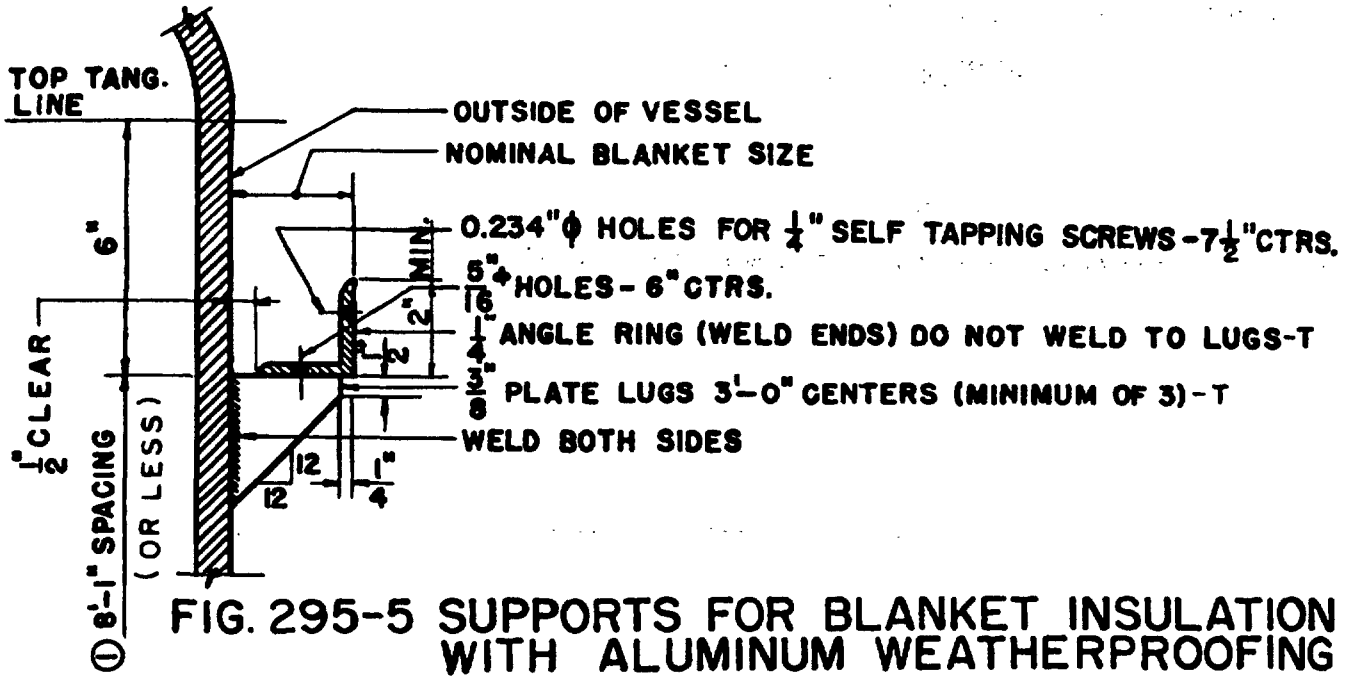

FIG. 295-5 SUPPORTS FOR BLANKET INSULATION WITH ALUMINUM WEATHERPROOFING

① THE BOTTOM OF ANY ANGLE RING SHOULD CLEAR THE TOP OF ANY NOZZLE OR OTHER PROJECTION BY ABOUT 6". ODD SPACING MAY BE USED TO ACCOMPLISH THIS.

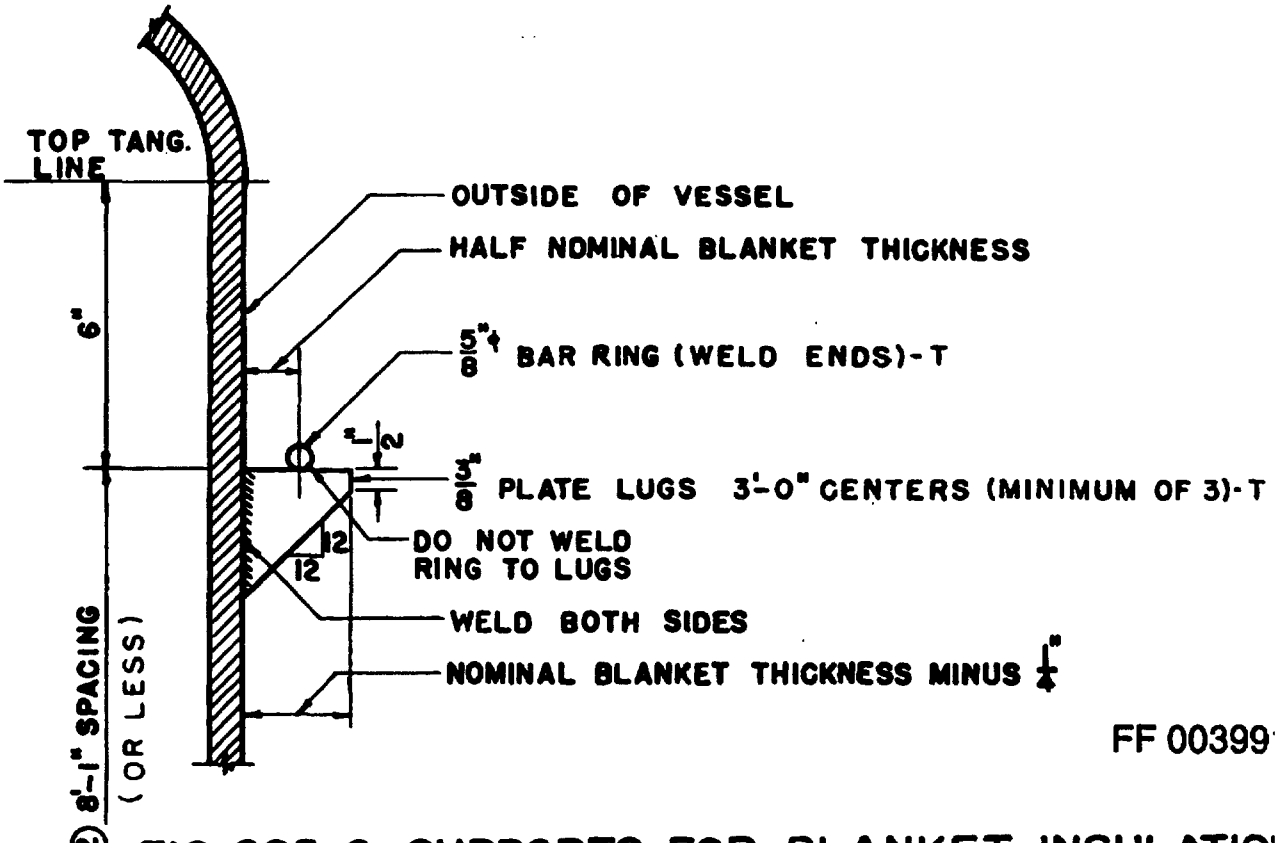

FF 00399

FIG. 295-6 SUPPORTS FOR BLANKET INSULATIOI WITH MASTIC WEATHERPROOFING

② WHEN A BAR RING OCCURS AT A NOZZLE OR OTHER PROJECTION IT SHALL BE BENT IN A U-SHAPE TO CLEAR UNDERSIDE OF

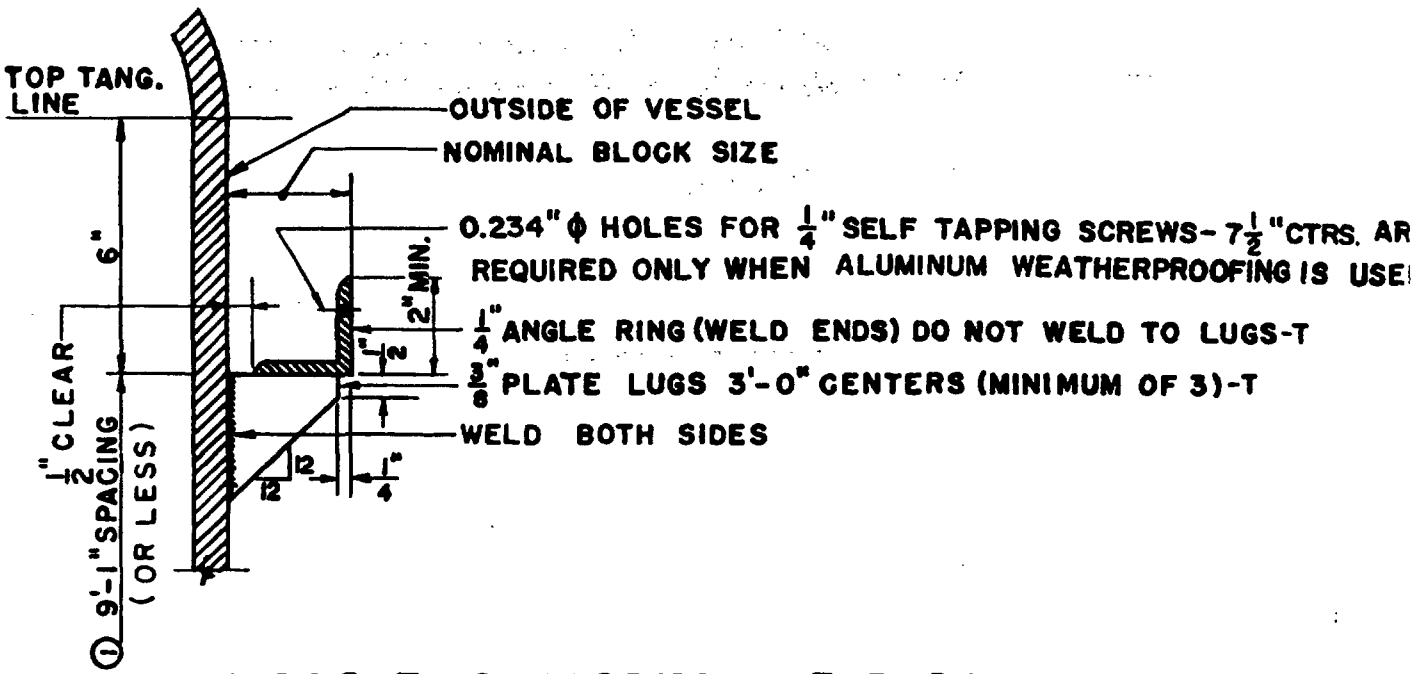

FIG. 295-7 SUPPORTS FOR BLOCK INSULATION

① THE BOTTOM OF ANY ANGLE RING SHOULD CLEAR THE TOP OF ANY NOZZLE OR OTHER PROJECTION BY ABOUT 6". ODD SPACING MAY BE USED TO ACCOMPLISH THIS.

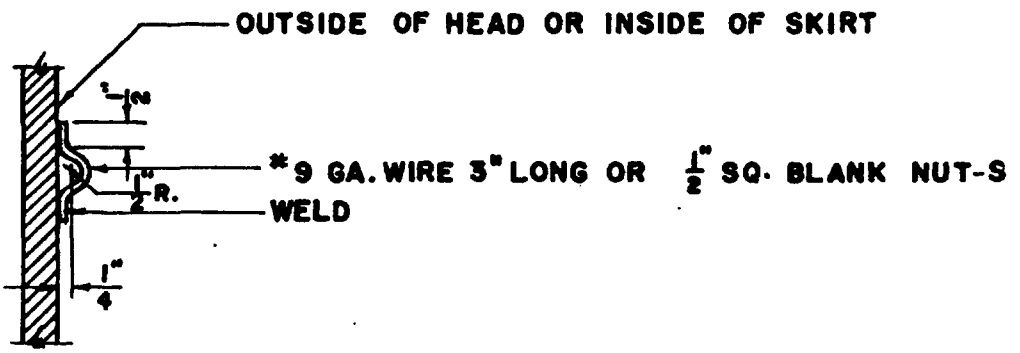

FIG. 295-8 CLIPS ON HEADS AND INSIDE OF SKIRT FOR BLANKET OR BLOCK INSULATION

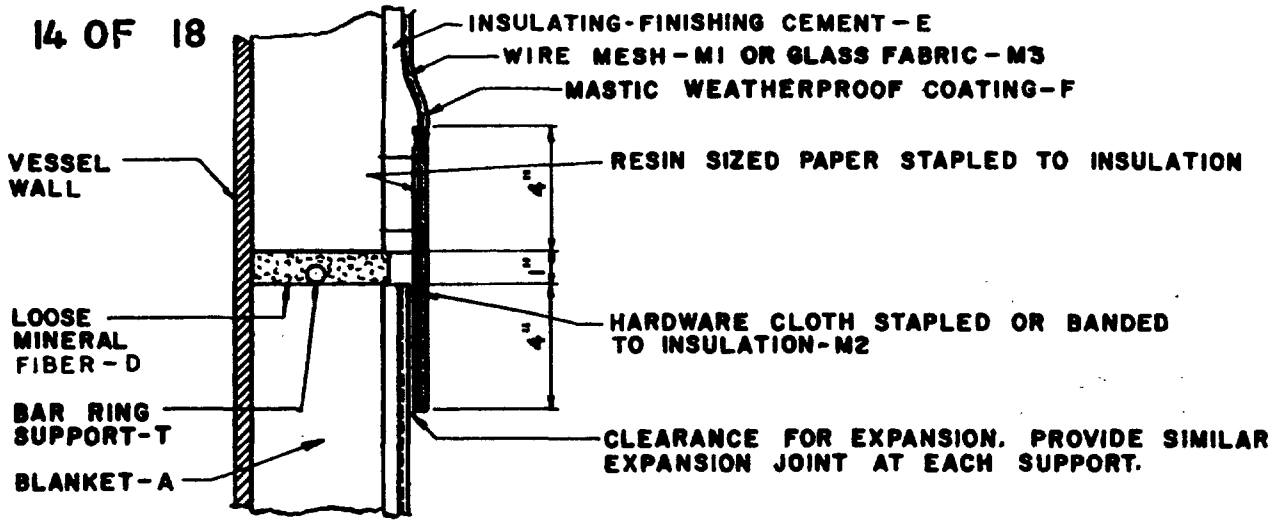

FIG. 295-9 EXPANSION JOINT-BLANKET INSULATION WITH MASTIC WEATHERPROOFING

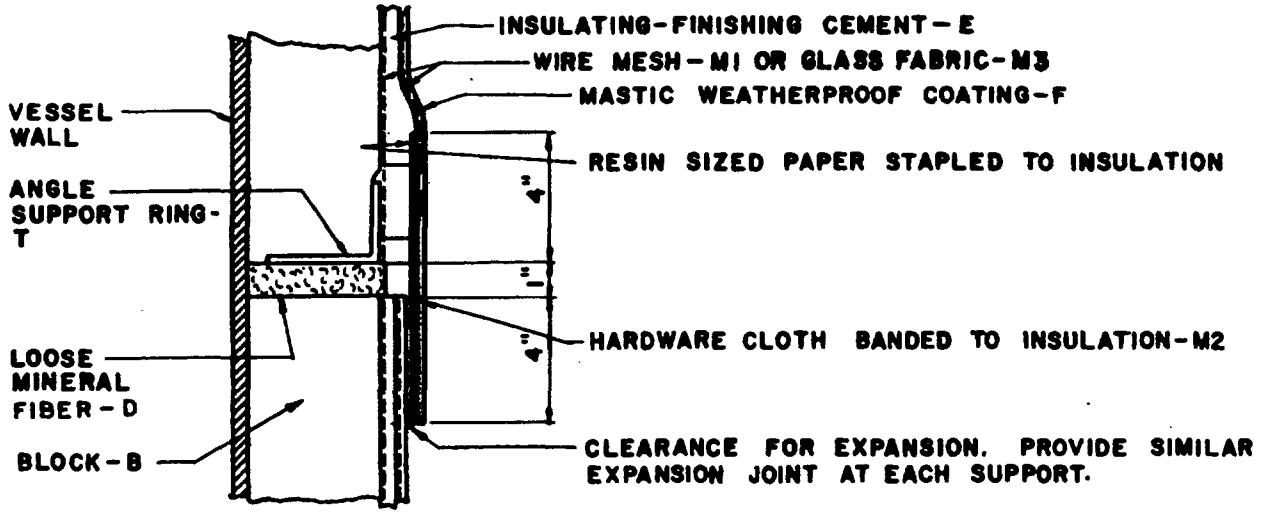

FIG. 295-10 EXPANSION JOINT-BLOCK INSULATION WITH MASTIC WEATHERPROOFING

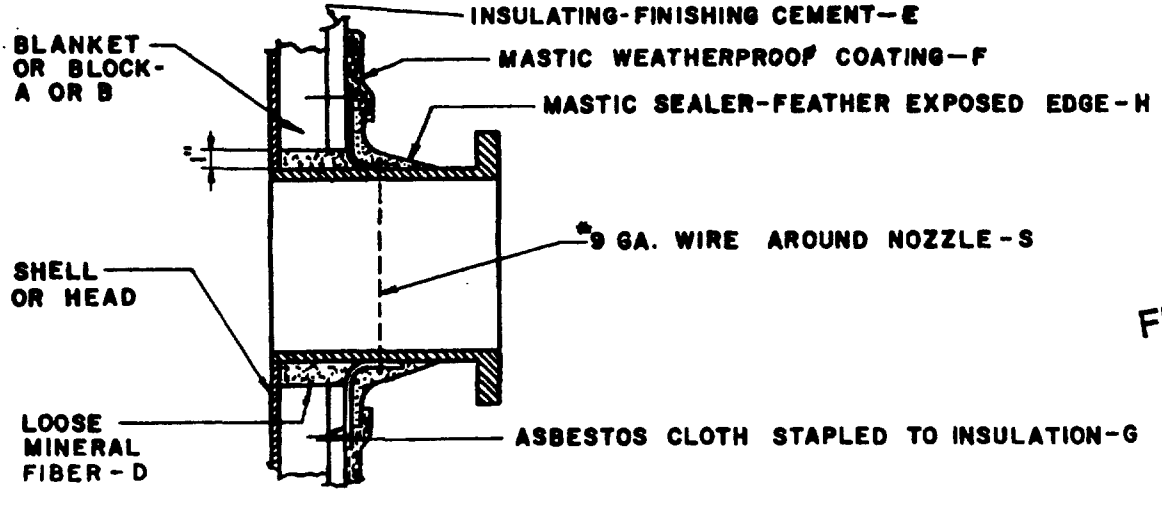

FF 0039917

FIG. 295-11 FLASHING AT NOZZLES OR OTHER PROJECTIONS-MASTIC WEATHERPROOFING

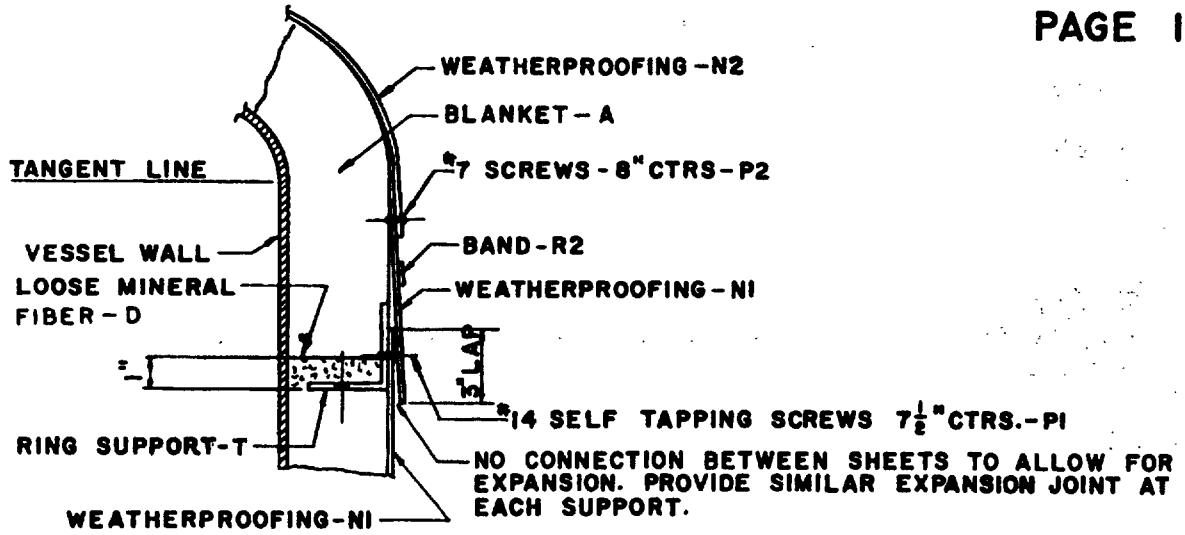

FIG. 295-12 EXPANSION JOINT-BLANKET INSULATION WITH ALUMINUM WEATHERPROOFING

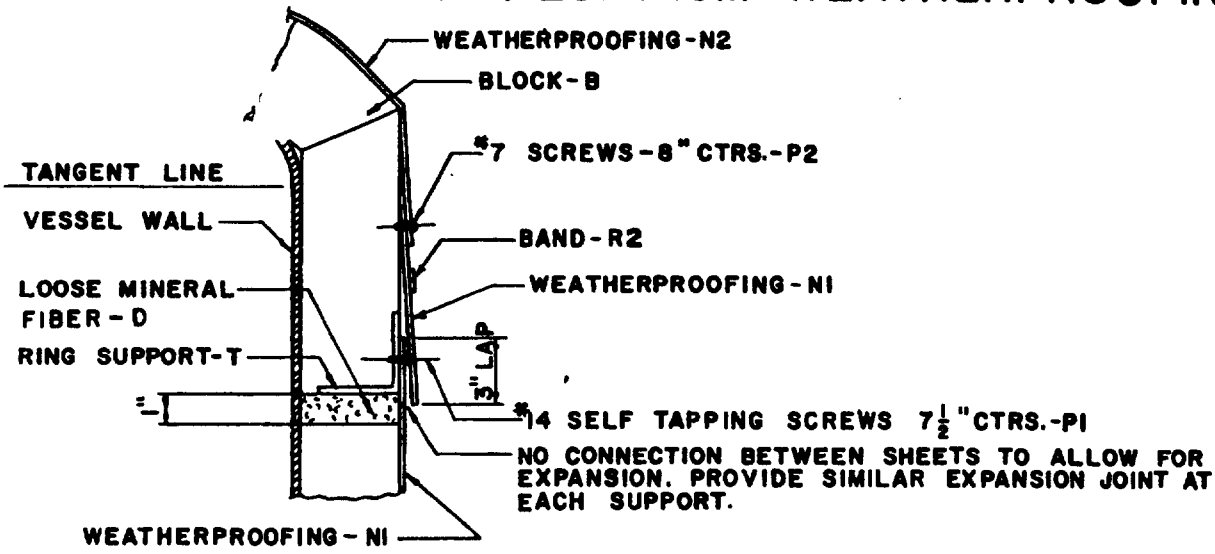

FIG. 295-13 EXPANSION JOINT-BLOCK INSULATION WITH ALUMINUM WEATHERPROOFING

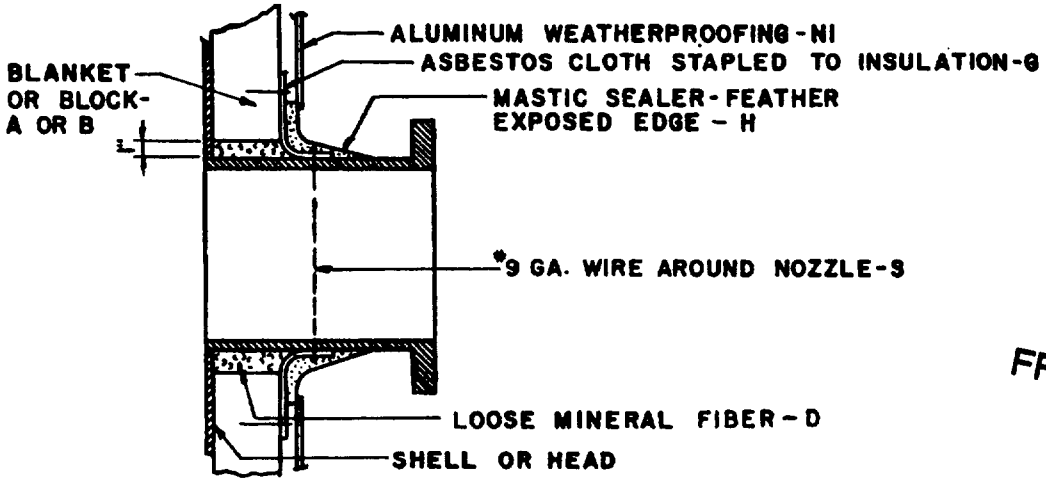

FF 0039918

FIG. 295-14 FLASHING AT NOZZLES OR OTHER PROJECTIONS-ALUMINUM WEATHERPROOFING

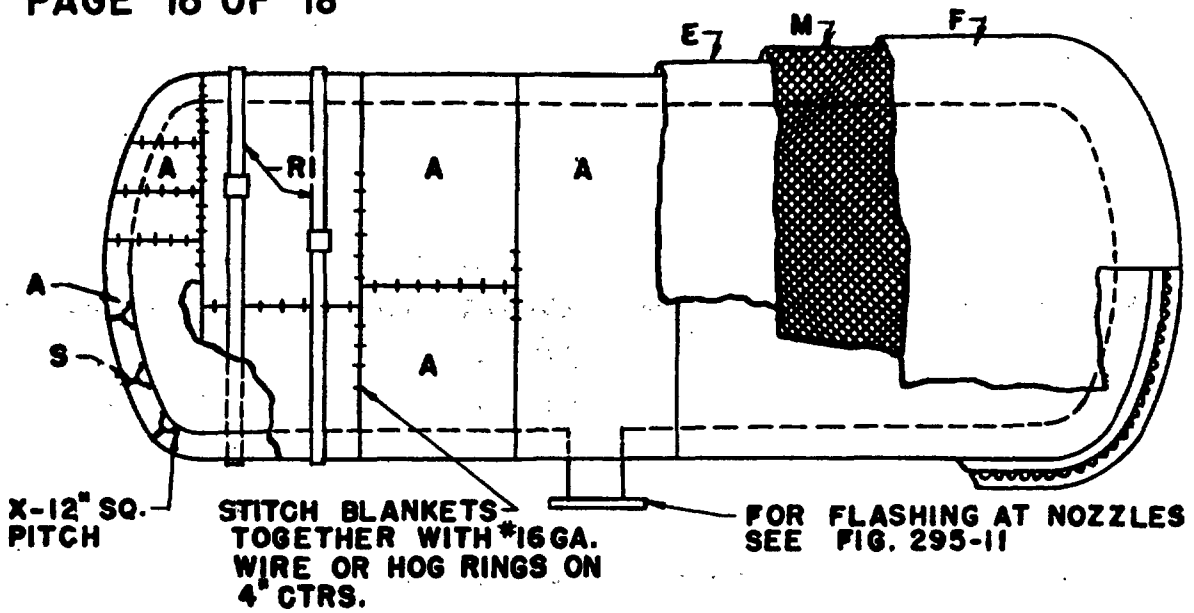

FIG. 295-15 BLANKET INSULATION WITH MASTIC WEATHERPROOFING

A - BLANKET INSULATION - LATH SIDE OUTWARD
E - INSULATING-FINISHING CEMENT 3/8" THICK
F - MASTIC WEATHERPROOF COATING 1/8" THICK WHEN DRY
J - LAP SEALER
M - WIRE MESH — LACE EDGES WITH #16 GA. WIRE(SEE NOTE)
N2 - CRIMPED ALUMINUM WEATHERPROOFING
P2 - SHEET METAL SCREWS WITH WASHERS
RI - GALVANIZED BANDS-9" CTRS.
R2 - BANDS-STAINLESS STEEL
S - #9 GA. WIRE TIES
X - CLIPS - SEE FIG. 295-8

NOTE: GLASS FABRIC MAY BE USED FOR MASTIC WEATHERPROOFING REINFORCEMENT.

HORIZONTAL VESSELS AND EXCHANGERS

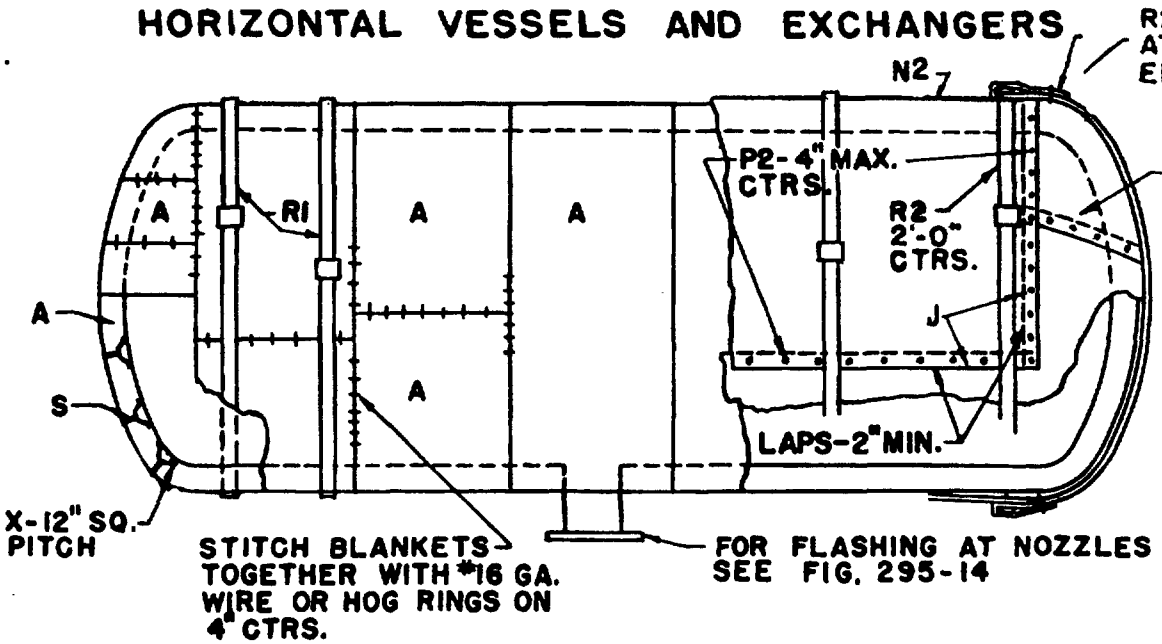

FF 0039919

FIG. 295-16 BLANKET INSULATION WITH ALUMINUM WEATHERPROOFING

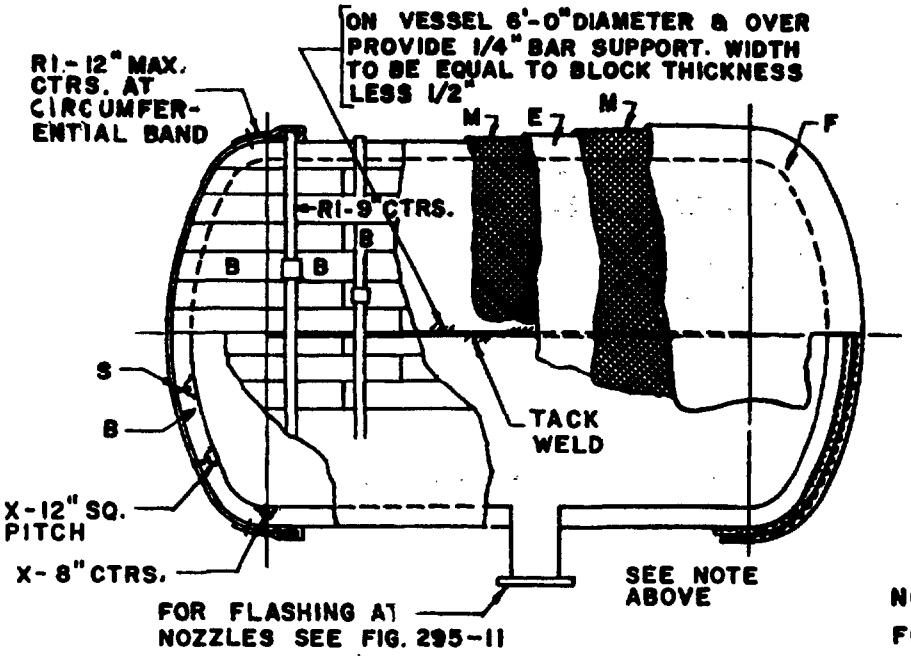

B - BLOCK INSULATION
E - INSULATING-FINISHING CEMENT 3/8" THICK
F - MASTIC WEATHERPROOF COATING - 1/8" THICK WHEN DRY.
J - LAP SEALER
M - WIRE MESH-LACE EDGE WITH #16 GA. WIRE (SEE
N2 - CRIMPED ALUMINUM WEATHERPROOFING
P2 - SHEET METAL SCREWS WITH WASHERS
R1 - GALVANIZED BANDS
R2 - BANDS-STAINLESS STE
S - #9 GA. WIRE TIES
X - CLIPS-SEE FIG. 295-8

NOTE: GLASS FABRIC ACCEP FOR MASTIC WEATHERPROOFI REINFORCEMENT

FIG. 295-17 BLOCK INSULATION WITH MASTIC WEATHERPROOFING

HORIZONTAL VESSELS AND EXCHANGERS

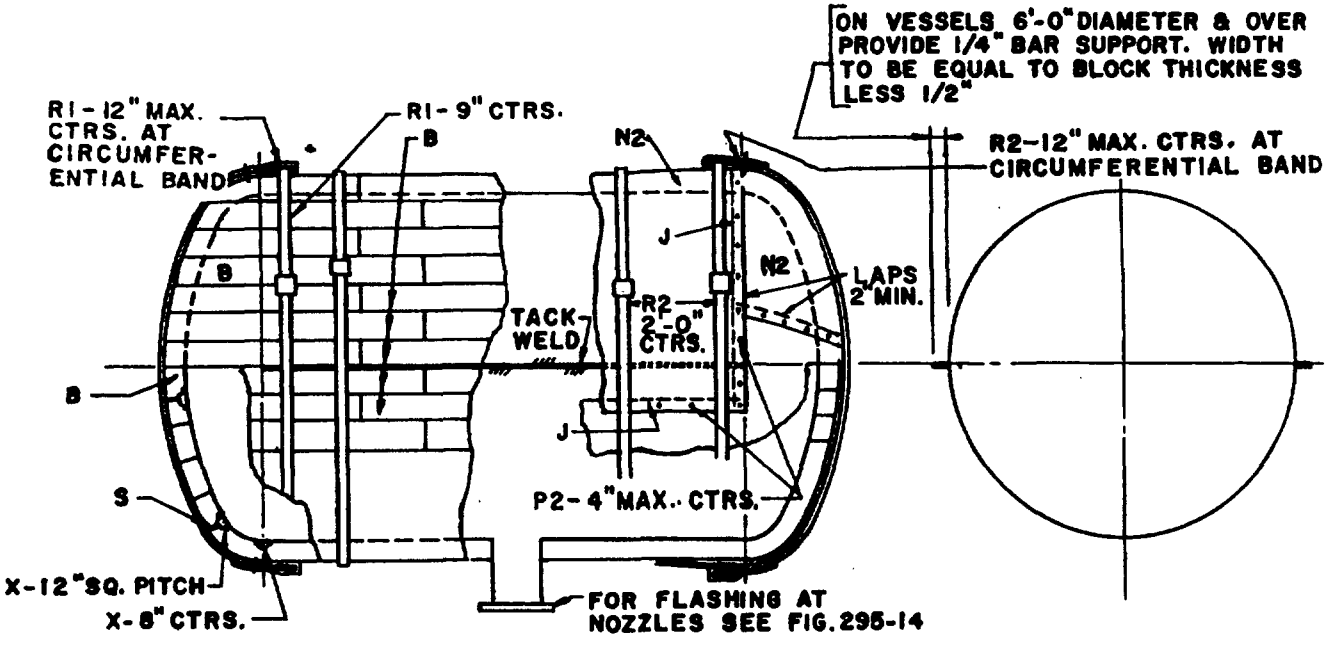

NOTE - POINT UP JOINTS AND BRUISES OF BLOCK INSULATION WITH INSULATING-FINISHING CEMENT.

FF 0039920

FIG. 295-18 BLOCK INSULATION WITH ALUMINUM WEATHERPROOFING

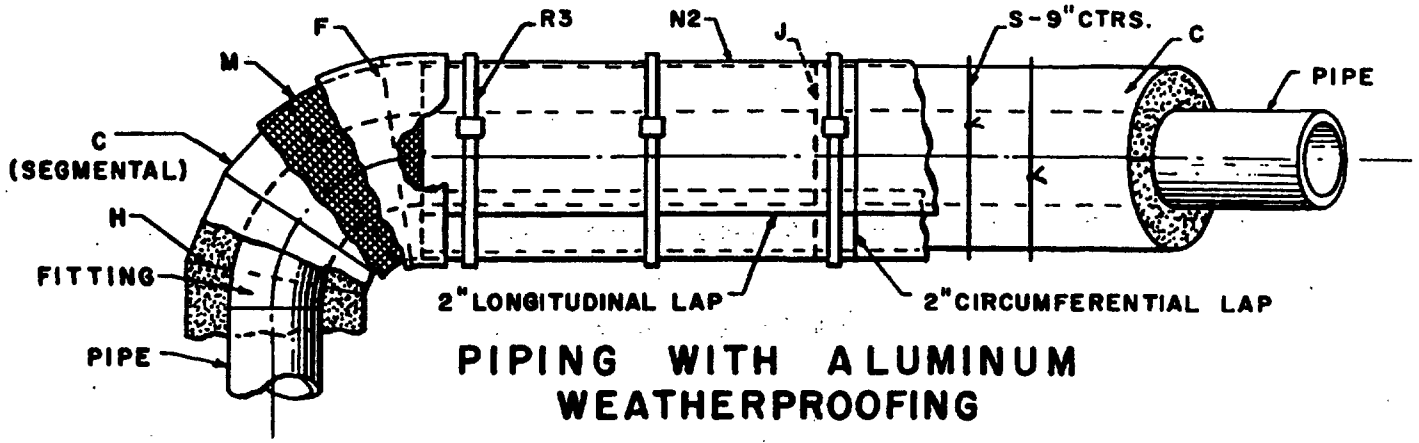

PIPING WITH ALUMINUM WEATHERPROOFING

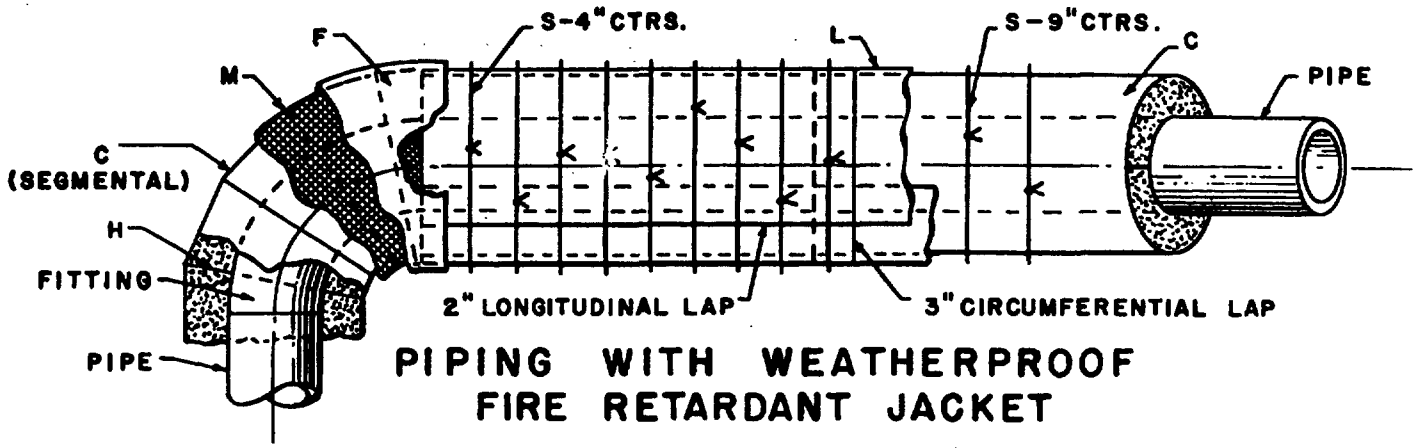

PIPING WITH WEATHERPROOF FIRE RETARDANT JACKET

C – PIPE INSULATION POINT UP JOINTS AND BRUISES WITH INSULATING-FINISHING CEMENT.

F – MASTIC WEATHERPROOF COATING.

H – MASTIC SEALER.

J – LAP SEALER.

L – WEATHERPROOFING – FIRE RETARDANT JACKET.

M – WIRE MESH OR GLASS FABRIC. APPLY OVER CEMENT.

N2– CRIMPED ALUMINUM WEATHERPROOFING

R3– ALUMINUM BANDS – ABOUT 17" CENTERS

S – #16 GAGE WIRE TIES.

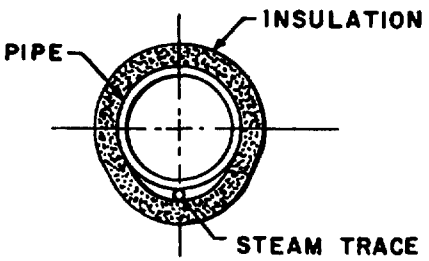

SECTION THROUGH STEAM TRACED INSULATED PIPING

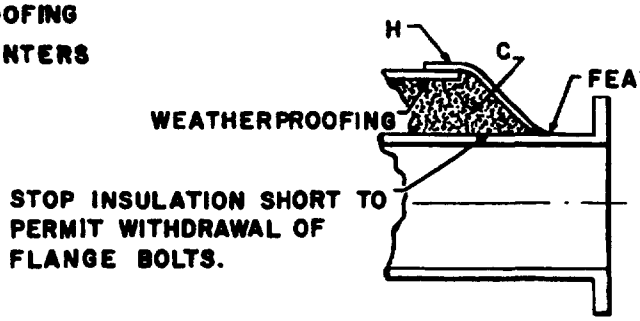

FF 003992

DETAIL AT UNINSULATED FLANGES

FIG. 295-19 DETAILS OF PIPE INSULATION.

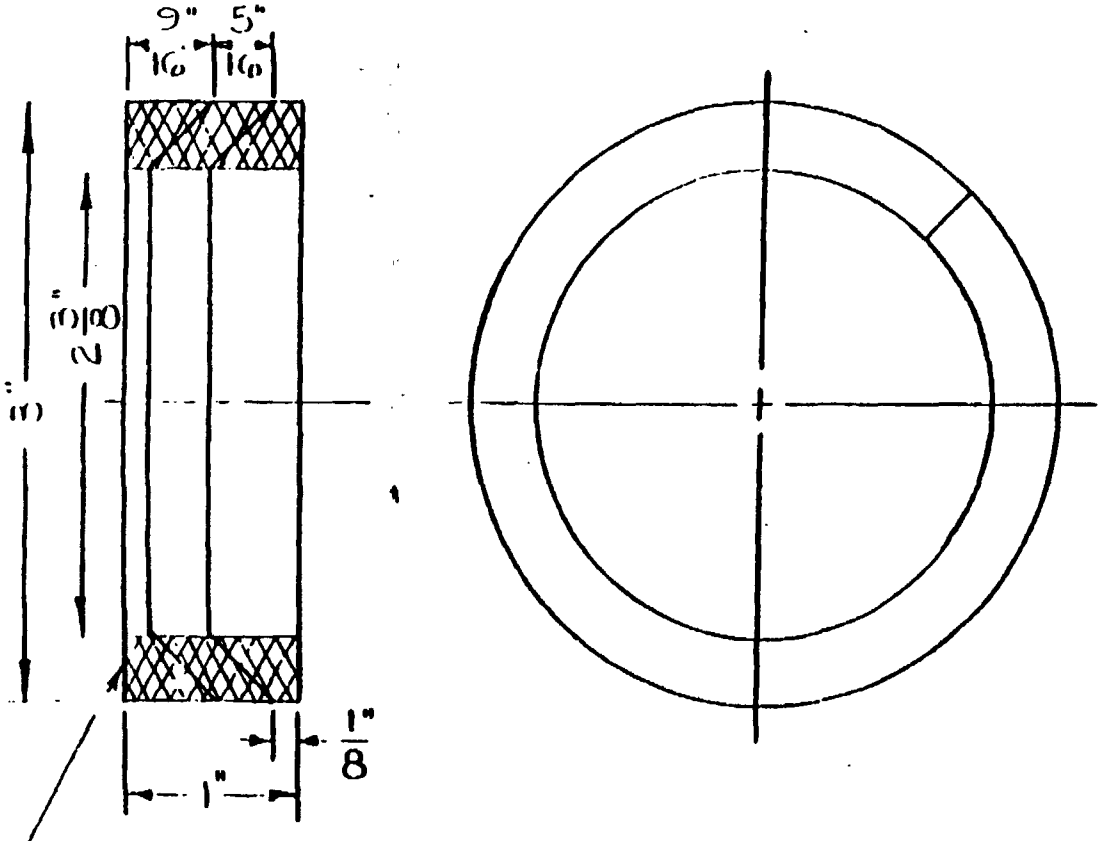

3 RINGS

SPECIFICATION ◇2

JOHN CRANE 187-IX BRAIDED ASBESTOS, WITH CORROSION INHIBITOR AND PARAFFIN DIP AND INCONEL WIRE INSERT AROUND RESILIENT DRY ASBESTOS CORE IMPREGNATED WITH GRAPHITE. WITH INHIBITOR IN CORE LUBRICATED THROUGHOUT AND COMPLETELY SURFACED WITH ANTIFRICTIONAL DRY GRAPHITE LUBRICANT.

◇1

REVISION

NO.	DESCRIPTION	DATE	REV. BY	CK'D BY
1	DELETED P-5 FROM TITLE PER ENG CHG 5123	7/23/71	C.	RL
2	RING IDENTITY NO'S. 187-IX WAS 187-1 AND ADDED "CORROSION INHIBITOR AND PARAFFIN DIP AND" TO SPECIFICATION. PER ENG. CHG. # 6463	2-21-81	G. S. C.	WRS

UNLESS OTHERWISE SPECIFIED
DIMENSIONS ARE IN INCHES
TOLERANCES ARE:

FRACTIONS	DECIMALS	ANGLES
± 1/64	± .005	± 2 1/2°

FF 0038621

BLAW-KNOX COMPANY
COPES-VULCAN DIVISION
ERIE, PENNSYLVANIA

FOR: PN-3 & DN-4 ROTARY HEAD EXT.

PACKING SET
FOR STEAM SERVICE

FOLIO

DRAWN G.S.	DATE 4-3-64	JOB NO.	
CHECKED [illegible]	DATE 4-14-64		
APPR.	DATE	SCALE 12" = 1'-0"	

ALL RIB RADII ARE 1/4"

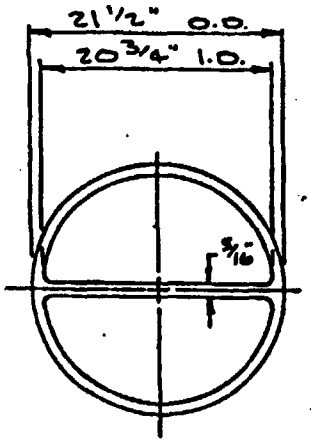

CHANNEL COVER GASKET

ONE REQ'D
1/8" THK. ARMCO IRON
JACKETED ASBESTOS
FILLED

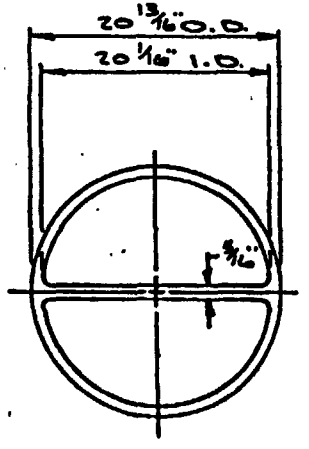

CHANNEL GASKET

ONE REQ'D
1/8" THK ARMCO IRON
JACKETED ASBESTOS
FILLED

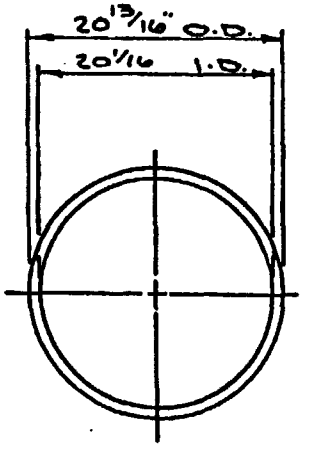

SHELL GASKET

ONE REQ'D
1/8" THK ARMCO IRON
JACKETED ASBESTOS
FILLED

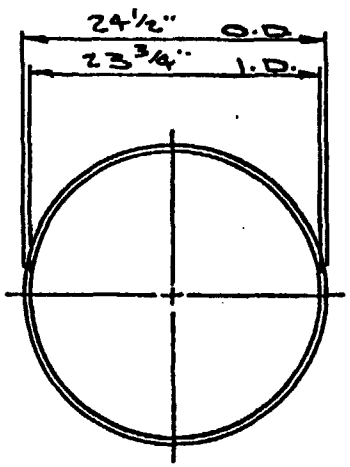

SHELL COVER GASKET

ONE REQ'D
1/8" THK ARMCO IRON
JACKETED ASBESTOS
FILLED

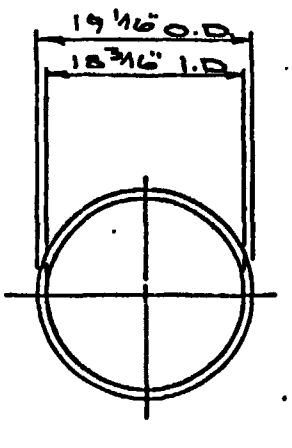

FLOATING HEAD GASKET

ONE REQ'D
1/16" THK ARMCO IRON
SOLID
(DEAD SOFT)
95 MAX BHN

FF 0033025

REQ'D AS NOTED FOR ONE SET

2-SETS REQ'D.

Energy Exchanger Co.
1644 No. Garnett Rd. • Tulsa, Okla. 74116

GASKET DETAILS

DATE 1-29-79 | DRAWN BY JS | DRAWING NUMBER | REV

INITIAL DATE | CHECK DATE | PROCESS | GATHER | REVISION

DELIVER MATERIAL TO: DEPT. | SHEET ____ OF ____

QTY. PER ASS'Y	TOTAL QTY. REQ'D	DESCRIPTION	PART NUMBER	MATERIAL / SPEC.	DWG. SIZE	DEPT. NO.	REQD	ORD.	PROM.	RECD	P.O. NO.	VENDOR	B/C	MAT'L STATUS
		[illegible]	[illegible]	[illegible]	B									
3		PIPE PLUG 3/4" P.T.	2-135-5-96-901-05	STL	A									
96		HEX NUT 5/8"-11TPI	2-122-5-00-902-07	STL	A									
		STUD [illegible] LG	2-012 [illegible]	ALLOY STL	A									
24		STUDBOLT-5/8"-11TPI×4" LG	2-012-5-10-901-16	ALLOY STL	A									
12		STUDBOLT 5/8"-11TPI×4 1/2 LG	2-012-5-10-901-18	ALLOY STL.	A									
12		STUDBOLT-5/8"-11TPI×4 3/4" LG	2-012-5-10-901-19	ALLOY STL.	A									
1		LANTERN RING	3-338-8-00-901-10	NYLON	A									
2		PACKING RING	3-359-8-00-901-10	NEOPRENE	A									
[illegible]		GASKET	[illegible]	[illegible]	A									
[illegible]		[illegible]	[illegible]	ASBESTOS	A									
2		GASKET	3-298-8-00-901-10	ASBESTOS	A									
2		GASKET	3-299-8-00-901-10	ASBESTOS	A									
2		CRADLE	4-540-10-302400 11	CAST IRON	A									
2.		COVER	3-219-5-15-901-10	STL.	A									
1		CHANNEL (PK'D)	4-321-10-815-001	STL	A									
1		CHANNEL (STA.)	4-305-10-215-027	STL.	A									
1		BUNDLE SUB-ASS'Y	4-116-10-072-001		B									
1		SHELL SUB-ASS'Y	4-600-10-072-030	STL.	B									

TO PURCH. ____ DUE ____ TO TAB ____ SCHED. ____

TEST REPORTS YES NO
GOV'T NO ____
NOBS NO ____
PRIORITY ____
GOV'T INSP. YES NO

MADE BY ____ DATE 2-5-75 CK. ____

SIZE B | PART NUMBER 5-046-10-072-042 | REV.

FF 0026376

HEAT EXCHANGER SPECIFICATION SHEET

Customer: PONTIAC REFINING CORP.			Date: 10-3-66 Revi
Plant Location: HYDRAR PROCESS UNIT			Year Built: 1964
Manufacturer: DISLER ENGINEERING CORP.			Installed: 1964
Service of Unit Reactor Preheater			Serial No: 4528-2
			Item No: HR-E5
Size: 12-183	Type: BEU		Connected in:
Sq. Ft. per Unit: 233	Shells per Unit: 1		Sq.Ft./Shell: 233

PERFORMANCE OF ONE UNIT

	Shell Side	Tube Side
Fluid Circulated:	Comb.Feed & 64.6 Mol.% H_2	Super-heated Steam
Total Fluid Entering:	12,553 lb/hr.	3760 lb./hr.
Vapor	10,847 lb./hr.	
Liquid	1,706 lb/hr.	3,760 lb/hr.
Steam		
Non Condensables		
Fluid Vaporized or Condensed:	Vapor 1,706 lb/hr.	Cond. 3,760 lb./hr.
Steam Condensed:		
Gravity:	0.747 lb/CF @ 141°F	@ °F
Viscosity:	0.011 Cp @ 141°F	@ °F
Molecular Weight:	9.6	
Specific Heat:	BTU # °F	BTU # °F
Latent Heat Vapors:	BTU #	BTU #
Temperature In:	100 °F	409 °F
Temperature Out:	360 °F	409 °F
Operating Pressure:	470 #/Sq.In.	260 #/Sq.In.
Number of Passes:	1	2
Velocity:	Ft./Sec.	Ft./Sec.
Pressure Drop:	5 #/Sq.In.	Nil # Sc.In.
Fouling:	.0015	.0005

Heat Exchanged:- BTU/Hr. 3,330,000 M.T.D. Corr. 147.0 °F

Transfer Rate:- Service 97.5 Clean

CONSTRUCTION

Design Pressure:	600 #/Sq.In.	300 #/Sq.In.	
Test Pressure:	900 #Sq.In.	450 #/Sq.In.	
Design Temperature:	500 °F	550 °F	
Tubes: Steel U-Tubes A-214	No. 38 OD 3/4" BWG 14	Length 15'3" Pitch 15/16	
Shell: Steel	ID 11-3/4 OD 12-3/4"	Thickness 1/2"	
Shell Cover: Steel		Fltg.Head Cover None	
Channel: Steel		Channel Cover Integral	
Tube Sheets:- Stationary Steel A-212-B		Floating None	
Baffles:- Cross Steel	Type Sebmental	Thickness 3/16"	
Baffle:- Long	Type	Thickness	
Tube Supports:		Thickness	
Gaskets: Metal Jacketed Asbestos			
Connections: Shell - In 8" Out 8"		Series 300 lb. RTJ	
Channel - In 3" Out 2"		Series 300 lb. RF	
Corrosion Allowance:- Shell Side 1/8"		Tube Side 1/8"	
Code Requirements: ASME - Stamped & TEMA "R"			
Weights:- Each Shell 2,800 lb.	Bundle 1,100 lb.	Full of Water 4,000	

REMARKS:

Revision No. 1

HEK

FF 0024770

HEAT EXCHANGER SPECIFICATION SHEET

016-E-004

Customer: PONTIAC REFINING CORP.		Date: 5-30-67
Plant Location: UNIFINING PROCESS UNIT		Year Built: 1958
Manufacturer: KRUEGER ENGINEERING & MFG. CO.		Installed: 1958
Service of Unit DEPENTANIZER CONDENSER		Serial No: 57-122
		Item No: HE-4
Size: 29 x 192	Type: Floating Head	Connected in:
Sq. Ft. per Unit: 1630	Shells per Unit: 1	Sq.Ft./Shell: 1630

PERFORMANCE OF ONE UNIT

	Shell Side	Tube Side
Fluid Circulated:	Hydrocarbon Vapors	Cooling Water
Total Fluid Entering:	31,150 lb/hr.	489,000 lb/hr. - 97
Vapor	31,150 lb/hr. 62 MW	
Liquid		489,000 lb/hr. 978
Steam		
Non Condensables		
Fluid Vaporized or Condensed:	Cond. 30,670 lb/hr. 63.5 MW	
Steam Condensed:		
Gravity:	104 API @ 160 °F	.99 @ 100 °F
Viscosity:	@ °F	.68 Cp @ 100 °F
Molecular Weight:	Vapor In 62 MW	18
Specific Heat:	BTU # °F	1.00 BTU #100°F
Latent Heat Vapors:	BTU #	BTU #
Temperature In:	220 °F	87 °F
Temperature Out:	100 °F	100 °F
Operating Pressure:	135 #/Sq.In.	35 #/Sq.In.
Number of Passes:	1	2
Velocity:	Ft./Sec.	3.94 Ft./Sec.
Pressure Drop:	5 #/Sq.In.	10 # Sq.In.
Fouling:	.001	.002

Heat Exchanged:- BTU/Hr. 6,350,000	M...D. Corr.	40.4	°F
Transfer Rate:- Service 96.4	Clean	136	

CONSTRUCTION

Design Pressure:	300 #/Sq.In.	75 #/Sq.In.
Test Pressure:	450 #Sq.In.	115 #/Sq.In.
Design Temperature:	350 °F	250 °F

Tubes: B-111 Inh. Adm.	No. 526 OD 3/4" BWG 16	Length 16'0" Pitch Lin.	
Shell: A-212 BFB Carbon Steel	ID 29" OD 30"	Thickness 1/2"	
Shell Cover: A-212-BFB Carbon Steel		Fltg. Head Cover A-9	
Channel: A-212 BFB Carbon Steel		Channel Cover A-201A F	
Tube Sheets:- Stationary B-171 N.R. Brass		Floating B-171	
Baffles:- Cross B-171	Type Segmental	Thickness 1/4"	
Baffle:- Long	Type	Thickness	
Tube Supports: B-171 M. R. Brass		Thickness 3/4:	
Gaskets: 1/8" THK Armco Armored Asbestos			
Connections: Shell - In 6"	Out 4"	Series 300 lb. RF	
Channel - In 8"	Out 8"	Series 150 lb. FF	
Corrosion Allowance:- Shell Side	1/8"	Tube Side 1/8"	
Code Requirements: ASME & TEMA "R"			
Weights:- Each Shell 15,200 lb.	Bundle 8300 lb.	Full of Water 21.1	

REMARKS:

FF 0017380

HEAT EXCHANGER SPECIFICATION SHEET

016-E-006

Customer: PONTIAC REFINING CORP.			Date: 5-30-67
Plant Location: CRUDE OIL PROCESS UNIT			Year Built: 19
Manufacturer: KRUEGER ENGINEERING & MFG. CO.			Installed: 19
Service of Unit SPLITTER CONDENSER			Serial No: 57-124
			Item No: HE-6
Size: 39x192	Type: Floating Head		Connected in:
Sq. Ft. per Unit: 3060	Shells per Unit: 1		Sq.Ft./Shell: 3060

PERFORMANCE OF ONE UNIT

	Shell Side	Tube Side
Fluid Circulated:	Light Hydrocarbon Vapors	Cooling Water
Total Fluid Entering:	36,330 lb/hr.	500,000 lb/hr. 100
Vapor	36,300 lb.hr.	
Liquid		500,000 lb/hr. 100
Steam		
Non Condensables		
Fluid Vaporized or Condensed:	Cond. 36,330 lb/hr.	
Steam Condensed:		
Gravity:	Liq. 87 API @ 100 °F	.99 @ 100 °F
Viscosity:	@ °F	.68 Cp. @ 100 °F
Molecular Weight:	61.4	18
Specific Heat:	BTU # °F	1.00 BTU # 100 °F
Latent Heat Vapors:	BTU #	BTU #
Temperature In:	160 °F	°F
Temperature Out:	100 °F	°F
Operating Pressure:	2 #/Sq.In.	35 #/Sq.In.
Number of Passes:	1	4
Velocity:	Ft./Sec.	4.32 Ft./Sec.
Pressure Drop:	2 #/Sq.In.	10 # Sq.In.
Fouling:	.001	.002

Heat Exchanged:- BTU/Hr 6,360,000		M.T.D. Corr.	22.6 °F
Transfer Rate:- Service	95	Clean	134

CONSTRUCTION

Design Pressure:	75 #/Sq.In.	75 #/Sq.In.
Test Pressure:	115 #Sq.In.	115 #/Sq.In.
Design Temperature:	300 °F	250 °F
Tubes: B-111 AIN. ADM.	No. 982 OD 3/4" BWG 16	Length 16'0" Pitch 1 in.
Shell: A-212 B FB Carbon Steel	ID 39" OD 40"	Thickness 1/2"
Shell Cover: A-212 B FB Carbon Steel		Flg.Head Cover A-21
Channel: A-285-C FB Carbon Steel		Channel Cover A-201-
Tube Sheets:- Stationary B-171 N.R. Brass		Floating B-171 NRBra
Baffles:- Cross B-171 N.R.Bra Type Segmental		Thickness 1/4"
Baffle:- Long Type		Thickness
Tube Supports: B-171 N.R. Brass		Thickness 1/2"
Gaskets: 1/8" THK. Armco Armored Asbestos		
Connections: Shell - In 10" Out 4"		Series 150 lb. RF
Channel - In 6" Out 8"		Series 150 lb. FF
Corrosion Allowance:- Shell Side 1/8"		Tube Side 1/8"
Code Requirements: ASME & TEMA "R"		
Weights:- Each Shell 24,900 lb.	Bundle 13,440 lb.	Full of Water 33,2

REMARKS:
HEK

FF 0017386

REV.	SIZE	ITEM CODE	ITEM NAME	X	NOTE NO.	DESCRIPTION	REFERENCE
0							
0						***** GASKETS *****	
0							
0						1/16" THICK - JM 60 (500 DEG F & BELOW)	
0							
0	1/2-24	0665422	GAS			GASKET 150# ASBESTOS RING 1/16" THK	JM#60
0	1/2-24	0665447	GASFR	B		GASKET 300# ASBESTOS RING 1/16" THK	JM#60
0	30 -48	0665614	GAS			GASKET API-605 150# ASB RING 1/16" THK	JM#60
0						API-605 DIMENSIONS (CHECK MATCHING EQPT)	
0							
2						1/8" THICK - FLEXITALLIC CG 304 SS	
0						(501 DEG F & ABOVE)	
0							
2	1/2-24	0671475	GAS150	B		GASKET 150# 304 SS SPIRAL WOUND ASBESTOS	FLEXITALLIC CG
2	1/2-24	0671509	GAS300	B		GASKET 300# 304SS SPIRAL WOUND ASBESTOS	FLEXITALLIC CG
2	30 -48	0671663	GAS150	B		GASKET API 150# 304SS SPIRAL WOUND ASBES	FLEXITALLIC CG
0						API-605 DIMENSIONS (CHECK MATCHING EQPT)	
0							
0						***** BOLTING *****	
0							
0		0675648	BOL			STUD-BOLT A193 GR B7 W/A194 GR 2H NUTS	
0		0675649	BOLCPS	B		CAP SCREW HEX HEAD CR-MO A193 GR B7 UNC	
0		0675651	BOLCPS	B		CAP SCREW HEX HEAD CR-MO A193 GR B7 MIN	
0							
0						***** STRAINERS *****	
0							
0	1/2- 2	0762351	STR			Y-STRAINER 600# SW STL,316 SCR W/.033 PR	LESLIE 7209-WCB
0							
0						***** SPECTACLE BLINDS *****	
0							
0						FIGURE 8 TYPE, ANS B16.5 DEMENSIONS	
0							
0	1/2-24	0749502	SPE			BLIND SPECTACLE 150# RF/FF STL	AITKEN INC.
0							
0							
0						

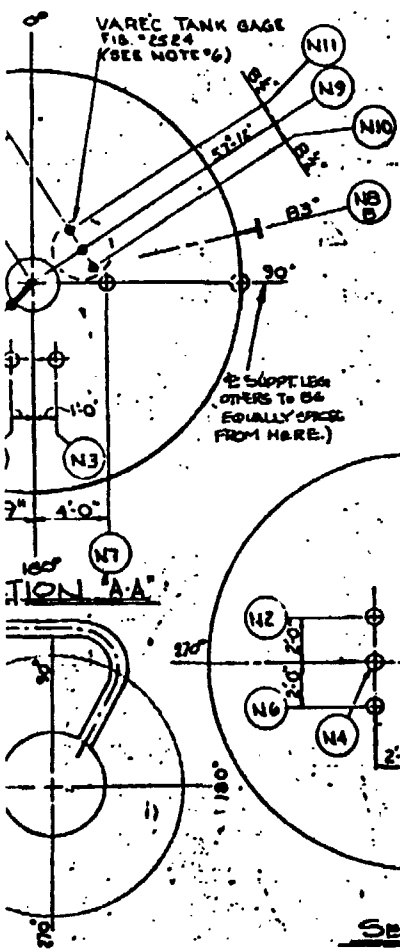

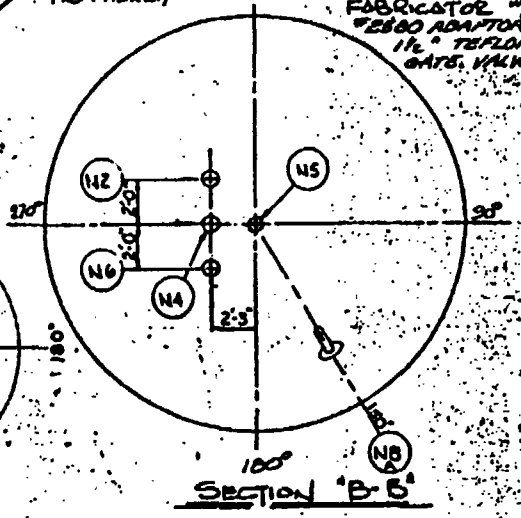

THE DESIGN DATA IS APPLICABLE UNLESS SPECIFIED OTHERWISE IN NOTES OR DETAILS.

NOTES:
1. VESSEL FABRICATOR SHALL FURNISH AND INSTALL ALL PARTS UNLESS SPECIFIED OTHERWISE.
2. FABRICATOR TO FURNISH SPIRAL GRATING STAIRWAY & HANDRAIL @ THE TOP (GALVANIZED)
3. FABRICATOR TO MAGNETIC PARTICLE INSPECT ALL NOZZLES & MANWAYS AFTER SHOP OR FIELD WELDING.
4. FABRICATOR TO SPECIFY MAX. EXTERNAL PRESSURE OF THE SPHERE @ 300° F.
5. SPECIFIC GRAVITY OF LIQUID STORED: 0.55/0.57
6. A VAREC TANK GAUGE TO BE FURNISHED & INSTALLED BY FABRICATOR W/ VAREC #2880 ADAPTOR KIT & 1½" TEFLON PLUG GATE VALVE (FIG. 275).

DESIGN DATA

1. DESIGN BASIS: SP–	& ASME VIII DIV.
2. STAMPING REQUIREMENTS: YES	
3. SPECS: SP. 42.1, 42.2, 2A, 2G, 42.7	
4. DESIGN PRESSURE: 100 PSIG, TEMP. 132	°F
5. OPER. PRESSURE: 40 PSIG, TEMP. 80	°F
6. POSTWELD HEAT TREATMENT @ PER CODE	HOURS
7. WELD EXAMINATION: 100% PER FAB	
8. JOINT EFFICIENCY: SHELL 100% PER FAB %, HEADS —	%
9. NOMINAL CORROSION ALLOWANCE: SHELL 1/16" HEADS NOZZLE NECKS 1/16"	
10. M.A.W.P. @ DESIGN TEMP. PER CODE	PSIG
11. BASIS FOR CALCULATED TEST PRESS. SHOP/FIELD TEST LIMITED BY: PER CODE	PSIG
12. HYDRO-TEST PRESS. SHOP PER CODE FIELD PER CODE	PSIG
13. MATERIAL SPECIFICATIONS:	
(a) SHELL SA-516-70	
(b) HEADS	
(c) ~~FLANGES/FORGINGS~~	
(d) NOZZLE NECKS & PIPE SA-106-B	
(e) FLANGES (EXTERNAL) SA-105 PER FAB	
(f) COUPLINGS (SCREWED/SOCKET-WELDED) SA-181-1	
(g) GASKETS 1/16" THK. ASBESTOS - JM #60 OR EQUAL	
(h) BOLTING (EXTERNAL) SA-193-B7/SA-194-2H	
(i) INTERNALS C.S.	
(k) SUPPORTS C.S.	
(l) EXTERNAL APPURTENANCES C.S.	
14. M.H./REINF. FURNISH W/ (RAISED/FLAT FACE) COVER, STUDS & GASKET	
15. PAINT PER SP- 647820-80S (BY FAB.)	

16. INSULATION (BY OTHERS) HOT/COLD NONE	NO. OF LAYERS	TOTAL THK.

17. FIREPROOFING (BY OTHERS) LEGS	THK.	MATL.	SQ. FT.	CU. FT.

18. INSPECTION BY CLIENT/FLUOR

CONNECTION SCHEDULE

MARK	NO. REQD	SIZE	RATING	FACING	DESCRIPTION
N-1	1	6"	150	RF	R.S.V.
N-2	1	2"			BYPASS / PUMP RELIEF
N-3	1	6"			VENT
N-4	1	8"			FILL
N-5	1	5"			DRAIN
N-6	1	10"			PUMP SUCTION
N-7	1	1½"			P.I.
N-8 (A,B)	3	1½"			T.W.T.I.
N-9	1	1½"			L.T. L.I.
N-10	1	1½"			L.T. L.I.
N-11	1	1½"			L.T. L.I.
N-12	1	8"	150	RF	VAPOR
M-1	1	20"	150	RF	MANWAY

NOZZLE PROJECTIONS ARE FROM ℄ OF VESSEL TO EXTREME FACE OF FLANGE EXCEPT AS NOTED:
FOR & SMALLER
FOR TO INCLUSIVE
FOR & LARGER

ESTIMATED VESSEL WEIGHTS
FABRICATED BY FABRICATOR LB.
EMPTY (LESS OPER. LIQUID) LB.
OPERATING LB.
FULL OF WATER LB.

PROCESS ENGR. APP. RJ Lemmon DATE 9/3/1975
INSTRUMENT ENGR. APP. [illegible] DATE 9/5/75
INSTRUMENT APPROVAL CONSISTS OF CHECKING SIZE & ELEV. OF INSTRUMENT CONNECTIONS.
PURCHASE ORDER NO. 647820-4-0107
FABRICATOR C.O.I. (172)

				00-2-4001	MANWAY DAVIT DETAILS
DRAWN	CHECK	APP.	DRAWING NO.	REFERENCE DRAWING – CONTRACT NO. 647820	

FLUOR

DRAWN BY: M. HORTENSTINE
CHECKED BY: RW 8/27/75
SUPERVISOR — RELEASE DATE
SUPERVISING ENGR. J.B. LAVAS — INITIALS JBL
PROJECT ENGR. G. MOSKO — APP. DATE 9/9/75
CLIENT — APP. DATE

130-BUTANE/N-BUTANE STORAGE & BB-TK-2
NEW LIGHT-ENDS STORAGE FACILITIES
HIGH SULFUR CRUDE FACILITIES
CHAMPLIN PETROLEUM CO. CORPUS CHRISTI, TEX

SCALE NONE | DRAWING NUMBER 647820-BB-2-402 | REVISION 5

M 0012717

FORM C-275 REV. 4/74

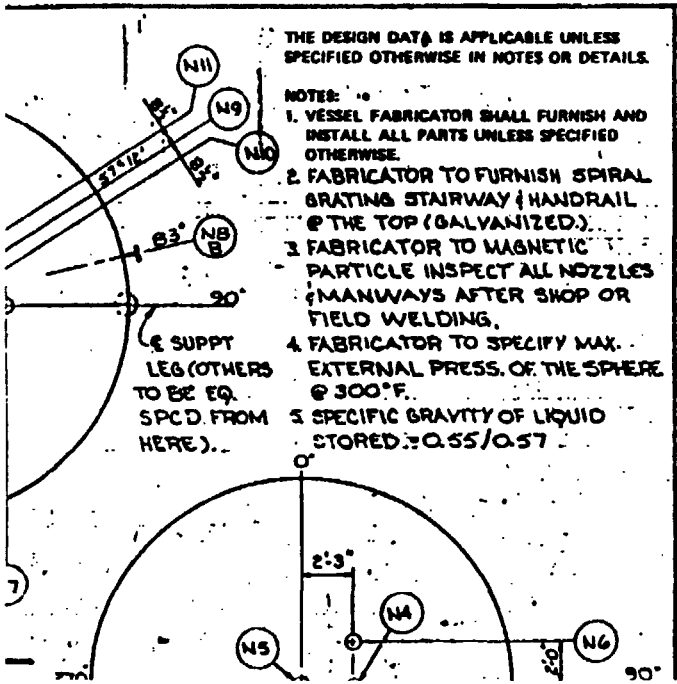

THE DESIGN DATA IS APPLICABLE UNLESS SPECIFIED OTHERWISE IN NOTES OR DETAILS.

NOTES:

1. VESSEL FABRICATOR SHALL FURNISH AND INSTALL ALL PARTS UNLESS SPECIFIED OTHERWISE.
2. FABRICATOR TO FURNISH SPIRAL GRATING STAIRWAY & HANDRAIL @ THE TOP (GALVANIZED).
3. FABRICATOR TO MAGNETIC PARTICLE INSPECT ALL NOZZLES & MANWAYS AFTER SHOP OR FIELD WELDING.
4. FABRICATOR TO SPECIFY MAX. EXTERNAL PRESS. OF THE SPHERE @ 300°F.
5. SPECIFIC GRAVITY OF LIQUID STORED = 0.55/0.57

DESIGN DATA

1. DESIGN BASIS: SP–	& ASME VIII DIV.
2. STAMPING REQUIREMENTS:	YES
3. SPECS: SP.	42.1, 42.2, 42.2A, 4220 & 42.7
4. DESIGN PRESSURE:	100 PSIG, TEMP. 132 °F
5. OPER. PRESSURE:	40 PSIG, TEMP. 80 °F
6. POSTWELD HEAT TREATMENT @	PER CODE °F HOURS
7. WELD EXAMINATION:	100 %
8. JOINT EFFICIENCY: SHELL	100 %, HEADS %
9. NOMINAL CORROSION ALLOWANCE: SHELL	1/16" HEADS NOZZLE NECKS 1/16"
10. M.A.W.P. @ DESIGN TEMP.	PER CODE PSIG
11. BASIS FOR CALCULATED TEST PRESS. SHOP/FIELD TEST LIMITED BY:	PER CODE PSIG
12. HYDRO-TEST PRESS. SHOP	— PSIG FIELD PER CODE PSIG
13. MATERIAL SPECIFICATIONS:	
(a) SHELL	SA-516-70
(b) HEADS	
(c) LINING/CLADDING	
(d) NOZZLE NECKS & PIPE	SA-106-B
(e) FLANGES (EXTERNAL)	SA-105
(f) COUPLINGS (SCREWED/[redacted])	SA-181-1
(g) GASKETS	1/16" THK. ASBESTOS - JM #60 OR EQUAL
(h) BOLTING (EXTERNAL)	SA-193-B7 / SA-194-2H
(i) INTERNALS	C.S.

CONNECTION SCHEDULE

MARK	NO. REQD	SIZE	RATING	FACING	DESCRIPTION
N-1	1	6"	150#	RF	P.S.V.
N-2	1	2"			BYPASS PUMP & RELIEF
N-3	1	6"			VENT
N-4	1	8"			FILL
N-5	1	3"			DRAIN
N-6	1	10"			PUMP SUCTION
N-7	1	1½"			P.I.
N-8 (A,B,C)	3	1½"			T.W. T.I.
N-9	1	1½"			L.T. L.I.
N-10	1	1½"			L.T. L.I.
N-11	1	1½"	150#	RE	L.T. L.I.
N-12	1	8"	150#	RF	VAPOR
M-1	1	20"	150#	RF	MANWAY

NOZZLE PROJECTIONS ARE FROM ℄ OF VESSEL TO EXTREME FACE OF FLANGE EXCEPT AS NOTED:

FOR & SMALLER
FOR TO INCLUSIVE
FOR & LARGER

...HED AND IS THE SOLE PROPERTY OF FLUOR ENGINEERS AND CONSTRUCTORS, INC. AND IS LENT TO THE ... IT AND IN CONSIDERATION OF THE LOAN OF THIS DRAWING, THE BORROWER PROMISES AND AGREES TO ... AT FOR WHICH IT IS FURNISHED. COPIES, LENT OR OTHERWISE DISPOSED OF DIRECTLY OR INDIRECTLY, ... WITH IT IS FURNISHED.