Chlorobiphenyl Balance

	Charge	Feed	Forefraction	Product	Resid
ϕ_2	126.47	253.68	360.25	19.90	—
σ	22.53	45.19	8.74	58.88	.
m	2.32	4.65	—	4.06	2.
p	14.67	29.43	—	16.65	27.
di	3.20	6.43	—	.51	9.
lime	.50	—	—	—	.5
Total	169.69	339.38	368.99	100.00	40.0

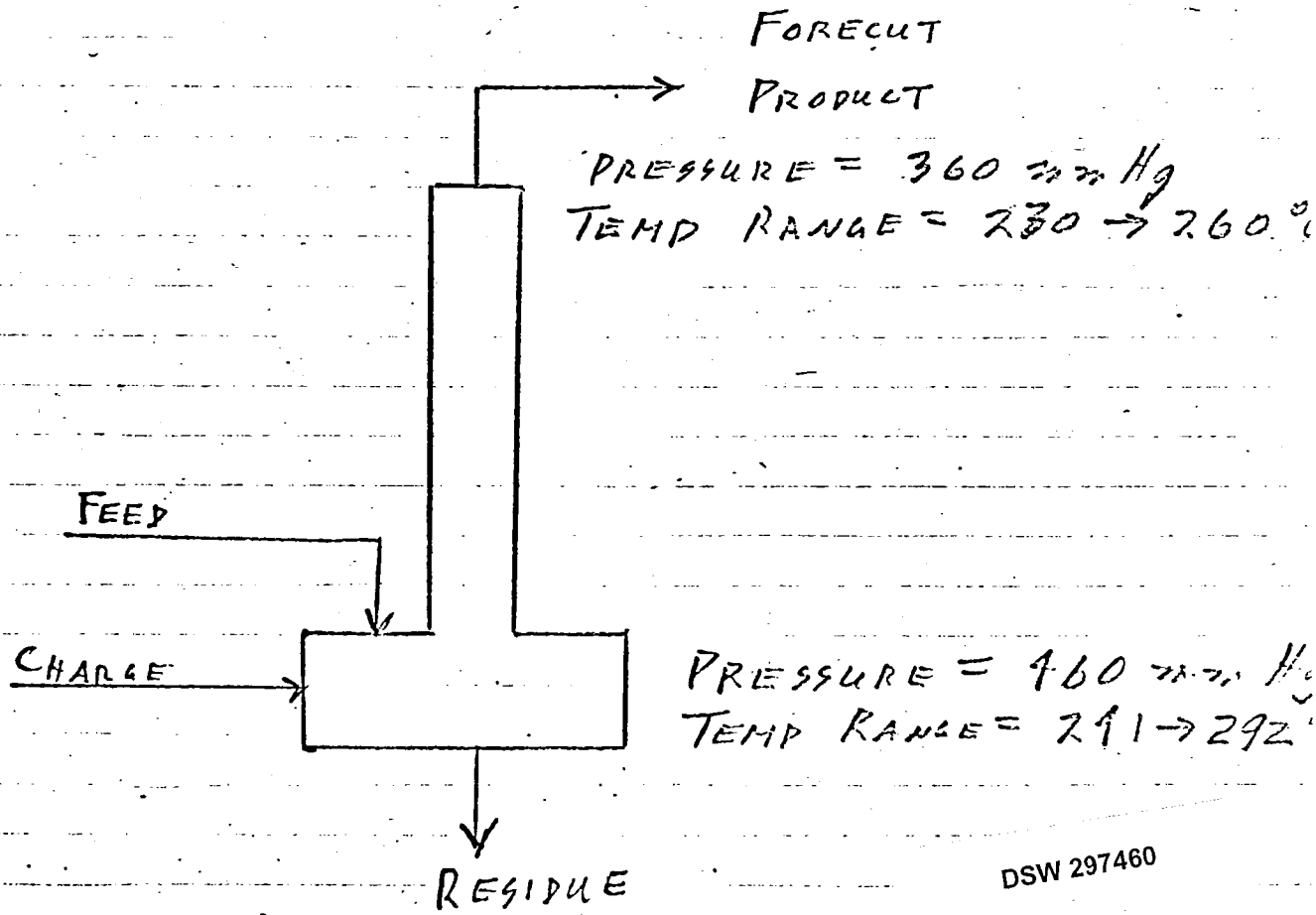

DSW 297460

STLCOPCB4067371

Process in Detail —

169.69 lbs. of Aroclor 1107 and .5 lbs. of Lime are charged to the stillpot of a 30-tray distillate column. The system is evacuated to a pressure of 360 mm. Hg and heat is applied to the charge. The charge is brought to boiling and the column is inventoried with material. The system is allowed to line out at total reflux. Head temperature will be about 230 °C and stillpot temperature and pressure will be about 241 °C and 460 mm Hg, respectively.

Distillate is now cut forward to the fraction receiver at a reflux ratio of 4/1. At the same time, Aroclor 1107 is started feeding to the stillpot at a rate sufficient to maintain a constant liquid level in the stillpot. If level cannot be maintained because of slow feed, the distillate rate can be reduced by increasing reflux ratio. This condition is maintained until 339.38 lbs. of Aroclor 1107 has been fed to the stillpot. At this time, approximately

Why not reduce firing rate to heater to control rate?

The feed is then stopped.

DSW 297461

STLCOPCB4067372

330 lbs. of forfraction will have been collected. The distillation is continued in the batch mode at a reflux ratio of 4/1. When a total of 368.99 lbs of forfraction has been collected in the forcut receiver the distillate stream is diverted to the product receiver and the reflux ratio is increased to 6/1. At this time, head and stillpot temperatures are about 235 and 261 °C, respectively.

Main fraction is collected at a reflux ratio of 8/1 until 100.00 lbs. of product has been obtained. At this point, distillation is stopped. Head and stillpot temperatures will be about 266 and 292 °C, respectively. The stillpot residue (40.08 lbs.) is pumped out to residue storage.

DSW 297462

Introduction

This tentative process describes a procedure for the manufacture of MCS1109. MCS1109 is a partial replacement for Aroclor 1221. It is produced by the fractionation of Aroclor 1105. Since it has been fractionated, ~~that~~ the concentration of compounds more highly chlorinated than the monochlorobiphenyls has been minimized. This means that its dispersal in the environment should have no deleterious effect.

For the present, it is planned to produce this material at the Hawthorne Plant in the same equipment as will be used for MCS1016.

DSW 297463

STLCOPCB4067374

Synopsis of Process

Crude Aroclor 1105 is sparged with nitrogen to remove most of the dissolved HCl. The crude is then treated with lime to convert HCl to non-volatile chlorides. The remainder of the crude is then distilled to give a biphenyl forefraction, a main fraction, and a residue. The main fraction is MCS 1109. The forefraction is recycled to the chlorination process, and the residue is distilled in a straight takeover still. The distilled residue is used as raw material for higher chlorinated Aroclors.

DSW 297464

FLOWSHEET FOR CHLOROBIPHENYL (MCS 1109)

FIG. 1

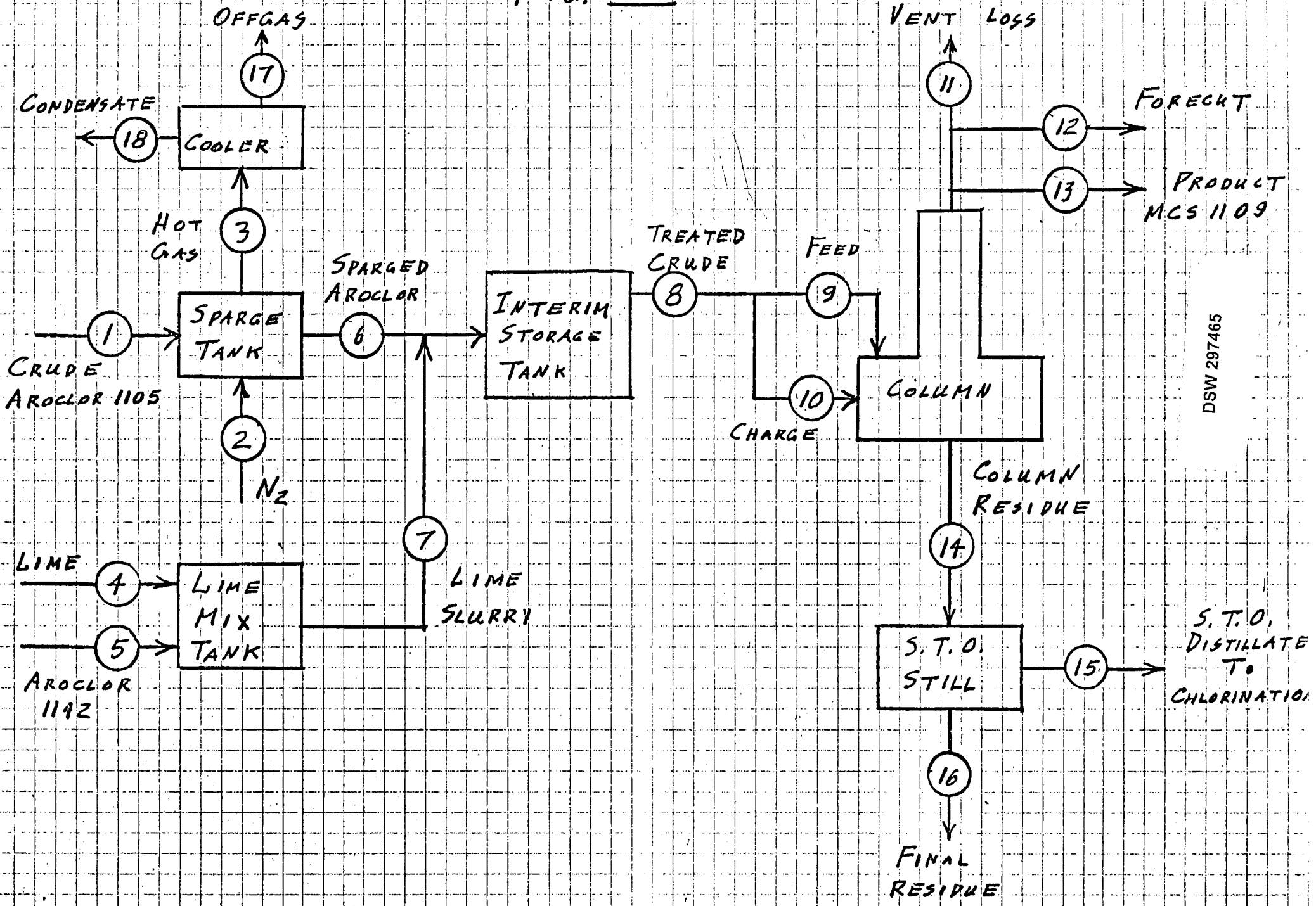

DSW 297465

STLCOPCB4067376

RIAL BALANCE FOR MCS1109

Fig. 2

DSW 297466

R	(6) SPARGED AROCLOR	(7) LIME SLURRY	(8) TREATED CRUDE	(9) FEED	(10) CHARGE	(11) VENT LOSS	(12) FORECUT	(13) MCS 1109	(14) COLUMN RESIDUE	(15) S.T.O. DISTILLATE	(16) FINAL RESIDUE	(17) OFFGAS	(18) COND
	380.15	—	380.15	253.44	126.71	—	360.25	19.90	—	—	—	0.03	0.95 0.
	67.72	—	67.72	45.15	22.57	—	8.74	58.88	0.10	0.10	—	—	0.05 0.
	6.97	—	6.97	4.65	2.32	—	—	4.06	2.91	2.91	—	—	0.0 0.
	44.10	—	44.10	29.40	14.70	—	—	16.59	27.51	27.51	—	—	0.24 0.
	9.63	1.13	10.76	7.17	3.59	—	—	0.57	10.19	10.19	—	—	—
	—	6.16	6.16	4.11	2.05	—	—	—	6.16	4.56	1.60	—	—
	—	0.60	0.49	0.33	0.16	—	—	—	0.49	—	0.49	—	—
	0.11	—	—	—	—	—	—	—	—	—	—	0.73	—
	—	—	0.17	0.11	0.06	—	—	—	0.17	—	0.17	—	—
	—	—	0.05	0.03	0.02	0.05	—	—	—	—	—	—	—
	—	—	—	—	—	—	—	—	—	—	—	3.62	—
	508.68	7.89	516.57	344.39	172.18	0.05	368.99	100.00	47.53	45.27	2.26	4.38	1.08 1.0
	760	760	760	760	760	360	360	360	460	40	40	760	760 76
	150	160	150	150	150	70	230-235	235-266	292	187-270	300	70	70 70

STLCOPCB4067377

DSW 297467

Fig. 2

STREAM / NT	① Crude Aroclor 1105	② Sparge Gas	③ Hot Gas	④ Lime	⑤ Aroclor 1142	⑥ Sparged Aroclor	⑦ Lime Slurry	⑧ Treated Crude	⑨ Feed	⑩ Charge	⑪ Vent Loss	⑫ For
BIPHENYL	381.13	—	0.98	—	—	380.15	—	380.15	253.44	126.71	—	36
-CHLOROBIPHENYL BIPHENYL	67.80	—	0.08	—	—	67.72	—	67.72	45.15	22.57	—	8.
-CHLOROBIPHENYL BIPHENYL	6.98	—	0.01	—	—	6.97	—	6.97	4.65	2.32	—	-
-CHLOROBIPHENYL BIPHENYL	44.14	—	0.04	—	—	44.10	—	44.10	29.40	14.70	—	-
CHLORO BIPHENYL IPHENYL	9.63	—	—	—	1.13	9.63	1.13	10.76	7.17	3.59	—	-
HIGHER BOILERS S	—	—	—	—	6.16	—	6.16	6.16	4.11	2.05	—	-
LIME	—	—	—	0.60	—	—	0.60	0.49	0.33	0.16	—	-
HCl	0.84	—	0.73	—	—	0.11	—	—	—	—	—	-
$CaCl_2$	—	—	—	—	—	—	—	0.17	0.11	0.06	—	-
H_2O	—	—	—	—	—	—	—	0.05	0.03	0.02	0.05	-
N_2	—	3.62	3.62	—	—	—	—	—	—	—	—	-
TOTAL	510.52	3.62	5.46	0.60	7.29	508.68	7.89	516.57	344.39	172.18	0.05	368.
PRESSURE, mm Hg	760	760	760	760	760	760	760	760	760	760	360	36
TURE, °C.	150	25	150	25	160	150	160	150	150	150	70	230-

STLCOPCB4067378

Suggested Tentative Product Specification
for MCS 1109

Crystallizing Point Range	10-16°C
Biphenyl Concentration Range	18-22%
O-chlorobiphenyl conc range	50-70%
m- " " "	0-5%
p- " " "	12-23%
Dichlorobiphenyl conc.	1% max

Aroclor 1105 (Tentative Specification

Biphenyl	<75%
O-chlorobiphenyl	>13%
m-chlorobiphenyl	0-1.4%
p-chlorobiphenyl	>8%
polychlorobiphenyl	<1.9%
HCl	≤ 6.0 meq/100g
Temperature	≥ 100°C

DSW 297468

STLCOPCB4067379

DSW 297469

Process in Detail

1.) Chlorination of biphenyl.

The production of crude Aroclor 1105 is described in the Tentative Process by A. Thompson (report no. P-). Chlorination is not discussed in this report.

2.) Hot sparging of crude Aroclor 1105

Crude Aroclor 1105 is fed continuously to a back-mixed vessel where it is contacted with nitrogen. The sparging is carried out at 150 °C. at approximately atmospheric pressure. 510.52 lbs. of crude Aroclor 1105 is sparged with 3.62 lbs. of nitrogen gas. The hot offgas from the sparge tank contains most of the HCl (.73 lbs.) which was contained in the crude Aroclor. The offgas also contains .98 lbs. of vaporized biphenyl and .13 lbs. of chlorobiphenyls. Total offgas flow is 5.46 lbs.

The offgas is cooled to 70 °C in a condenser. The cooled offgas (a total of 4.38 lbs) leaves the condenser and passes to a water scrubber to remove HCl. The old offgas still contains .03 lbs. of biphenyl and traces of the monochlorobiphenyls. The condensed biphenyl and chlorobiphenyls, a total of 1.08 lbs., flows from

STLCOPCB4067380

the condenser and is recycled to the chlorinators.

The sparged Aroclor, 508.68 lbs., flows from the sparge tank to the lime treatment area. It still contains .11 lbs of HCl ~~to be treated~~ which is to be reacted with lime.

3.) Lime treatment of sparged Aroclor

In order to be able to feed lime continuously into the sparged Aroclor stream, the lime is made up into a slurry consisting of 0.6 lbs. of lime ~~and~~ in 7.29 lbs. of Aroclor 1142. This slurry is fed continuously into the stream of sparged Aroclor. The total mixture is fed continuously into a well-insulated storage tank ~~tank~~. Temperature in the tank is maintained in the range of 120 to 150 °C, and the residence time of the lime/Aroclor mixture in this tank must be a minimum of 1 to 3 hours. This retention time is necessary to make certain that all the HCl in the sparged Aroclor has reacted with the lime.

Good circulation of the tank contents is necessary to insure suspension of the lime and good contacting of

lime with the Aroclor.

The lime/Aroclor mixture is fed continuously into the tank. When 172.18 lbs ~~has~~ of treated crude has accumulated in the tank, it is charged to the stillpot of the distillation system. The level in the storage tank is allowed to rise again until enough slurry ~~is~~ is in the tanks to maintain the minimum residence time of 1 to 3 hours. Meanwhile the distillation system is brought to total reflux. At this time, treated crude is pumped continuously from the storage tank into the stillpot at a rate which maintains a constant level in the storage tank. At the same time, distillate is taken forward from the stillpot. In this way, ~~this~~ an additional 344.37 lbs. of treated crude is fed into the stillpot. ~~Between charge and~~ Considering both charge and feed, a total of 516.57 lbs. of treated crude is pumped into the stillpot.

DSW 297471

4.) Fractionation of treated crude

Treated crude is fractionated in a 30-tray distillation column at a head pressure of 360 mm Hg. Stillpot pressure is estimated to be 460 mm Hg.

STLCOPCB4067382

172.18 lbs. of treated crude is charged to the stillpot. ~~[illegible]~~ no R

The charge is brought to boiling and the column is inventoried with material. The system is allowed to line out at total reflux. Head temperature will be about 230 °C and stillpot temperature and pressure will be about 241 °C and 460 mm Hg, respectively.

Distillate is now cut forward to the forefraction receiver at a reflux ratio of 4/1. At the same time, treated crude from the storage tank ~~[illegible]~~ is started feeding to the stillpot at a rate sufficient to maintain a constant liquid level in the stillpot. If level cannot be maintained because of slow feed, the distillate rate can be reduced by increasing reflux ratio. This condition is maintained until 344.39 ~~339.38~~ lbs. of treated crude ~~[illegible]~~ has been fed to the stillpot. The feed is then stopped. At this time, approximately

DSW 297472

STLCOPCB4067383

330 lbs. of forfraction will have been collected. Distillation is continued in the batch mode at reflux ratio of 4/1. When a total of 368.99 lbs. of forfraction has been collected in the forecut receiver the distillate stream is diverted to the product receiver and the reflux ratio is increased to 8/1. At this time, head and stillpot temperatures are about 235 and 261 °C, respectively. The forecut fraction is recycled to the chlorination area.

Main fraction is collected at a reflux ratio of 8/1 until 100.00 lbs. of product has been obtained. This material is the ~~done~~ final product, CS 1109. At this point, distillation is stopped, head and stillpot temperatures will be about 266 and 92 °C, respectively. The column residue (47.53 lbs) is pumped out to residue storage. This residue will be distilled in a straight-takeover (S.T.O.) still to recover Aroclor.

DSW 297473

STLCOPCB4067384

5.) Distillation of column residue

47.45 lbs of column residue are charged to a S.T.O. still. The pressure in the still is reduced to 40 mm Hg. The still is heated and distillate begins to boil over at a temperature of 197 °C.. The distillation is stopped when the stillpot temperature reaches 300 °C. 45.27 lbs of distillate is collected. This material is recycled for further chlorination to make Aroclor 1254 or 1260. The residue (2.26 lbs which consists of tars, $FeCl_3$ catalyst and lime is transferred hot to an incinerator.

DSW 297474

Discussion of Variables

1.) Effect of variations in crude Aroclor 1105 composition

The tentative process material balance is based on a laboratory distillation of Aroclor 1105 produced in a batch chlorinator at the Krummrich plant. Plant crude will actually be produced in the continuous chlorination system. Material from the continuous system will differ in composition from material produced batchwise. The important difference will be that the dichlorobiphenyl (DCB) content of continuous crude will be higher than that of batch crude. If the continuous chlorination is carried out in one continuous back-mixed stage, the DCB content will be considerably higher than that of batch crude (13 % DCB's and higher chlorinated biphenyls versus 1-2 % DCB's in batch crude). However, if the continuous chlorination is spread out over a number of back-mixed stages in series, the continuous crude composition begins to approximate

DSW 297475

STLCOPCB4067386

that of batch crude. Mathematical modeling by Dr. C. Hagberg of CED indicates that with 3 or more back-mixed stages the differences between continuous and batch crude are small. At any rate, any differences between the two crudes will be reflected in higher column resides and lower yields of MCS 1109 than those given in this tentative process.

(See memo - Carl G. Hagberg to A. J. Heinze,

Differences in the degree of chlorination will affect crude composition, and hence also the fractionation material balance. A higher degree of chlorination would give a smaller biphenyl percent, a higher yield of MCS1109 per pound of crude, and a higher resides/MCS1109 ratio. The latter effect is undesirable since resides must be either converted to the solid Aroclors or else incinerated. A lower degree of chlorination would reverse the above effects.

If the fractionation is ~~being~~ controlled by material balance, the above variation in crude

STLCOPCB4067387

composition could have quite an adverse effect on product quality and yield. The possibility of crude composition variation must be taken into account. The next section, on control, discusses this point further.

DSW 297477

2.) Control of fractionation

There are 3 cuts points in the fractionation. These are, in order of occurrence: 1.) stop crude feed 2.) end forecut, start main-fraction, and switch to 2/1 reflux ratio 3.) end of main-fraction and end of distillation. Possible means of control of these cut points are: by material balance, by gas-liquid chromatographic analysis of distillate samples, head or stillpot temperatures, and crystallizing point of distillate samples.

Control by material balance presupposes a constant, known feed composition. During startup it is absolutely essential that some means of control other than material balance be used. This will be necessary until we have pinned down the exact crude composition of the crude and have determined the degree of variation

STLCOPCB4067388

in composition ~~and~~ during day-to-day running of the continuous chlorination (see section I ~~above~~ above). We recommend that during this startup phase, gas-liquid chromatography be available to follow changes in distillate composition and in crude composition. Figure 3 in the appendix plots the concentrations of biphenyl, o-chlorobiphenyl, ~~and~~ p-chlorobiphenyl, and dichlorobiphenyls in distillate versus percent of the batch distilled. This figure in conjunction with distillate analyses should provide a guide to fractionation control.

Figures 4 and 5 in the appendix depict crystallizing point versus o-chlorobiphenyl content of biphenyl and versus p-chlorobiphenyl content of distillate, respectively. The latter figure shows that crystallizing point would be an adequate indicator of the end of the distillation (at 7 1/2% concentration of p-chlorobiphenyl the crystallizing point is increasing rapidly). The end (the desired cut point) point corresponds with 12% o-chlorobiphenyl in

STLCOPCB4067389

the distillate. Fig 4 shows that there is little change in crystallizing point with concentration at this level.

Figures 6 and 7 show head and stillpot temperatures, respectively, versus percent of the batch distilled. Stillpot temperature appears to be the ~~most~~ more sensitive indicator for the end of distillation. Neither temperature would be adequate for the other two cut points.

DSW 297479

To summerize, the first cut point (stopping of feed) is most adequately determined by material balance. During startup, this must be supplemented by distillate and crude analyses. Neither distillate crystallizing point nor distillation temperatures will be of any use here.

The second cut point (end of forecut, start of main fraction, and change of reflux ratio from 4/1 to 8/1) can be determined by material balance if plant experience proves this to be adequate. During startup this must be supplemented by distillate analyses. Again, neither temperatures nor distillate crystallizing

STLCOPCB4067390

point will be sensitive enough to determine this point. ~~If necessary, this cut point~~ If control procedures prove too insensitive, it is preferable to err ~~in~~ in the direction of being late in making the cut point changes. This would mean that the main fraction would not contain enough biphenyl. This can be remedied by adding biphenyl to the main fraction to bring it within specifications (see section 10). The only ill effect will be that the forecut will be larger and will contain more o-chlorobiphenyl to be recycled to chlorination.

~~The end of fractionation cut point can be determined by material balance (if it proves adequate) by crystallizing point of the distillate, or by distillation temperatures.~~

DSW 297480

The end of distillation cut point is determined by two considerations: 1) the main fraction must not contain more than 1.0% of biphenyl ~~chlorinated beyond the mono level~~ more highly chlorinated than

STLCOPCB4067391

monochlorobiphenyl. 2) ~~a minimum~~ liquid level in the stillpot must not fall below a minimum level. ~~whichever of these conditions~~ If the stillpot level falls to the minimum while the polychlorobiphenyl content of the main fraction is still less than 1.0%, then the cut point ~~is~~ can be determined by stillpot level. It could also be determined by material balance. If the polychlorobiphenyl content of the main fraction approaches 1.0%, however, the cut point can be determined by material balance (if it proves adequate), by crystallizing point of the distillate, or by distillation temperatures. During startup control ~~also~~ must be supplemented by distillate analysis by chromatography.

DSW 297481

3. Ratio of stillpot feed to stillpot charge

The stillpot is fed with fresh crude ~~during~~ through most of the ~~[illegible]~~ forecut. There is an optimum feed/charge ratio. If the ratio is less than the optimum, ~~the product yield will be lessened~~ this [illegible]

STLCOPCB4067392

than optimum. The minimum level in the stillpot will be reached long before the polychlorobiphenyl concentration in the main fraction will have reached the specification value (1.0%). This means a loss of yield. On the other hand, if the feed/charge rate is too high, the last portion of the forecut will contain too much o-chlorobiphenyl. This represents a yield loss and an increased recycle of o-chlorobiphenyl to chlorination. The recommended feed/charge ratio is 2.0/1. Laboratory experimentation indicates that this ratio ~~should~~ must not exceed 2.2/1.

4.) Reflux ratio

DSW 297482

Reflux ratio was not optimized in the laboratory. It is recommended that lower reflux ratios not be used. Higher reflux ratios would cause no problem other than slowing the distillate rate. This may be necessary during the forecut if the chlorination rate can't keep up with the distillation rate.

STLCOPCB4067393

5.) Corrosion

The material of construction of the distillation column is stainless steel. Stainless steel is prone to stress corrosion cracking in the presence of inorganic chlorides. For this reason it is essential that crude entering the distillation system be free of HCl. HCl is removed from the crude by first sparging with nitrogen gas to remove the bulk of it, then treating with hydrated lime to remove the residual HCl chemically.

6.) Nitrogen sparging of crude Aroclor 1105

Fresh samples of crude from the plant ranged in HCl concentration from 0.3 to 2.0 meq. HCl/10 Since this variation was so large, it was decided to measure the ~~HCl~~ concentration of dissolved HCl in Aroclor 1105 under an atmosphere of pure HCl gas. The equilibrium concentrations were 6.0 meq HCl/100 g at 120°C and 4.5 meq HCl/100 g at 150°C. An equilibrium line of HCl concentration in the vapor

DSW 297483

phase versus that in the liquid phase was developed by sparging HCl-saturated Aroclor 1105 with nitrogen and analyzing vapor and liquid phases for HCl at intervals. Fig. 8 gives the ~~plot for~~ equilibrium lines for 120 and 150 °C. The plots are essentially straight lines, so that Henry's Law constants can be used. The line for 150 °C was used to calculate that 3.62 lbs. of nitrogen would be sufficient to lower the HCl concentration of 510 lbs. of HCl-saturated crude Aroclor 1105 from 4.5 meq HCl/100 g. down to 0.6 meq HCl/100 g. It is essential that the nitrogen flow be at least 3.62 lbs./510 lbs of crude. Otherwise, the HCl concentration of the sparged material may be too high for the lime treatment step. This would allow HCl to enter the distillation system and cause ~~problems~~ corrosion problems. It is also necessary that the sparging temperature be at least 150 °C., Otherwise the nitrogen will not be as efficient in removing HCl. For

DSW 297484

example, it can be calculated that at 120 °C, the same amount of nitrogen (3.62 lbs/510 lbs of oxide) would leave 1.0 meq HCl/100 g in the sparged Aroclor.

7.) Lime treatment

The purpose of the lime treatment is to remove the last bit of HCl from the sparged Aroclor before feeding it into the distillation system.

The lime does not react stoichiometrically with the HCl. Apparently only the exposed surface of the lime particles reacts to form $CaCl_2$ while the interior of the lime particles remains unchanged. Lime requirements can best be expressed as grams lime/meq. HCl. Laboratory tests have shown that 0.15 g. lime/meq. HCl is not quite sufficient to ~~remove~~ react all the HCl and that 0.20 g. lime/meq. HCl is more than sufficient. The tentative process balance is based on the higher lime usage.

DSW 297485

Fig. 9 depicts the fall in HCl concentration with time during batchwise treatment with Krummrich plant lime. Reaction

STLCOPCB4067396

is rapid ~~at the beginning~~ until either the HCl or the reacting portion of the lime is used up. The reaction is virtually complete after 6 minutes. It can be seen from these curves that a lime usage of 0.15 g lime/meq HCl is not quite adequate to remove all the HCl while 0.20 g lime/meq HCl is ~~more than adequate~~ sufficient to remove all the HCl. From these plots, it is apparent that with the proper amount of lime, a retention time of ~~one~~ at least one hour should be sufficient to remove all HCl in a continuous process.

It is essential that the Aroclor ~~leaving~~ treated entering the distillation system be checked for the absence of HCl. Analytical methods are presented in the appendix.

DSW 297486

8.) Slurrying of lime in Aroclor 1142

Lime is fed into the sparged Aroclor 1105 stream as a concentrated slurry (8 to 14% by weight of lime) in Aroclor 1142. Aroclor 1142 is used rather than Aroclor 1105 ~~because it has a higher flashpoint~~ because of safety considerations (Aroclor 1142 has a higher flashpoint). Unfortunately Aroclor 1142 contains 17 to 20% dichlorobiphenyls. These are undesirable in MCS 1109 (specification is not more than 1.0% ~~total~~ polychlorobiphenyls). For this reason the amount of Aroclor 1142 used should be kept at a minimum. The tentative process balance calls for 7.29 lbs. of Aroclor 1142. The largest amount used in the laboratory was 11.8 lbs (on the same basis). More than this amount of Aroclor 1142 should definitely not be used.

DSW 297487

9.) Crystallizing point of distillate

The crystallizing point of distillate was found to range from 70 °C at the start of distillation when almost pure biphenyl was coming over, down to near room temperature when the distillate was high in o-chloro-biphenyl concentration, and up again to 55 °C towards the end of fractionation. Distillate lines and receivers will have to be heated to prevent solidification.

10.) Biphenyl concentration in product

The specifications on MCS1109 call for 18-22 % biphenyl. ~~During fractionation it is best to~~ If the product is found to be low in biphenyl, it can be brought into specification by simply adding the appropriate amount of biphenyl raw material. If the product is too high in biphenyl, the ~~solubility~~ problem is more difficult to solve. It may be necessary to

DSW 297488

redistill the product to remove the excess biphenyl. From this, it is definitely preferable ~~to~~ during fractionation to make a product containing too little biphenyl rather than too much.

11.) Blending

The composition of the distillate will vary during fractionation. To insure a uniform product, each batch of MCS1109 should be thoroughly mixed.

12.) Semi-continuous operation of the residue still

The residue still can be operated semi-continuously. Residue from the MCS *1109* fractionation can be fed continuously to the still during the distillation. When the still temperature approaches 300°C. the feed is stopped. The other operating condition of the distillation remain unchanged.

DSW 297489

13.) Pressure and temperature in residue still operation

The residue fed to the laboratory still was at 25°C. In the plant, residue can be fed directly from the fractionation column at *285°C*. The residue will begin to ~~boil at 165 torr.~~ *boil at* at this temperature. Therefore, reducing the still pressure to 40 ~~torr~~ *mm Hg* will cause a portion of the residue to boil over without additional heat input.

~~recirculated~~ *flow mm Hg*

The still is heated to an end point of 300°C. at 40 ~~torr~~ *mm Hg*. The pressure of 40 ~~torr~~ was chosen to achieve a 97% plus recovery of residue with a maximum still temperature of 300°C. The maximum temperature is set at 300°C. ~~for the same reasons mentioned in discussion of "cycle time" for the fractionation column~~ to minimize temperature exposure.

STLCOPCB4067400

Raw Material Requirements

Material	lbs. required per 100 lbs. MCS 11
Crude Aroclor 1105	510.52
Aroclor 1142	7.29
Nitrogen	3.62
Lime	.60

DSW 297490

Atmospheric and Stream Pollution

There are 4 possible ~~pollutant~~ discard streams from the plant: column vent loss (stream 11), column residue (stream 14 — a possible ~~pollutant~~ effluent stream), the final residue (stream 16), and offgas (stream 17).

The size of the column vent loss is dependent on such unknown factors as the amount of air leakage through the distillation system. Estimates by CED (based on 15 lb/hr air leak rate) indicate that the vent loss of organics would be less than 0.5 lb/hr. (It should be kept in mind that this process will operate perhaps 2 months per year). Most of this would be biphenyl. ~~There would be much smaller~~ ~~In no case would there be any~~ In no case would there be any ~~measureable~~ measureable quantities of polychlorobiphenyls in the vent loss. The organics would eventually end up in the sewer where some could ~~possibly~~ be recovered by skimming. They would then be incinerated.

The column residue will normally be distilled in a S.T.O. still to recover Aroclor. This distilled material would be chlorinated to

DSW 297491

STLCOPCB4067402

Aroclor 1254 or 1260. If the rate of production of column residue should be greater than the demand for the solid Aroclors, then the column residue will become a discard stream and it will have to be incinerated.

The final residue (amounting to 2.26 lbs/100 lbs of MCS1109 or perhaps 45 – 50M lbs. per year) will have to be incinerated.

DSW 297492

The offgas consists essentially of nitrogen and HCl. It will also contain small quantities of biphenyl and much smaller quantities of chlorinated biphenyls. The biphenyl content is estimated to be 0.03 lbs/100 lbs of MCS1109, or perhaps 600 lbs per year. Total monochlorobiphenyl content of the offgas is estimated to be 0.001 lbs./100 lbs of MCS1109 or perhaps 20 lbs per year. This material will eventually end up in the sewer. It should be possible to remove some by skimming. Further research will be carried out in this area to determine the best means of removing

these organics from the ~~gas~~ offgas stream.

DSW 297493

STLCOPCB4067404