SERVICE BULLETIN

OCT. 25, 1973 **No.** Q75 **under** BRAKES

FOR BRANCHES, DISTRIBUTORS AND CUSTOMERS.

PLAINTIFF'S EXHIBIT

MAC-61

INITIAL BRAKE ADJUSTMENT WITH AUTOMATIC SLACK ADJUSTERS

(All Models with Eaton Automatic Slack Adjusters)

PURPOSE To inform field of correct method of brake adjustment after a brake overhaul (new lining) on subject models.

INFORMATION Whenever new brake lining has been installed on a chassis with Eaton automatic slack adjusters, the brakes must be adjusted as follows:

1. Remove the 1/4 in. pipe plug on the slack adjuster to expose the worm shaft. See illustration.

2. With a 1/4 in. male hex wrench (Allen), turn the worm shaft clockwise until the brake shoes are tight against the drum.

NOTE

Backing off the slack adjuster requires much more force than taking up the slack adjuster.

3. Back off the worm shaft counterclockwise, approximately 3/4 of a turn until wheel drag is eliminated.

NOTE

The Eaton automatic slack adjuster is lubricated for life; no further lubrication is necessary.

4. Reinstall the 1/4 in. pipe plug in the slack adjuster.

RECOMMENDATION When new brake lining has been installed on subject vehicles, adjust the brakes as described herein.

PRINTED IN U.S.A.

(Continued Over)

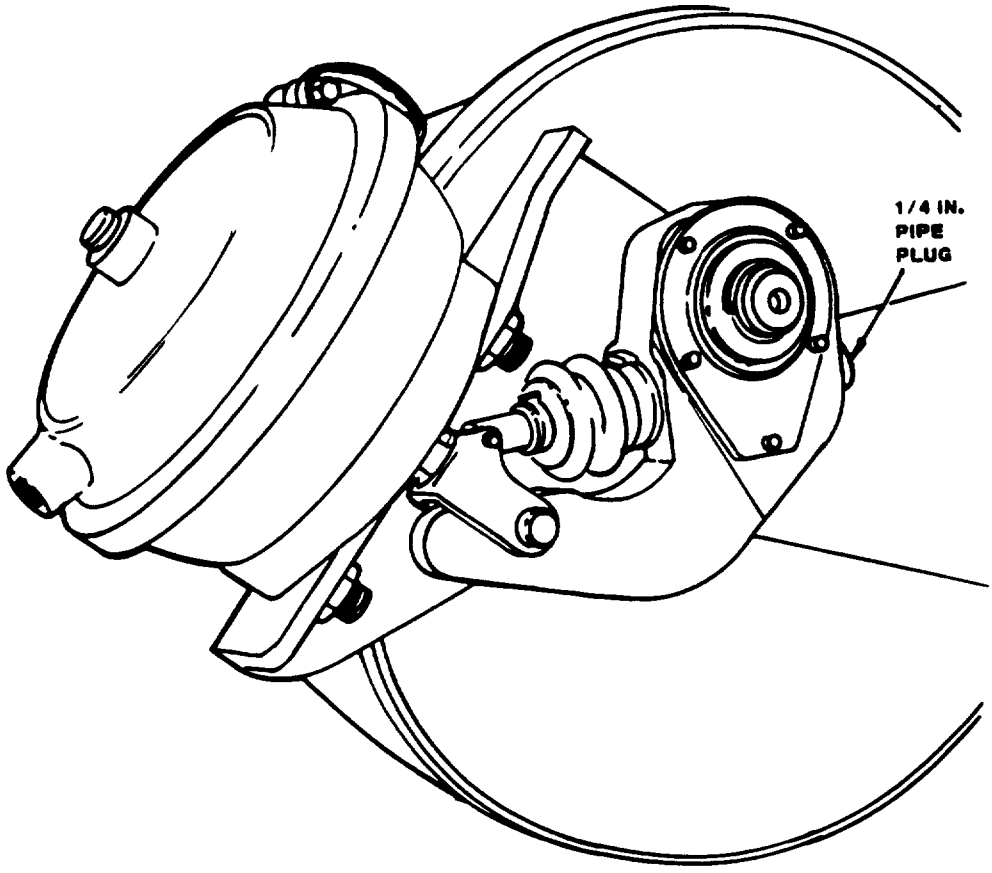

EATON AUTOMATIC SLACK ADJUSTER