PLAINTIFF'S EXHIBIT

UPRC-192

HEAT EXCHANGER SPECIFICATION SHEET

Customer:	Pontiac Refining Corp.	Date:	3-15-60
Plant Location:	BTX Plant - Feed Preparation Section	Year Built:	1959
Manufacturer:	American Locomotive Co.	Installed:	1959
Service of Unit	Debutanizer Dondenser	Serial No:	46899--46100
		Item No:	BTX-E-301 A & B
Size: 22-192	Type: CI 34-42H	Connected in:	Series
Sq. Ft. per Unit: 1740	Shells per Unit: 2	Sq.Ft./Shell:	870

PERFORMANCE OF ONE UNIT

	Shell Side	Tube Side
Fluid Circulated:	Hydrocarbons-Butanes	Circulating Water
Total Fluid Entering:	30,200 lb/hr.	161,000 lb/hr. 322 GPM
Vapor	30,200 lb/hr.	
Liquid		161,000 lb/hr. 322 GPM
Steam		
Non Condensables		
Fluid Vaporized or Condensed:	Cond. 30,200 lb/hr.	
Steam Condensed:		
Gravity:	Liq. .5635 @ 125 °F	.995 @ 100 °F
Viscosity:	Liq. .019 cp. @ 125 °F	.68 CP @ 100 °F
Molecular Weight:	58	18
Specific Heat:	[illegible]	1.00 BTU = °F
Latent Heat Vapors:	[illegible]	BTU =
Temperature In:	135 °F	90 °F
Temperature Out:	120 °F	100 °F
Operating Pressure:	70 #/Sq.In.	50 #/Sq.In.
Number of Passes:	-	2
Velocity:	Ft./Sec.	Ft./Sec.
Pressure Drop:	5 #/Sq.In.	10 #/Sq.In.
Fouling:		
Heat Exchanged:- BTU/Hr.	4,020,000	M.T.D. Corr. 29.° °F
Transfer Rate:- Service	77.6	Clean

CONSTRUCTION

150 PSIG

Design Pressure:	200 #/Sq.In.	150 #/Sq.In.
Test Pressure:	150 #/Sq.In.	225 #/Sq.In.
Design Temperature:	200 °F	150 °F
Tubes: Exh. Adm. B-[illegible]	No. 275 OD 3/4" BWG 16 Length 16'0" Pitch 15/16" [illegible]	
Shell: A-265-C FB	ID 21-1/2" OD 21-7/8" Shell Cover A-265-C FB	
Shell Cover: A-265-C FB	Flat Head Cover A-265-C FB	
Channel: A-265-C FB	Channel Cover A-265-C FB	
Tube Sheets:- Stationary	Naval Brass Sp17	Floating Naval Brass B-[illegible]
Baffles:- Cross A-7	Type Segmental	Thickness 3/16
Baffle:- Long	Type	Thickness
Tube Supports: A-7		Thickness 1/2
Gaskets: Shell Metal Jacketed Asbestos 1/8" Channel Asbestos 1/16 Inch.		
Connections: Shell - In 8"&6" Out 6"& 6"		Series 150 lb. RF
Channel - In 3" Out 3"		Series 150 lb. RF
Corrosion Allowance:- Shell Side 1/8"		Tube Side [illegible]
Code Requirements: API ASME 1952 and TEMA Stds.		
Weights:- Each Shell 8000 Lb.	Bundle 3200 Lb	Full of Water 5200 Lb.

REMARKS:

Water side was originally 4 pass

600 26336

CONFIDENTIAL PROPRIETARY

FF00695 09

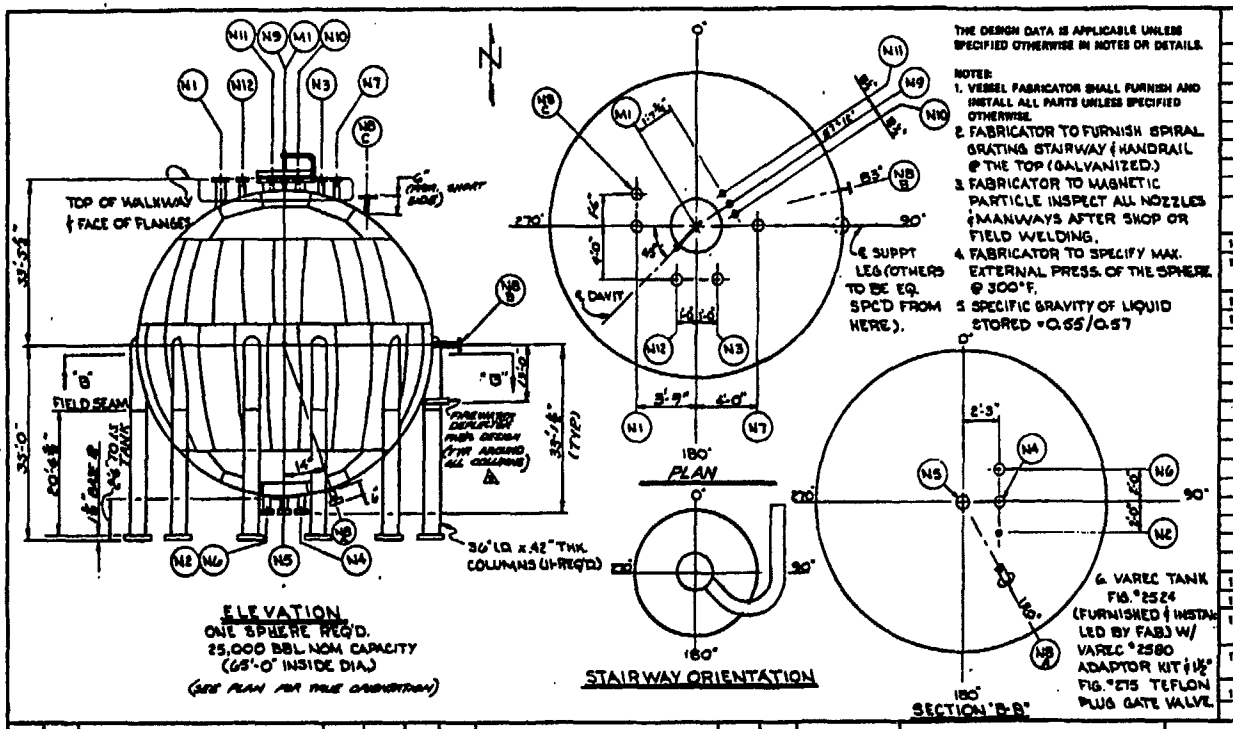

THE DESIGN DATA IS APPLICABLE UNLESS SPECIFIED OTHERWISE IN NOTES OR DETAILS.

NOTES:
1. VESSEL FABRICATOR SHALL FURNISH AND INSTALL ALL PARTS UNLESS SPECIFIED OTHERWISE.
2. FABRICATOR TO FURNISH SPIRAL GRATING STAIRWAY & HANDRAIL @ THE TOP (GALVANIZED.)
3. FABRICATOR TO MAGNETIC PARTICLE INSPECT ALL NOZZLES & MANWAYS AFTER SHOP OR FIELD WELDING.
4. FABRICATOR TO SPECIFY MAX. EXTERNAL PRESS. OF THE SPHERE @ 300°F.
5. SPECIFIC GRAVITY OF LIQUID STORED = 0.55/0.57

DESIGN DATA

1. DESIGN BASIS: SP– & ASME VIII
2. STAMPING REQUIREMENTS: YES
3. SPECS: SA 42.1, 42.2, 42.2A, 42.2G & 42.7
4. DESIGN PRESSURE: 100 PSIG, TEMP. 132
5. OPER. PRESSURE: 40 PSIG, TEMP. 80
6. POSTWELD HEAT TREATMENT @ PER CODE
7. WELD EXAMINATION: 100 %
8. JOINT EFFICIENCY: SHELL 100%
9. NOMINAL CORROSION ALLOWANCE: SHELL 1/16" HEADS NOZZLE NECKS 1/16"
10. M.A.W.P. @ DESIGN TEMP. PER CODE
11. BASIS FOR CALCULATED TEST PRESS. SHOP/FIELD TEST LIMITED BY: PER CODE
12. HYDRO-TEST PRESS. SHOP — PSIG FIELD PER CODE
13. MATERIAL SPECIFICATIONS:
    (a) SHELL SA-516-70
    (b) HEADS
    (c) LINING/SLADDING
    (d) NOZZLE NECKS & PIPE SA-106-B
    (e) FLANGES (EXTERNAL) SA-105
    (f) COUPLINGS (SCREWED/[redacted]) SA-181-1
    (g) GASKETS 1/16" THK. ASBESTOS - JM #60 OR EQ
    (h) BOLTING (EXTERNAL) SA-193-B7 / SA-194-2H
    (i) INTERNALS C.S.
    (k) SUPPORTS C.S.
    (l) EXTERNAL APPURTENANCES C.S.
14. M.H./H.H. FURNISH W/ [redacted] COVER, STUDS & GASKET
15. PAINT PER SP– 647820-80.3 (BY FAB'R)
16. INSULATION (BY OTHERS) HOT/COLD NONE — NO. OF LAYERS — TOTAL T
17. FIREPROOFING (BY OTHERS) [redacted] LEGS — THK. — MATL. — SQ. FT. — C
18. INSPECTION BY — CLIENT/F

REV.	DATE	REVISION DESCRIPTION	DRAWN / CHECK	APP.
3	3/3/76	SEE DWG. REV. REC. SHT.	JM / RW	
2	11/21/75	SEE DWG. REV. REC. SHT.	JM / RW	
1	10/22/75	SEE DWG. REV. REC. SHT.	JM / JC	

DRAWING NO.	REFERENCE DRAWING – CONTRACT NO. 647820
00-2-4001	MANWAY DAVIT DETAILS

FLUOR

DRAWN BY: JJM
CHECKED BY: RW 10/14/75
SUPERVISOR: M. Kennedy — RELEASE DATE
SUPERVISING ENGR.: J.S. Kamas — INITIALS: JSK
PROJECT ENGR. — APP. DATE
CLIENT — APP. DATE

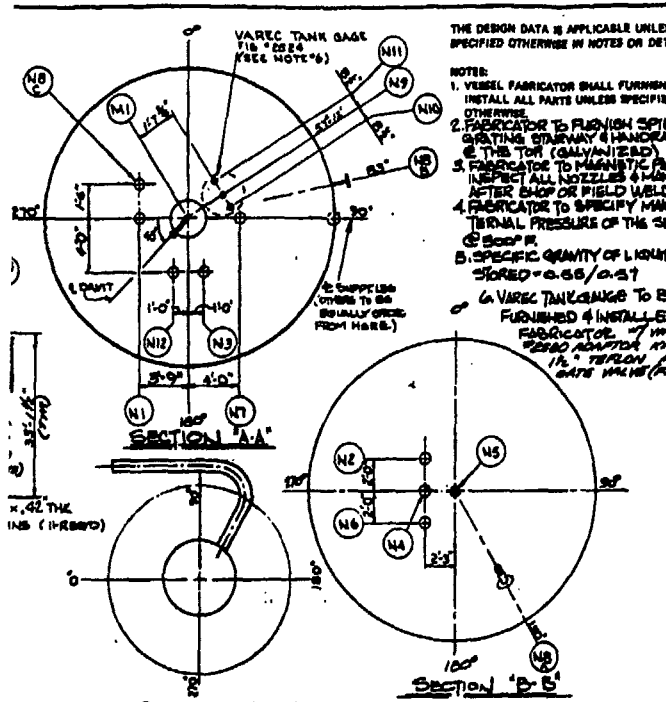

THE DESIGN DATA IS APPLICABLE UNLESS SPECIFIED OTHERWISE IN NOTES OR DETAILS.

NOTES:
1. VESSEL FABRICATOR SHALL FURNISH AND INSTALL ALL PARTS UNLESS SPECIFIED OTHERWISE.
2. FABRICATOR TO FURNISH SPIRAL GRATING STAIRWAY & HANDRAIL @ THE TOP (GALVANIZED)
3. FABRICATOR TO MAGNETIC PARTICLE INSPECT ALL NOZZLES & MANWAYS AFTER SHOP OR FIELD WELDING.
4. FABRICATOR TO SPECIFY MAX. EXTERNAL PRESSURE OF THE SPHERE @ 500°F.
5. SPECIFIC GRAVITY OF LIQUID STORED = 0.55/0.57
6. VAREC TANK GAUGE TO BE FURNISHED & INSTALLED BY FABRICATOR. 4" VAREC #2880 ADAPTOR KIT & 1½" TEFLON PLUG GATE VALVE (PAR. 2.7.5.)

DESIGN DATA

1. DESIGN BASIS: SP–	& ASME VIII DIV.
2. STAMPING REQUIREMENTS: Yes	
3. SPEC: SP 42.1, 42.2, 2A, 2G, 42.7	
4. DESIGN PRESSURE: 150 PSIG, TEMP. 152	°F
5. OPER. PRESSURE: 40 PSIG, TEMP. 80	°F
6. POSTWELD HEAT TREATMENT @ Per Code °F	HRS/IN
7. WELD EXAMINATION: 100% Per Code	
8. JOINT EFFICIENCY: SHELL 100% RT#1 % HEADS —	%
9. NOMINAL CORROSION ALLOWANCE: SHELL 1/16" HEADS NOZZLE NECKS 1/16"	
10. M.A.W.P. @ DESIGN TEMP. Per Code	PSIG
11. BASIS FOR CALCULATED TEST PRESS.	PSIG
SHOP/FIELD TEST LIMITED BY: Per Code	
12. HYDRO-TEST PRESS. SHOP 300 FIELD Per Code	PSIG
13. MATERIAL SPECIFICATIONS:	
(a) SHELL SA-516-70	
(b) HEADS	
(c) [illegible]	
(d) NOZZLE NECKS & PIPE SA-106-B	
(e) FLANGES (EXTERNAL) SA-105 Per Code	
(f) COUPLINGS (SCREWED/[illegible]) SA-181-1	
(g) GASKETS 1/8" THK. ASBESTOS JM #40 or EQUAL	
(h) BOLTING (EXTERNAL) SA-193-B7/SA-194-2H	
(i) INTERNALS C.S.	
(j) SUPPORTS C.S.	
(k) EXTERNAL APPURTENANCES C.S.	
14. M.H. [illegible] FURNISH W/ [illegible] COVER, STUDS & GASKET	
15. PAINT PER SP– 647820-80-5 (BY CAB.)	
16. INSULATION (BY OTHERS) HOT/COLD None — NO. OF LAYERS — TOTAL THK.	
17. FIREPROOFING (BY OTHERS) [illegible] LEGS — THK. — MATL. — SQ. FT. — CU. FT.	
18. INSPECTION BY — CLIENT/FLUOR	

CONNECTION SCHEDULE

MARK	NO. REQD.	SIZE	RATING	FACING	DESCRIPTION
N-1	1	6"	150	RF	PSV
N-2	1	2"			BYPASS / PUMP RELIEF
N-3	1	6"			VENT
N-4	1	8"			FILL
N-5	1	3"			DRAIN
N-6	1	10"			PUMP SUCTION
N-7	1	1½"			P.I.
N-8	3	1½"			T.W.T.I.
N-9	1	1½"			L.T. L.I.
N-10	1	1½"			L.T. L.I.
N-11	1	1½"			L.T. L.I.
N-12	1	8"	150	RF	VAPOR
M-1	1	20"	150	RF	MANWAY

NOZZLE PROJECTIONS ARE FROM ℄ OF VESSEL TO EXTREME FACE OF FLANGE EXCEPT AS NOTED:
FOR & SMALLER
FOR TO INCLUSIVE
FOR & LARGER

ESTIMATED VESSEL WEIGHTS
FABRICATED BY FABRICATOR LB.
EMPTY (LESS OPER. LIQUID) LB.
OPERATING LB.
FULL OF WATER LB.

PROCESS ENGR. APP. RS Lemmon DATE 9/9/1975
INSTRUMENT ENGR. APP. [illegible] DATE 9/15/75
INSTRUMENT APPROVAL CONSISTS OF CHECKING SIZE & ELEV. OF INSTRUMENT CONNECTIONS.
PURCHASE ORDER NO. 647820-6-0107
FABRICATOR C.B.&I.

STAIRWAY ORIENTATION

REVISION DESCRIPTION	DRAWN	CHECK	APP.	DRAWING NO.	REFERENCE DRAWING – CONTRACT NO. 647820
DWG. REV. REC. SHT.	JM	JM			
DWG. REV. REC. SHT.	JM	JM			
DWG. REV. REC. SHT.	JM	JM			
DWG. REV. REC. SHT.	JM	JM			
DWG. REV. SHT. 1 & 2	JM	JM		00-2-4001	MANWAY DAN'T DETAILS

FLUOR

DRAWN BY M. HORTENSTINE
CHECKED BY Lew 9/9/75
SUPERVISOR — VOLTAGE DATE
SUPERVISING ENGR. J.B. REVIS — DIVISION 126
PROJECT ENGR. G. Mankin — APP. DATE 9/9/75

150-BUTANE/N-BUTANE STORAGE 88-TK-2
NEW LIGHT-ENDS STORAGE FACILITIES
HIGH SULFUR CRUDE FACILITIES
CHAMPLIN PETROLEUM Co. CORPUS CHRISTI, TEX

SCALE NONE
DRAWING NUMBER 647820-88-2-402
REVISION 5

TANK 172

FF 0066961

FF 00669

G-21

ALL RIB RADII ARE $\frac{1}{4}$"

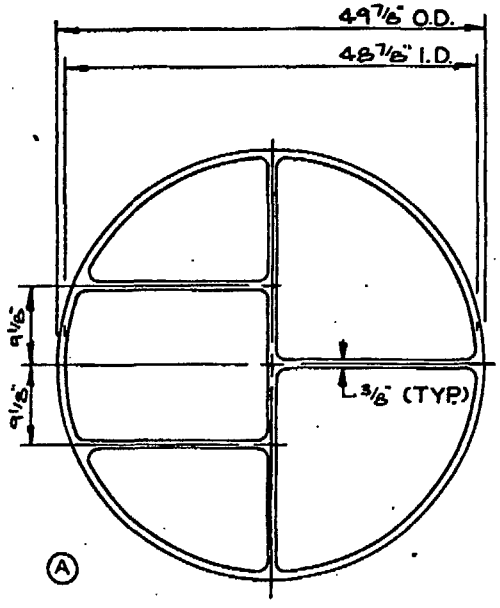

CHANNEL COVER GASKET

ONE REQ'D.

$\frac{1}{8}$" THK. ARMCO IRON JACKETED ASBESTOS FILLED

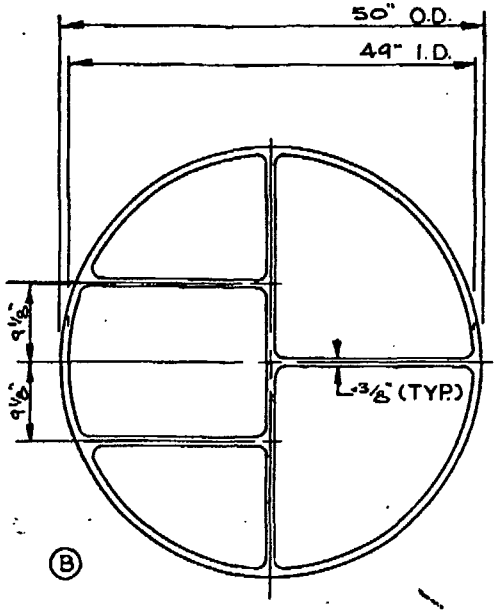

CHANNEL GASKET-SHELL END

ONE REQ'D.

$\frac{1}{8}$" THK. ARMCO IRON JACKETED ASBESTOS FILLED

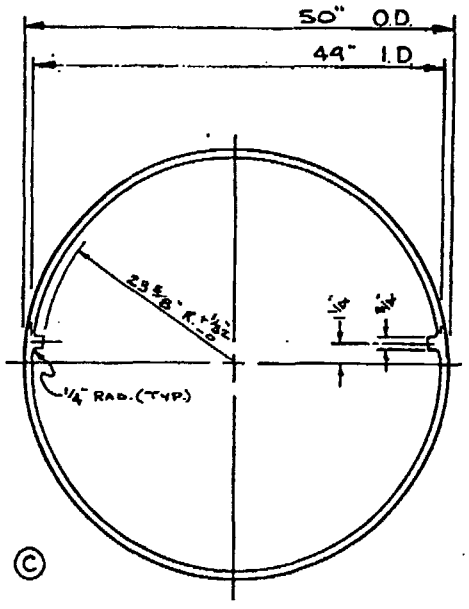

SHELL GASKET

ONE REQ'D.

$\frac{1}{8}$" THK. ARMCO IRON JACKETED ASBESTOS FILLED

REQ'D. AS NOTED FOR ONE SET

83-E-33

	W-722-2 ONE SET	WESTERN SUPPLY COMPANY TULSA, OKLAHOMA GASKET DETAILS J.E. 2-17-75 47" x 16' NONE AFU DWG NO W-722-2-JC

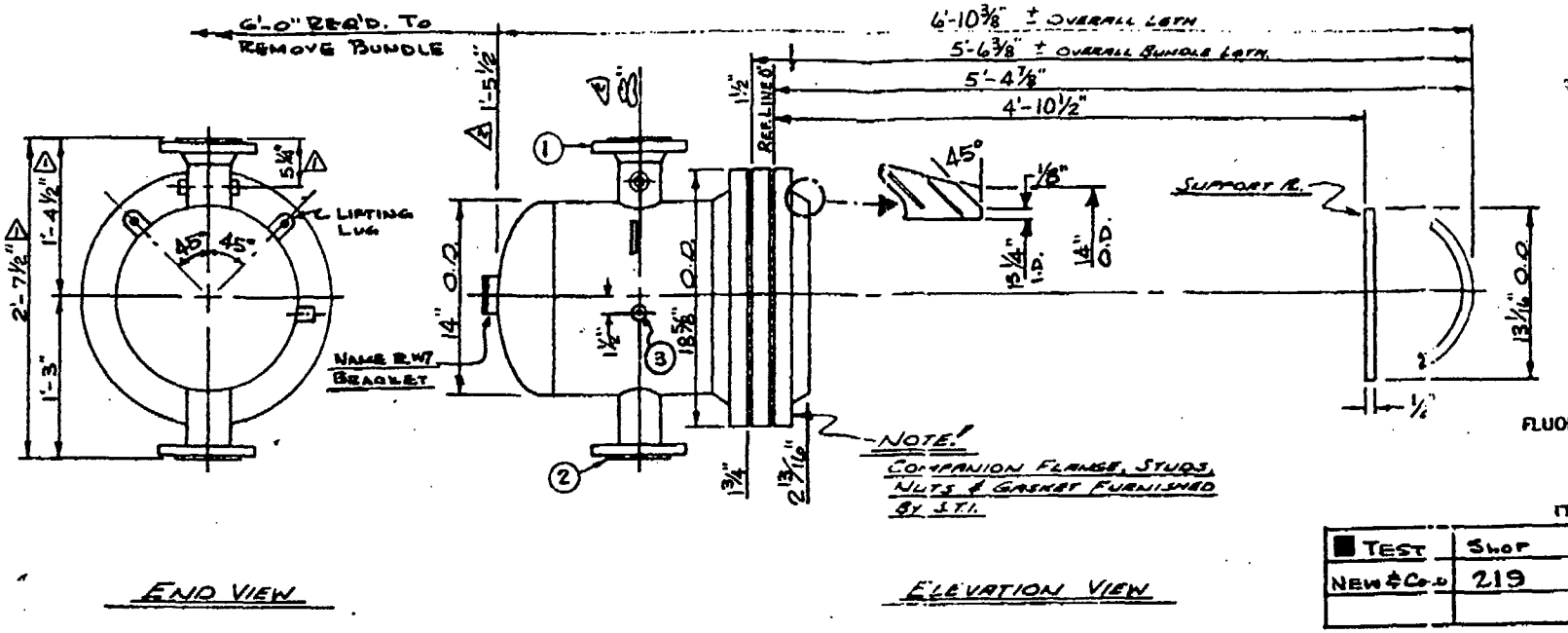

FLUOR ENGINEERS

647820

ITEM 4

TEST	SHOP	FIELD
NEW & CLD	219	190

NOTE:
ALL DIMENSIONS FROM REF LINE 0" (FACE OF FLG.)

***STRESS RELIEVE U-BENDS FOR 1-HOUR @ 1100°F.
** TUBESHEET LIMITED TO 330 P.S.I.G.
* 125 RMS ON GASKET SURFACE

SPECIFICATIONS			MARK	PURPOSE	SIZE	AUX. CPLGS
ASME CODE SECTION VIII ℄1 STAMP			(1)	*CHAN. INLET	3"-150# RF-WN	1/4"-6000# SW (N.S.) 1"-6000# SW (O.S.) ⚠
TEMA CLASS "R" - SPOT X-RAY CHAN.			(2)	*CHAN. OUTLET	1"-150# RF-WN	NONE
HEAT TREAT CHAN. & U-BENDS***	SHELL	TUBES	(3)	VENT	1"-6000# CPLG. (P.T.)	⚠
DESIGN PRESSURE - PSIG		125**				
TEST PRESSURE - PSIG		190 ■				
DESIGN TEMPERATURE - °F		520				
CORR ALLOWANCE - INS		1/8				
NUMBER OF PASSES		2				
TUBES - 37 - 3/4" OD x 14 BWG (MIN.) x 5'-2" S.L.						
TUBE MATERIAL = SA-179 (KILLED)						
TUBE PITCH - 1" □ SURFACE 79 SQ. FT.						
EXCHANGER MATERIAL = CARBON STL (KILLED)						
GASKET MATERIAL = *						
ALL BOLT HOLES TO STRADDLE ℄'S.						
PAINT = NONE						

REV.	DATE	BY	CK	DESCRIPTION
1 ⚠	4-21-75	PD	LB	REV. PER CUSTOMER
2 ⚠	6-20-75	BJ	LB	REV. PER S.T.I.

HAMPLIN PETROLEUM
HIGH SULFUR CRUDE
CORPUS CHRISTI, TEXAS

*TUBE SIDE: ARMCO IRON DOUBLE JACKETED ASBESTOS FILLED ⚠
SHELL SIDE: TEFLON TYPE SPIRAL WOUND MONEL (TWO SPARE SET REQUIRED.) ⚠

=CUSTOMER=
FLUOR ENGINEERS & CONSTUCTORS, INC.

PURCHASE ORDER NO.
647820-4-0433-03

EST. WEIGHTS
DRY 300 WET 1050 BUNDLE 4250

CERTIFIED FOR CONSTRUCTION
DATE FEB 27, 1975
BY Elroy Rankin

SHELL & TUBE INC
PO BOX 45364

DATE: 11/20/75 | DRAWN: [illegible] | CHECKED: T
NO. REQ'D: ONE | SIZE: 13-62
ITEM: 83-E15 | SERVICE: HF STRIPPER

DIMENSIONAL OUTLINE

HEAT EXCHANGER SPECIFICATION SHEET

Customer: Pontiac Refining Corp.		Date: 1-1-67
Plant Location: No. 2 Platforming Unit		Year Built: 1957
Manufacturer: Western Supply Co.		Installed: 1957
Service of Unit Rerun Column Bottoms Cooler		Serial No: E-1759
		Item No: 2PE-9
Size: 22" x 16'	Type: Floating Head	Connected in:
Sq. Ft. per Unit: 1035	Shells per Unit: 1	Sq.Ft./Shell: 1035

PERFORMANCE OF ONE UNIT

	Shell Side	Tube Side
Fluid Circulated:	Hvy. Cat Cracked Gasoline	Cooling Water
Total Fluid Entering:	71,000 lb/hr.	62,000 lb/hr. 124 GP
Vapor		
Liquid	71,000 lb/hr.	62,000 lb/hr. 124 GP
Steam		
Non Condensables		
Fluid Vaporized or Condensed:		
Steam Condensed:		
Gravity:	47°API .7927 @ 60 °F	.9953 @ 90 °F
Viscosity:	0.37 Cp @ 133 °F	.77 Cp @ 90 °F
Molecular Weight:		18
Specific Heat:	BTU # °F	1.00 BTU # °F
Latent Heat Vapors:	BTU #	BTU #
Temperature In:	160 °F	90 °F
Temperature Out:	105 °F	120 °F
Operating Pressure:	65 #/Sq.In.	30 #/Sq.In.
Number of Passes:	2	8
Velocity:	Ft./Sec.	3.1 Ft./Sec.
Pressure Drop:	9 #/Sq.In.	8 # Sq.In.
Fouling:	.001	.002

Heat Exchanged:- BTU/Hr. 1,858,000 M.T.D. Corr. 22.6 °F

Transfer Rate:- Service 79 Clean

FF 0059607

CONSTRUCTION

Design Pressure:	150 #/Sq.In.	75 #/Sq.In.
Test Pressure:	225 #Sq.In.	115 #/Sq.In.
Design Temperature:	250°F	250 °F
Tubes: B-111, Inh. Adm.	No.330 OD 3/4" BWG 16 Min	Length 16'0" Pitch 15/16
Shell: A-285-C, Steel	ID 21¼" OD 22"	Thickness 3/8"
Shell Cover: A-285-C Steel		Fltg.Head Cover A-20
Channel: A-285-C Steel		Channel Cove A-212-B
Tube Sheets:- Stationary B-171 N.R. Brass		Floating B-171 N.R. B
Baffles:- Cross A-7 Steel	Type Segmental	Thickness 13/16"
Baffle:- Long A-7 Steel	Type Expandable	Thickness 14 Ga.
Tube Supports: A-7 Steel		Thickness 1"
Gaskets: Metal Jacketed Asbestos		
Connections: Shell - In 4" Out 4"		Series 150 lb. RF
Channel - In 4" Out 4"		Series 150 lb. RF
Corrosion Allowance:- Shell Side 1/8"		Tube Side 1/8"
Code Requirements: API ASME & TEMA "R"		
Weights:- Each Shell 7500 lb.	Bundle 3800 lb.	Full of Water 10800

REMARKS: Long Baffle Packing 1/2" Sq. Braided Graphite Asbestos

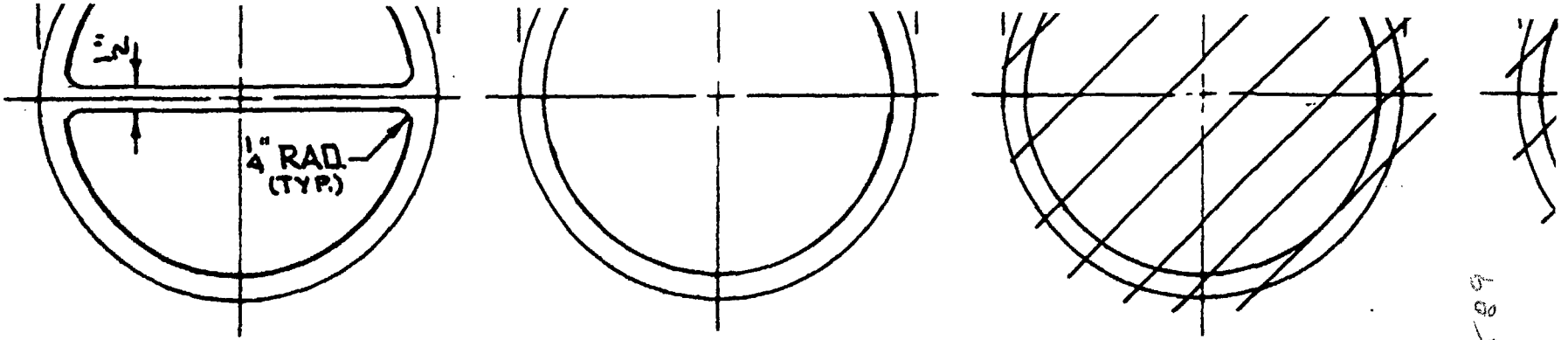

⊛ 1-REQ'D. CHAN COV. GSKT. 1/8" THK. ARMCO IRON DBL. JACKETED ASBESTOS FILLED

⊛ 1-REQ'D. CHAN. GSKT. 1/8" THK. ARMCO IRON DBL. JACKETED ASBESTOS FILLED

~~1-REQ'D. SHELL GSKT. 1/8 THK. ARMCO IRON JACKETED ASBESTOS FILLED~~

⊛ JM-60 EQUAL MA
(FILLER)

U

DIVISION W

PHT.

MFG BY WANER CORPORATION TULSA OKLAHOMA U.S.A.

SHELL SIDE W.P P.S.I	200	AT °F	216	
TUBE SIDE W.P P.S.I	85	AT °F	170	
MFG. NO. SERIAL	*	YEAR BUILT	1975	
USERS EQUIP NO	**	USERS ORDER NO	647820-4-0429	

LEAN AMINE COOLER

HYDRO TEST: SHELL, 300 PSIG.-TUBE 128 PSIG.

2 NAME PL'S. REQ'D.
* SER. NO. ** EQUIP. NO.
X4-2381A — 42-E-2A
X4-2381B — 42-E-2B

APPROVED
EXCEPT AS NO.
NO RESPONSIBILITY ASSUMED FOR ACCURACY OF SHOP DIMENSIONS
BY DATE
FLUOR ENGINEERS & CONSTRUCTORS, INC.

ALL RIB RADII ARE $\frac{1}{4}$"

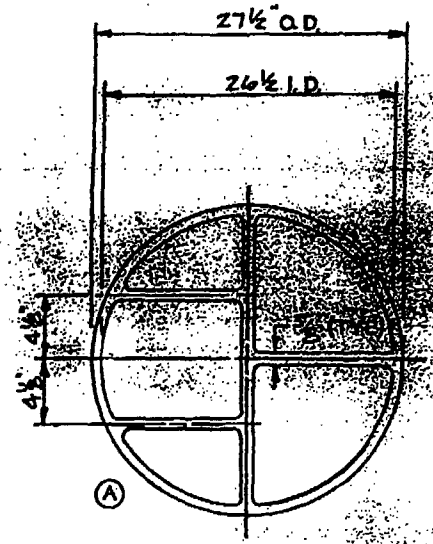

CHANNEL COVER GASKET

ONE REQ'D.

$\frac{1}{8}$" THK ARMCO IRON

JACKETED ASBESTOS

FILLED

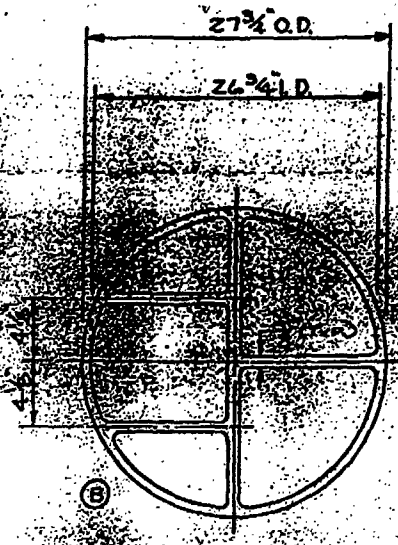

CHANNEL GASKET

ONE REQ'D.

$\frac{1}{8}$" THK ARMCO IRON

JACKETED ASBESTOS

FILLED

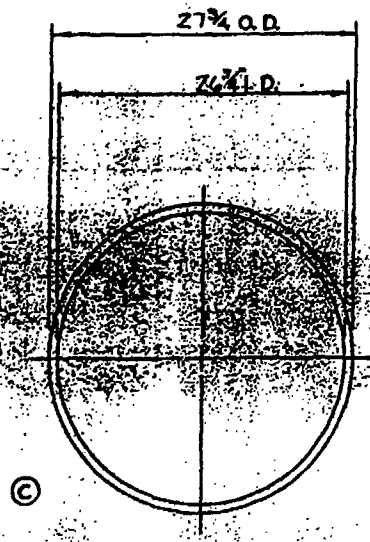

SHELL GASKET

ONE REQ'D.

$\frac{1}{8}$" THK. ARMCO IRON

JACKETED ASBESTOS

FILLED

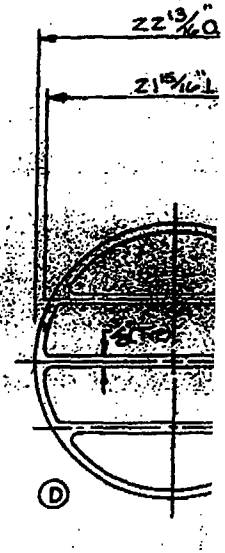

FLOATING HEA

ONE REQ

$\frac{1}{16}$ THK ARMCO

SOLID

(DEAD SOF

95 BHN (N

REQ'D. AS NOTED
FOR ONE SET

REV	DESCRIPTION	DATE						
					W-636-4	ONE SET	WESTERN SUPPL	
							TULSA, OKLAH	
							GASKET DETA	
							DR J.E.	DATE 10-2-74	SIZE 44"xZ
							CH EJC/DK	APPR NONE	TYPE A.K

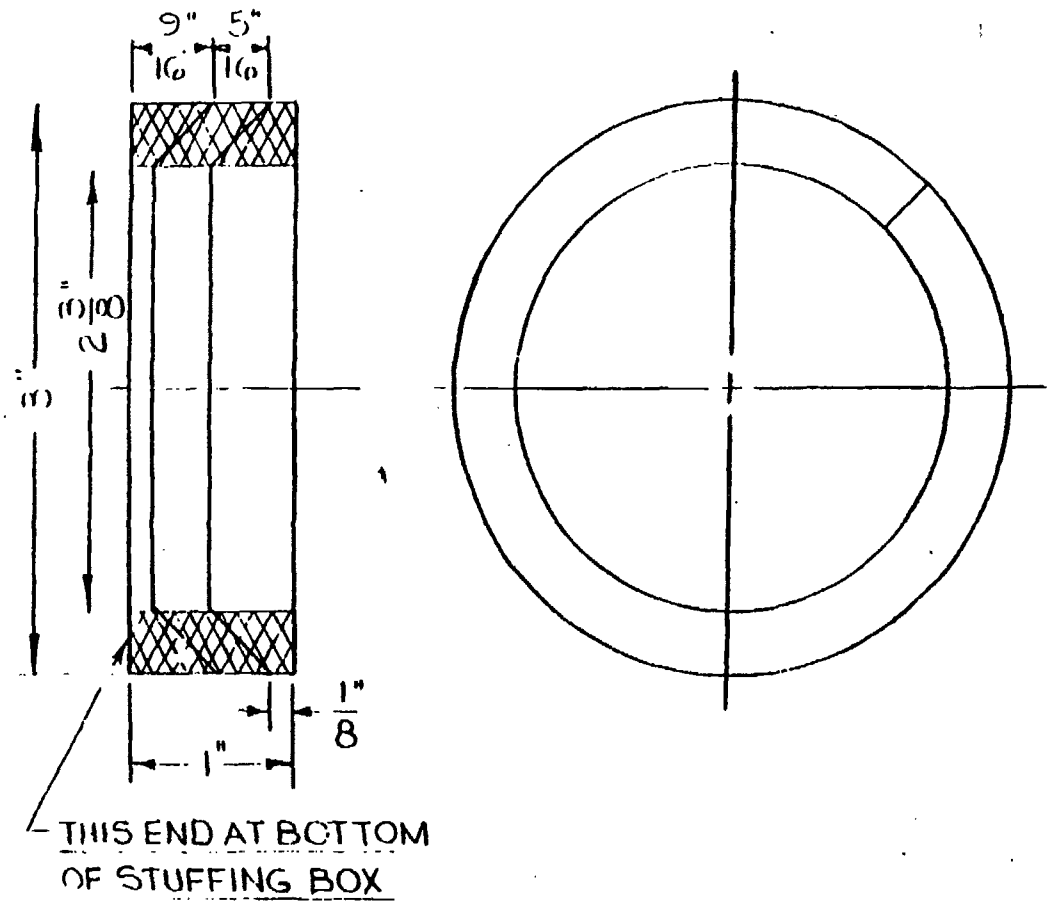

3 RINGS

SPECIFICATION ⟨2⟩

JOHN CRANE 187-IX BRAIDED ASBESTOS, WITH CORROSION INHIBITOR AND PARAFFIN DIP AND INCONEL WIRE INSERT AROUND RESILIENT DRY ASBESTOS CORE IMPREGNATED WITH GRAPHITE. WITH INHIBITOR IN CORE LUBRICATED THROUGHOUT AND COMPLETELY SURFACED WITH ANTIFRICTIONAL DRY GRAPHITE LUBRICANT.

REVISION				
NO.	DESCRIPTION	DATE	REV. BY	CK'D. BY
1	DELETED P-3 FROM TITLE PER ENG CHG 5123	7-20-71	[illegible]	[illegible]
2	RING IDENTITY NO'S. 187-IX WAS 187-I AND ADDED "CORROSION INHIBITOR AND PARAFFIN DIP AND" TO SPECIFICATION. PER ENG. CHG. # 6463	2-27-81	G. S. C.	[illegible]

UNLESS OTHERWISE SPECIFIED DIMENSIONS ARE IN INCHES
TOLERANCES ARE:

FRACTIONS	DECIMALS	ANGLES
± 1/64	± .005	± 2 1/2°

FF 0038621

BLAW-KNOX COMPANY
COPES-VULCAN DIVISION
ERIE, PENNSYLVANIA

FOR: PN-3 & DN-4 ROTARY HEAD EXT.

PACKING SET
FOR STEAM SERVICE

DRAWN R.S	DATE 4-3-64	JOB NO.
CHECKED [illegible]	DATE 4-14-64	
APPR.	DATE	SCALE 12" = 1'-0"

FOLIO

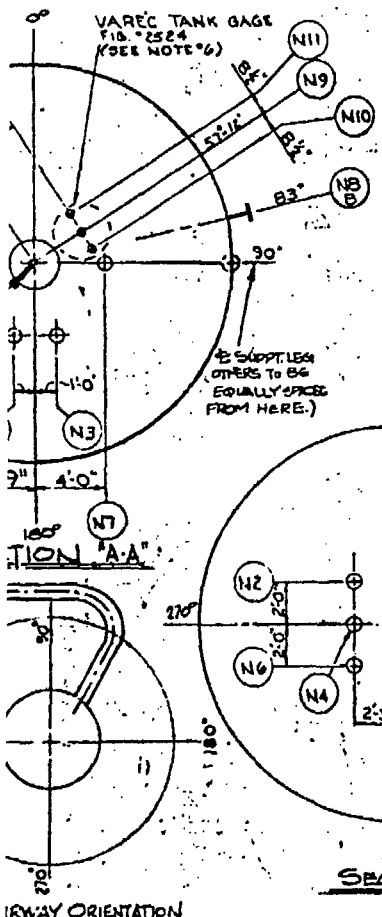

THE DESIGN DATA IS APPLICABLE UNLESS SPECIFIED OTHERWISE IN NOTES OR DETAILS.

NOTES:
1. VESSEL FABRICATOR SHALL FURNISH AND INSTALL ALL PARTS UNLESS SPECIFIED OTHERWISE.
2. FABRICATOR TO FURNISH SPIRAL GRATING STAIRWAY & HANDRAIL @ THE TOP (GALVANIZED)
3. FABRICATOR TO MAGNETIC PARTICLE INSPECT ALL NOZZLES & MANWAYS AFTER SHOP OR FIELD WELDING.
4. FABRICATOR TO SPECIFY MAX. EXTERNAL PRESSURE OF THE SPHERE @ 500° F.
5. SPECIFIC GRAVITY OF LIQUID STORED = 0.55/0.57
6. VAREC TANK GAUGE TO BE FURNISHED & INSTALLED BY FABRICATOR W/ VAREC #2800 ADAPTOR KIT & 1½" TEFLON PLUG GATE VALVE (FIG 275).

DESIGN DATA

1. DESIGN BASIS: SP–	& ASME VIII DIV.
2. STAMPING REQUIREMENTS: YES	
3. SPECS: SP. 42.1, 42.2, 2A, 2G, 42.7	
4. DESIGN PRESSURE: 100 PSIG, TEMP. 132	°F
5. OPER. PRESSURE: 40 PSIG, TEMP. 80	°F
6. POSTWELD HEAT TREATMENT @ PER CODE SP–	HOURS
7. WELD EXAMINATION: 100% PER FAB	
8. JOINT EFFICIENCY: SHELL 100% PER FAB %, HEADS —	%
9. NOMINAL CORROSION ALLOWANCE: SHELL 1/16" HEADS NOZZLE NECKS 1/16"	
10. M.A.W.P./@ DESIGN TEMP. PER CODE	PSIG
11. BASIS FOR CALCULATED TEST PRESS. PER CODE	PSIG
SHOP/FIELD TEST LIMITED BY:	
12. HYDRO-TEST PRESS. SHOP PSIG FIELD PER CODE	PSIG
13. MATERIAL SPECIFICATIONS:	
(a) SHELL SA-516 70	
(b) ~~HEADS~~	
(c) ~~FLANGES (EXTERNAL)~~	
(d) NOZZLE NECKS & PIPE SA-106 B	
(e) FLANGES (EXTERNAL) SA-105 PER FAB	
(f) COUPLINGS (SCREWED/SOCKET-WELD) SA-181-1	
(g) GASKETS 1/16" THK. ASBESTOS JM #60 OR EQUAL	
(h) BOLTING (EXTERNAL) SA-193 B7/SA-194-2H	
(i) INTERNALS C.S.	
(k) SUPPORTS C.S.	
(l) EXTERNAL APPURTENANCES C.S.	
14. M.H./~~REC.~~ FURNISH W/ PNEUMATICALLY DAVITED COVER, STUDS & GASKET	
15. PAINT PER SP– 647820-80-3 (BY FAB.)	

16. INSULATION (BY OTHERS) HOT/COLD None	NO. OF LAYERS	TOTAL THK.

17. FIREPROOFING (BY OTHERS) ~~PERIMETER~~ LEGS	THK.	MATL.	SQ. FT.	CU. FT.

18. INSPECTION BY CLIENT/FLUOR

CONNECTION SCHEDULE

MARK	NO. REQD	SIZE	RAT'NG	FAC'ING	DESCRIPTION
N-1	1	6"	150#	RF	P.S.V.
N-2	1	2"			BYPASS / PUMP RELIEF
N-3	1	6"			VENT
N-4	1	8"			FILL
N-5	1	3"			DRAIN
N-6	1	10"			PUMP SUCTION
N-7	1	1½"			P.I.
NB (4 REQ)	3	1½"			T.W.T.I.
N-9	1	1½"			L.T. L.I.
N-10	1	1¼"			L.T. L.I.
N-11	1	1¼"			L.T. L.I.
N-12	1	8"	150#	RF	VAPOR
M-1	1	20"	150#	RF	MANWAY

NOZZLE PROJECTIONS ARE FROM ℄ OF VESSEL TO EXTREME FACE OF FLANGE EXCEPT AS NOTED: FOR ___ & SMALLER; FOR ___ TO ___ INCLUSIVE; FOR ___ & LARGER

ESTIMATED VESSEL WEIGHTS
FABRICATED BY FABRICATOR LB.
EMPTY (LESS OPER. LIQUID) LB.
OPERATING LB.
FULL OF WATER LB.
LB.

PROCESS ENGR. APP. RJ Leonetti DATE 9/3/1975
INSTRUMENT ENGR. APP. [illegible] DATE 9/5/75
INSTRUMENT APPROVAL CONSISTS OF CHECKING SIZE & ELEV. OF INSTRUMENT CONNECTIONS.
PURCHASE ORDER NO. 647820-4-0107
FABRICATOR C.B.I. (172)

THIS DRAWING HAS BEEN PUBLISHED AND IS THE SOLE PROPERTY OF FLUOR ENGINEERS AND CONSTRUCTORS, INC. AND IS LENT TO THE RECIPIENT FOR HIS CONFIDENTIAL USE ONLY, AND IN CONSIDERATION OF THE LOAN OF THIS DRAWING, THE RECIPIENT AGREES TO RETURN IT UPON REQUEST. NO COPY OF THIS DRAWING OR ANY PART THEREOF SHALL BE MADE WITHOUT THE PRIOR WRITTEN CONSENT OF FLUOR ENGINEERS AND CONSTRUCTORS, INC. AND SHALL NOT BE USED FOR ANY PURPOSE OTHER THAN THAT FOR WHICH IT IS FURNISHED.

FORM E-476 REV. 4/74 PRINTED IN U.S.A.

RWAY ORIENTATION

DRAWN	CHECK	APP.	DRAWING NO.	REFERENCE DRAWING – CONTRACT NO. 647820
			00-2-4001	MANWAY DAVIT DETAILS

FLUOR

DRAWN BY: M. HORTENSTINE
CHECKED BY: RW 8/27/75
SUPERVISION RELEASE DATE
SUPERVISING ENGR. J.B. KANAS INITIALS JBK
PROJECT ENGR. G. MOSKO APP. DATE 9/9/75
CLIENT APP. DATE

130-BUTANE/N-BUTANE STORAGE TK-88-TK-2
NEW LIGHT-ENDS STORAGE FACILITIES
HIGH SULFUR CRUDE FACILITIES
CHAMPLIN PETROLEUM CO. CORPUS CHRISTI, TEX

SCALE	DRAWING NUMBER	REVISION
NONE	647820-88-2-402	15

M 0012717

M0012716