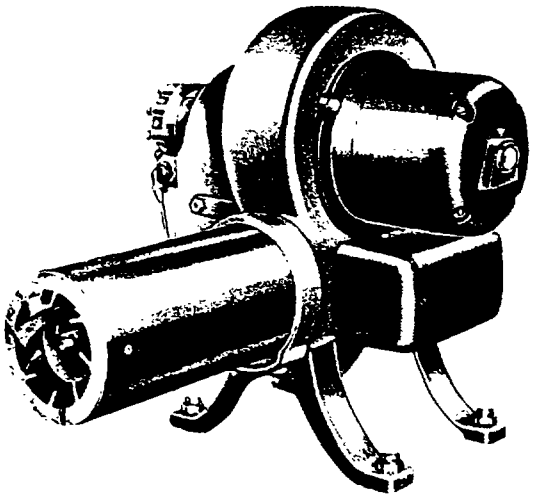

model L

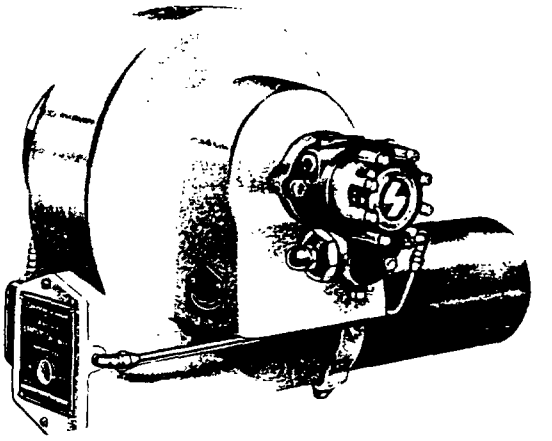

model LF-A

Constructed of rugged, corrosion-proof, time-proof cast iron, the Model L Arcoflame by American-Standard is a high-pressure, heavy-duty oil burner for flexible, dependable application with heating units in commercial buildings, apartments or large residences.

In addition to dependable durability, all Model L components—motor, transformer, fuel pump, firing mechanism—are carefully designed and integrated for the quietest possible operation over the entire firing range of 3 to 7 gallons per hour.

Model L burners also feature remarkably clean, economical fuel consumption—with quick starts and quick cut-offs that avoid waste. The two-stage fuel unit pumps air-free oil; the precision-built nozzle provides accurate atomization; primary air volume is accurately and easily controlled with a simple adjustment of the air shutter.

The Model L is available with either pedestal or flange mounting and is easily installed to convert any boiler or furnace within its capacity range to automatic oil-fired heating. A complete selection of versatile control combinations is available for all types of hot water, steam or warm air installations.

Thorough laboratory and factory testing programs for Arcoflame oil burners assure conformance to American-Standard requirements for peak operating performance.

model L

model LF-A

# Arcoflame oil burners

AMERICAN-Standard

PLAINTIFF'S EXHIBIT
ASI-249

## outstanding design features

- Method of fuel atomization – mechanical pressure – 100 pounds.
- Air supply – low pressure with squirrel cage fan.
- Ignition – intermittent or constant spark.
- Nozzle – hollow cone, 80° spray angle for 3 to 4½ gph; 60° spray angle for 5 to 7 gph. Each nozzle tested at factory.
- Two-stage fuel unit – standard equipment on the Model L.
- Controls – available for all types of hot water, steam or warm air requirements.

## dimensions (inches)

model L (bellhousing mounted)

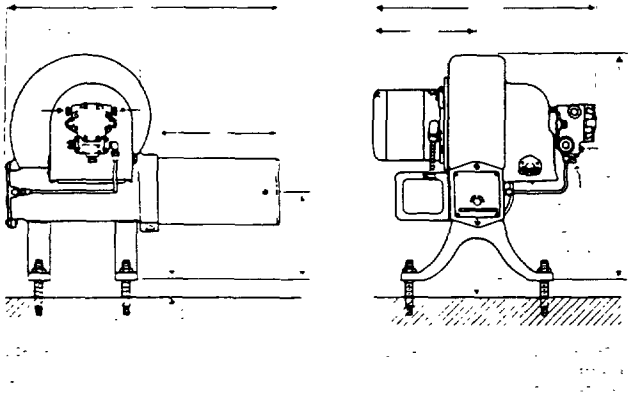

model LF-A (flange mounted)

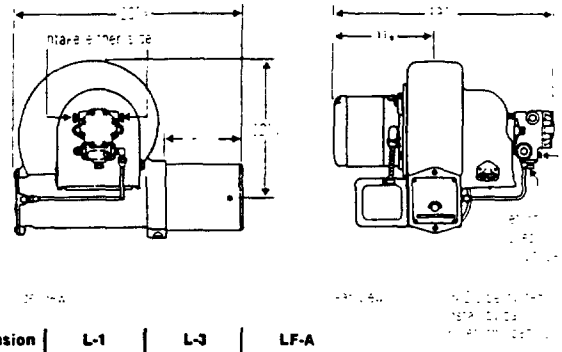

| dimension | L-1 | L-3 | LF-A |
|---|---|---|---|
| A | 24¾ | 34⅝ | 20⅜ |
| B | 11⅛ | 21 | 6¾ |

diameter air tube–6"

## specifications

models L and LF-A

| current characteristics | gallons oil per hour | | motor | | oil pressure |
|---|---|---|---|---|---|
| | minimum | maximum■ | hp | rpm | (psig) |
| 115 volt 60 cycle | 3.00 | 7.00 | ⅙ | 1,750 | 100 |

■ These capacities can be used up to 1,000 feet altitude. Reduce capacities by 4% for each additional 1,000 feet above sea level.

All Arcoflame Oil Burners (60 cycle, 115 volt) are listed by Underwriters' Laboratories, Inc. for No. 1 and No. 2 grades of fuel oil, distillate or catalytic cracked, and comply with Commercial Standard CS-75. They are approved by the New York City Board of Standards and Appeals, the State Fire Marshal of the Commonwealth of Massachusetts and the Department of State Police, State of Connecticut.

00057

AMERICAN-Standard PLUMBING AND HEATING DIVISION
AMERICAN RADIATOR & STANDARD SANITARY CORPORATION
40 WEST 40TH STREET • NEW YORK 18, NEW YORK

Form No. 299.2

Litho in U.S.A.