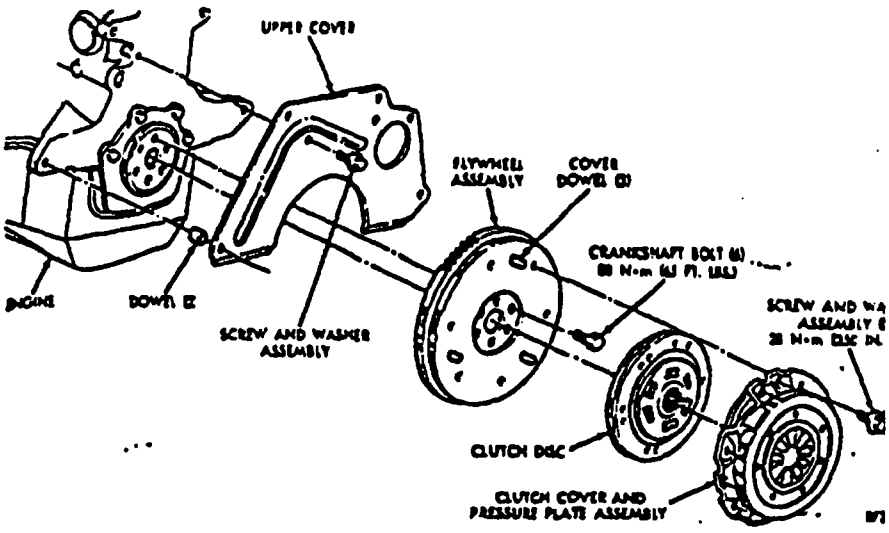

Fig. 3. A-460, A-465, and A-525 Manual Transaxle Clutch—Disassembled (2.2L Engine)

Removal and Installation

(1) Remove or install transaxle. See "Group 21, A-460, A-465, and A-525 Manual Transaxle," for procedure.

(2) Mark clutch cover and flywheel, to maintain their same relative positions when reinstalling clutch assembly.

(3) Insert clutch disc aligning tool C-4676 through the clutch disc hub to prevent the clutch disc from falling and damaging the facings (Fig. 4).

(4) Loosen or tighten clutch cover attaching bolts, one or two turns at a time, in succession, to avoid bending the cover flange (Fig. 2 or 3).

(5) Remove or install the clutch pressure plate and cover assembly and disc from flywheel. Handle carefully to avoid contaminating the friction surfaces.

(6) Remove or install clutch release shaft and slide release bearing assembly off the input shaft seal retainer.

(7) Remove or install the fork from the release bearing thrust plate (see "Release Bearing and Fork" section in Group 21).

(8) To reinstall, reverse the above procedure.

(9) Mount clutch assembly on flywheel, being careful to properly align dowels and the alignment marks made before removal. Apply pressure to the alignment tool to center the tip of the tool into the crankshaft and the sliding zone into the clutch fingers while snugging the clutch attaching bolts sufficiently to hold the disc in position.

(10) To avoid distortion of the clutch cover, should be tightened a few turns at a time alter until they are all seated. Tighten to 28 N·m (2 lbs.). Remove clutch disc alignment tool.

Cleaning and Inspection

CAUTION: When servicing clutch assemblies or

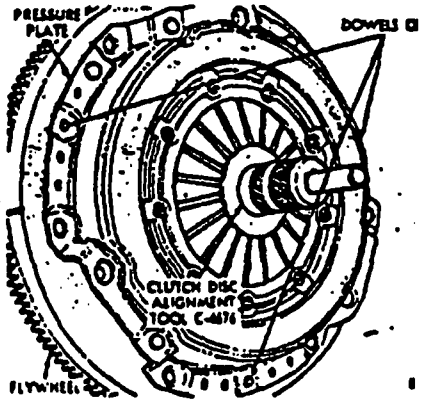

Fig. 4. A-460, A-465, and A-525 Manual Trans Clutch Disc Aligning Tool