AMERICAN STANDARD

G-2

gas fired boilers

hot water or steam

PLAINTIFF'S EXHIBIT

ASI-57

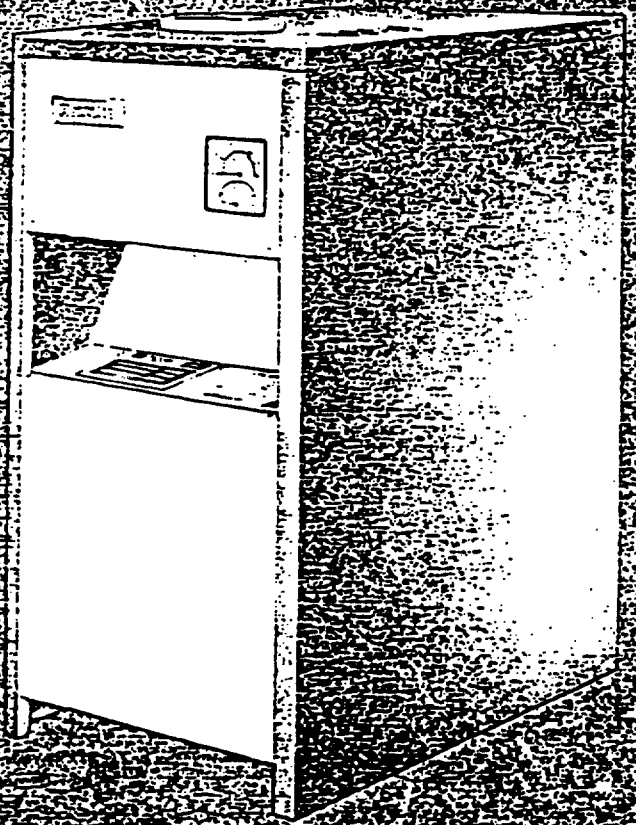

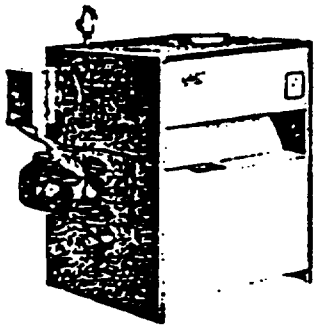

packaged deluxe jacket model for forced circulation

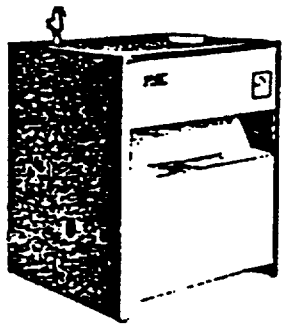

packaged all-purpose model for forced or gravity circulation

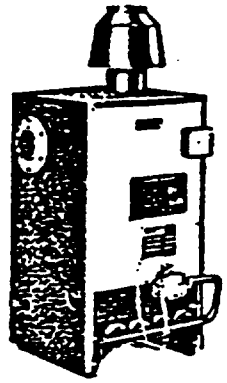

non-packaged all-purpose flush jacket model for forced or gravity circulation

G-2 cast-iron gas boiler—compact, economical, easy-to-install

The completely automatic G-2 gas fired boiler, for water or steam heating, provides fast, economical installation, operating efficiency and long-lasting dependability. Only 33½" high, the G-2 requires minimum space, making it particularly suitable for residential installations where space is at a premium.

Special "off the floor" jacket design prevents rust and corrosion, damage in shipment and allows boiler to be "walked" into position with jacket in place.

Packaged water or steam boiler—Five popular sizes (3-7 sections) of the forced circulation or steam packaged units are shipped completely assembled and crated, ready for immediate installation. All controls, burners, accessories—even the circulator (water only)—are installed and wired before shipment. Forced circulation water boilers (4-7 sections) may be equipped with a specially built, factory-installed, I=W=H rated tankless heater. The 3-7 section sizes are also furnished as an all-purpose package without the circulator to permit either forced or gravity installations.

Non-packaged water and steam boilers—Available in all sizes (3-11 sections) with flush or deluxe jacket as forced circulation water boiler or all-purpose steam or water (forced or gravity) boiler. Non-packaged boilers feature factory-assembled sections, pre-assembled manifold and pre-assembled gas controls. (Factory-installed I=W=H rated tankless heater available for forced circulation water boiler only.)

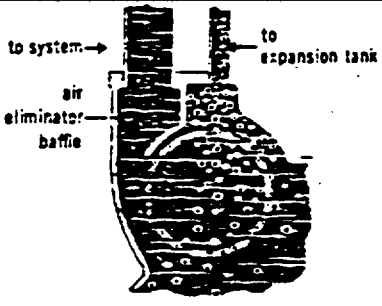

ELIMINAIRE®—is an exclusive cost-saving installation feature of the G-2. This unique built-in air eliminator is integrally cast into the left hand end section and is furnished on all boilers, specifically for hot water installations. The ELIMINAIRE® baffle diverts rising air bubbles into a tapping connected to the expansion tank. No external device is required to separate air and water—thus reducing both costs and installation time.

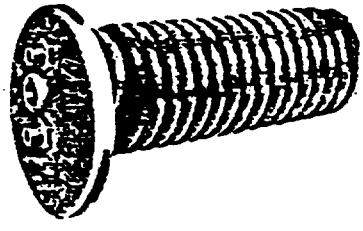

I=W=H rated, high capacity tankless water heater—is available in four sizes and factory-installed in boilers beginning with the 4-section size. Designed exclusively for forced circulation boilers, the water heater fits into the large, off-center, oversized 5" nipple port at the top of the boiler sections.

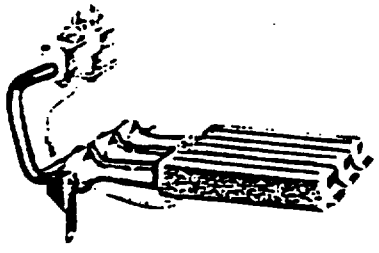

Complete factory-installed manifold and wiring—saves installation time and costs on all packaged models. One-piece burner-mixing tube is precision fitted into manifold spud and rests securely on rear boiler base plate. Simple regulation of the air shutter is the only adjustment required for correct firing. New drill port and ribbon-type burners improve performance.

G-2
gas fired boilers

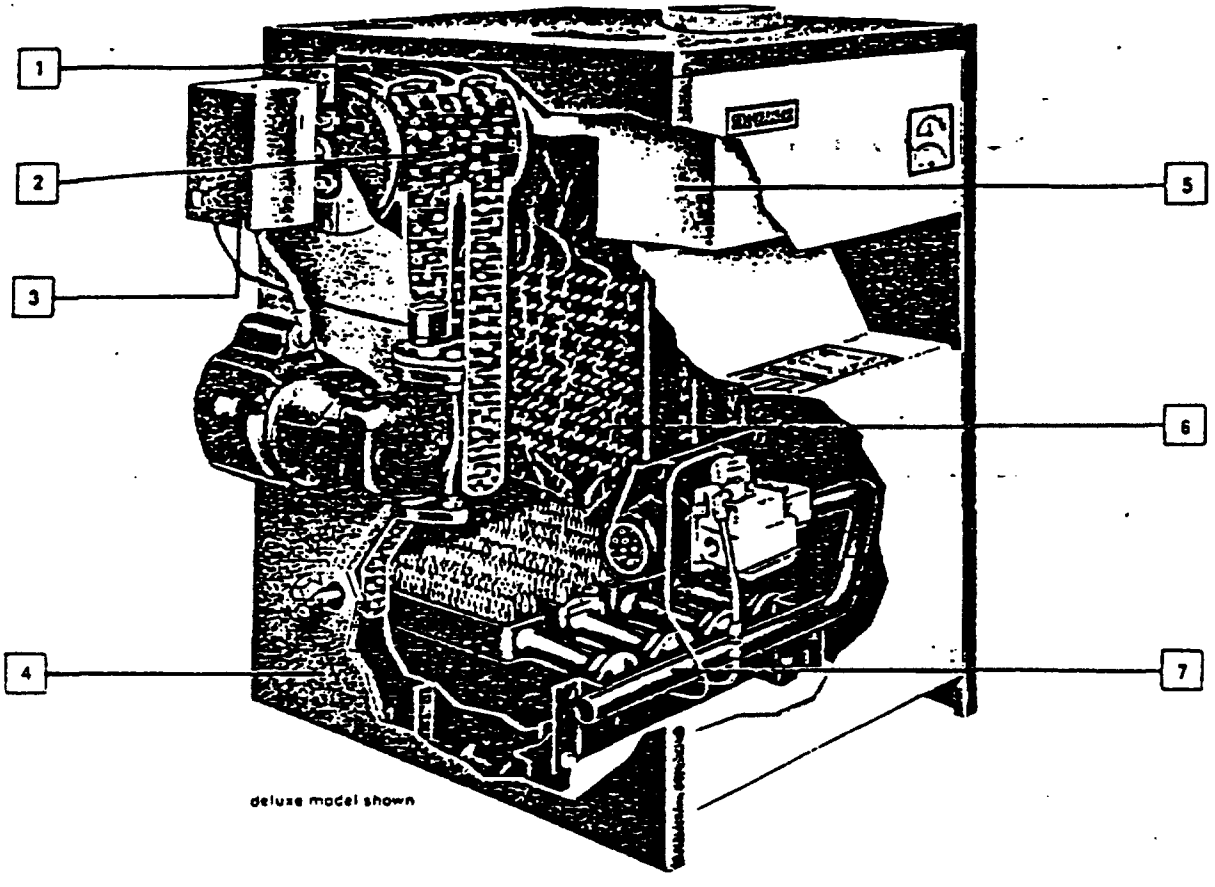

deluxe model shown

1—ELIMINAIRE® (not shown)—exclusive built-in air eliminator for hot water installations eliminates need for an external device to separate air and water.

2—water heater—large, copper coil, finned tubing tankless-type water heater has dependable I=W=H ratings.

3—controls—all controls are mounted on front and left side of boiler for easy accessibility. Controls, accessories and manifold are factory-mounted and assembled on all packaged boilers.

4—jacket—sturdy steel jacket is fully insulated with heavy glass fiber insulation to prevent wasteful heat loss and keep jacket cool. Jacket features attractive brown and beige finish with modern square-corner styling. It is shipped factory-installed on all packaged boilers.

5—built-in drafthood—completely enclosed in deluxe jacket models (except G-23)—keeps boiler height at an extra low 33½". External-type drafthood furnished on G-23-D and all flush models.

6—lifetime cast iron sections—have multiple pin-like projections for maximum heat extraction. End sections are extended at base to form supporting legs of boiler—eliminating the need for a separate base. Sections are water tested at 80 psi (2½ times rated capacity of relief valve).

7—factory-assembled manifold and controls—are installed on all packaged boilers. They are completely enclosed by the jacket on deluxe models.

ELIMINAIRE® is a trademark of AMERICAN STANDARD Inc.

American-Standard G-2 gas boilers have ratings approved by the Institute of Boiler and Radiator Manufacturers and are constructed to the specifications of the American Society of Mechanical Engineers. The boilers are design certified by the American Gas Association for all gases. They also have the design certified by A.G.A. for installation on combustible flooring with a special floor shield and for close clearance installations. All sizes of the G-2 are available in models for forced hot water, gravity and steam systems.

AMERICAN STANDARD
PLUMBING & HEATING DIVISION

G-2 ratings (all gases)

boiler number	for installations from sea level to 2000 ft •					chimney		water content (gallons)	
	A.G.A. ratings		net I=B=R ratings • •			diameter (inches)	height above draft-hood (feet)	water boiler	steam boiler
	input (Btu/hr)	output (Btu/hr)	water (Btu/hr)	steam (sq. ft.)	steam (Btu/hr)				
G-23	60,000	48,000	41,700	150	36,000	4	10	7.6	4.9
G-24	90,000	72,000	62,600	225	54,000	5	10	9.6	6.2
G-25	120,000	96,000	83,500	300	72,000	5	10	11.7	7.6
G-26	150,000	120,000	104,300	375	90,000	6	10	13.7	8.9
G-27	180,000	144,000	125,200	450	108,000	6	10	15.7	10.2
G-28	210,000	168,000	146,100	525	126,000	7	10	17.7	11.5
G-29	240,000	192,000	167,000	600	144,000	7	10	19.7	12.9
G-210	270,000	216,000	187,800	675	162,000	7	10	21.7	14.2
G-211	300,000	240,000	208,700	750	180,000	7	10	23.7	15.5

• For altitudes above 2000 ft., ratings should be reduced at the rate of 4% for each 1000 ft. above sea level.

• • Net I=B=R ratings shown are based on a piping and pick up allowance of 1.333 for steam and 1.15 for water. American Standard should be consulted before selecting a boiler for installations having unusual piping and pick up requirements.

built-in tankless heaters (optional)■

I=W=H ratings—(gpm)▲			
heater 218•	heater 222•	heater 226•	heater 232•
—	—	—	—
2½	—	—	—
—	3	—	—
—	3¼	—	—
—	3½	4	—
—	3½	4¼	—
—	3½	4¼	4½
—	3½	4¼	4¾
—	3½	4½	5

■ Heaters have been tested with G-2 boilers and are available only factory installed in the above sizes except for the all purpose boilers.

▲ Gallons water per minute heated from 40°F to 140°F with 200°F boiler water temperature.

• Last two digits designate lineal feet of Tru Fin tubing in heater coil. Domestic hot water connection size is ½" for all heaters.

Note: The following suffixes, if added to G-2 boiler number, represent: F—flush jacket; D—deluxe jacket; T—with tankless heater; P—packaged shipping; C—with floor shield approved for combustible flooring. For example—to order a deluxe G-25 complete with heater, combustible flooring shield and completely packaged—the following boiler designation would apply (G-25-DPTC).

standard equipment

all boilers

G-23 thru G-29 natural and LP gas
G-23 thru G-26 mixed gas

Lite Rite manifold gas valve including main operator, manual shut-off valve, pilot filter, pressure regulator (except LP gas) and Pilostat.

G-210 and G-211 natural and LP gas
G-27 thru G-211 mixed gas

Diaphragm gas valve; gas pressure regulator (except LP gas); manual main and pilot gas shut-off valves and combination safety pilot switch and valve.

Draft hood; drain valve; transformer (except S.E.).

additional standard equipment

all boilers

water

ASME relief valve; pressure and temperature gauge.

steam

ASME safety valve (top outlet); steam pressure gauge; gauge glass with trimmings; external resetting low water cut-off; radiation shield and floor pan; pressure limit control.

packaged—forced circulation only

with heater (DPT)

Tankless heater; circulator with piping; wiring harness; triple Aquastat (high and low limits, circulator relay); thermostat; Deluxe insulated jacket.

less heater (DP)

Circulator with piping; wiring harness; dual Aquastat (high limit and reverse acting low limit); thermostat; Deluxe insulated jacket.

additional standard equipment (cont.)

packaged—all purpose only (DPG)—water

Deluxe insulated jacket; immersion limit control.

packaged—steam (SPF or SPD)

Flush or Deluxe insulated jacket; thermostat.

non-packaged—all purpose

water (forced) with heater (WT)

Tankless heater; triple Aquastat (high and low limits, circulator relay); flush or deluxe insulated jacket.

water less heater (W)

Flush or Deluxe insulated jacket; immersion limit control.

steam (S)

Flush or Deluxe insulated jacket.

optional equipment

all boilers

Self-energizing controls; floor shield for combustible flooring; thermostats (24V. and S.E.) for packaged all-purpose and non-packaged boilers.

all steam boilers

Side outlet safety valve; electric water feeder (may be added to external low water cut-off to make combination low water cut-off and feeder).

For selection of built-in tankless heater for forced circulation, see ratings table above.

control tappings

forced circulation

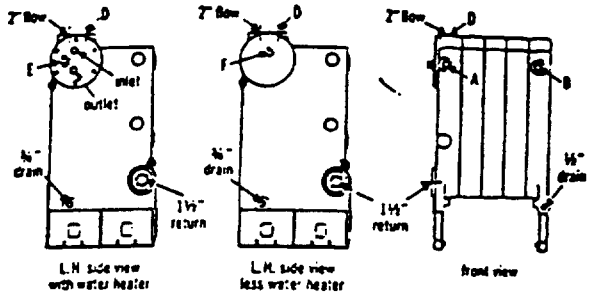

all-purpose

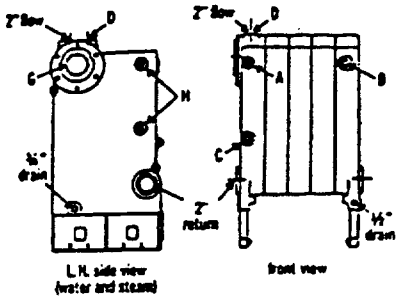

location on boiler	tappings size (inches)	water		steam
		forced	gravity	
A	¾	immersion limit control	immersion limit control	—
B	½	temperature and altitude gauge	temperature and altitude gauge	pressure gauge
C	¾	reverse acting control	—	—
D	¾	pressure relief valve (Eliminaire)	pressure relief valve	safety valve
E	¾	combination operating controls: high and low limit, relay control	—	—
F	¾	high limit, circulator operation control	—	—
G●	3	—	gravity flow	flow or blow-off
H	½	—	—	gauge glass

● G-23-DPS packaged boiler furnished with left end section without heater opening but tapped ¾" for combination control.

boiler number	natural gas	mxd. gas	LP gas
G-23	½	½	½
G-24	½	½	½
G-25	½	½	½
G-26	½	¾	½
G-27	½	¾	½
G-28	¾	¾	½
G-29	¾	¾	½
G-210	¾	¾	½
G-211	¾	¾	½

Note: Connection sizes shown apply to both flush and deluxe jacket assemblies.

G-2 boilers approved for installation in utility rooms, alcoves closets . . . anywhere

All G-2 boilers, used with natural or mixed gases, are A.G.A. design certified for closet installation. Tests show that temperatures of adjacent combustible surfaces will not be excessive when boiler is installed in a closet type enclosure with the specified minimum clearances. These clearances (see table, below) apply after considering the needs accessibility to the unit for adjustment, repair and replacement of parts. With the closet door open, there must be a minimum front clearance of 18 inches.

Note: Area of each opening —1 sq. in. for each 1,000 Btuh input with a minimum of 100 sq. inches.

flush jacket

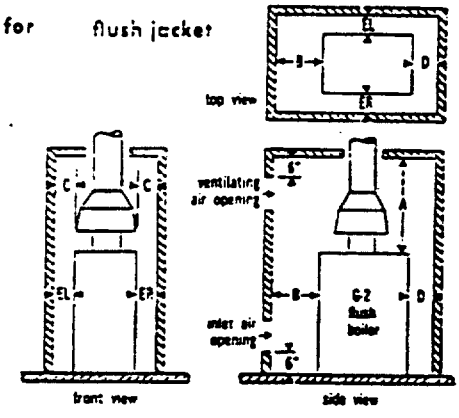

deluxe jacket

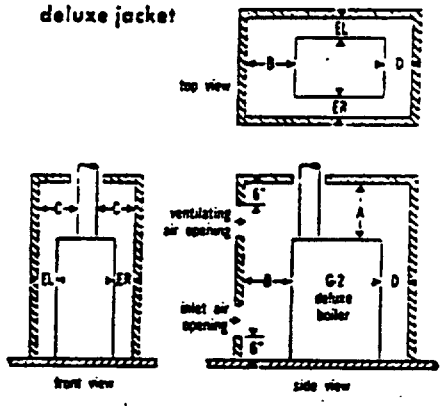

designation	symbol	minimum clearance—(inches) flush jacket									deluxe jacket
		G-23F	G-24F	G-25F	G-26F	G-27F	G-28F	G-29F	G-210F	G-211F	G-23D thru G-211D
from top of boiler	A	56	56	56	56	56	56	56	56	56	24
from front of boiler	B	6	6	6	7	7	8	8	9	9	6
from flue	C	6	6	6	6	6	6	6	6	6	6
from back of boiler	D	2	2	2	2	2	2	2	2	2	2
from left side	EL	5	4	2	2	1	1	1	1	1	0
from right side	ER	5	4	2	2	0	0	0	0	0	0

Approved on non-combustible floor and on combustible floor when equipped with bottom pan and radiation shield.

AMERICAN STANDARD

dimensions for inlets and outlets packaged boilers

deluxe jacketed model for forced circulation or steam•

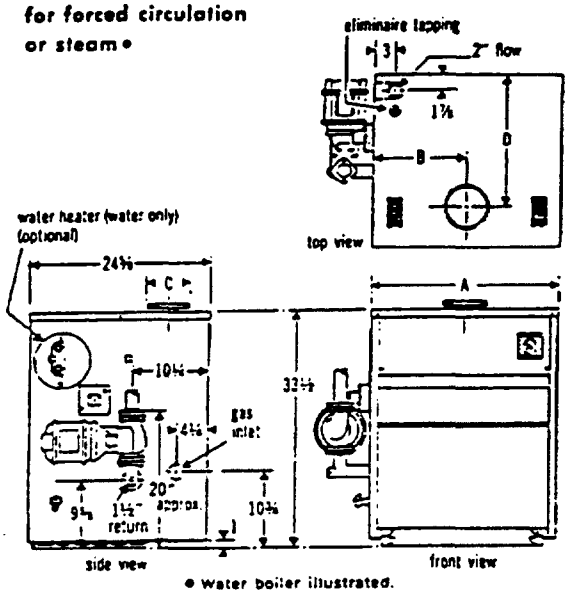

• Water boiler illustrated.

all-purpose deluxe jacketed model for water (forced or gravity circulation)

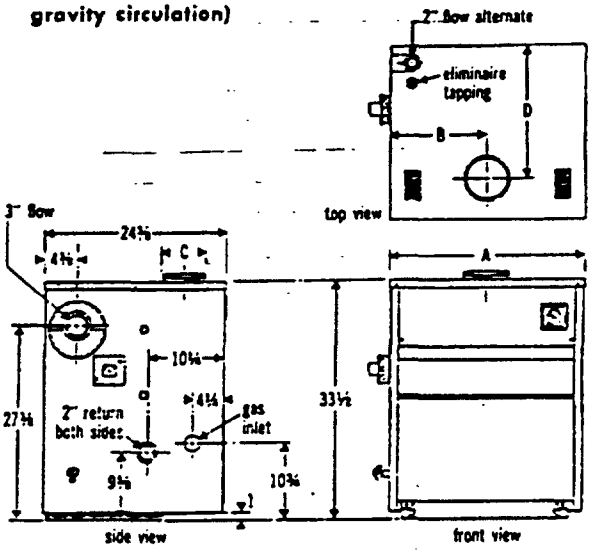

packaged boilers—dimensions (inches)

boiler number	number of sections	number of burners	A	B	C	D
G-23a	3	2	13⅛	6 X₆	4	11⅝
G-24	4	3	16⅛	8 X₆	5	19½
G-25	5	4	19⅝	9'X₆	5	19½
G-26	6	5	22⅛	11 ¼	6	19
G-27	7	6	25⅛	13 X₆	6	19

a Furnished with external vertical drafthood.

application

steam	G-2 boilers		G-2 all purpose boilers
	water—forced circulation		
packaged without tankless	packaged without tankless	packaged with tankless	packaged water
G-23-SPF or D	G-23-DP	—	G-23-DPG
G-24-SPF or D	G-24-DP	G-24-DPT	G-24-DPG
G-25-SPF or D	G-25-DP	G-25-DPT	G-25-DPG
G-26-SPF or D	G-26-DP	G-26-DPT	G-26-DPG
G-27-SPF or D	G-27-DP	G-27-DPT	G-27-DPG

Note: The suffixes used with G-2 boiler numbers denote the following: F—flush jacket; D—deluxe jacket; P—packaged shipment; S—steam; T—with factory-installed tankless heater; G—all purpose; C—with floor shield approved for combustible flooring (if desired, add to suffixes shown).

Note: Boilers specified without suffix "T" and G-23-DPG boilers, as shown in table above, are furnished with left end section without heater opening but tapped ¾" for combination control. Packaged Steam boilers are furnished with left end section with heater opening and cover plate and 3" flow or blow-off tapping.

dimensions for inlets and outlets non-packaged boilers

all-purpose deluxe jacketed model for water (forced or gravity circulation) or steam ●

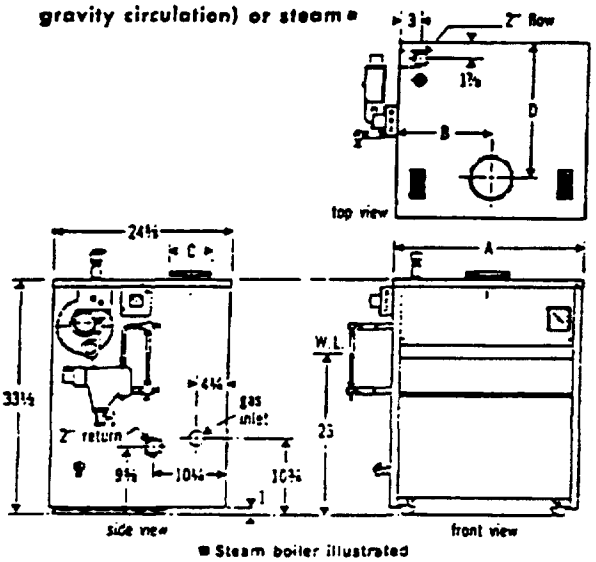

● Steam boiler illustrated

deluxe jacketed models — dimensions (inches)

boiler number	number of sections	number of burners	A	B	C	D
G-23▲	3	2	13⅛	6 X₄	4	11⅝
G-24	4	3	16⅜	8 X₄	5	19½
G-25	5	4	19⅝	9'X₄	5	19½
G-26	6	5	22⅞	11 X₄	6	19
G-27	7	6	26⅛	13 X₄	6	19
G-28	8	7	29⅜	14'X₄	7	19⅜
G-29	9	8	32⅝	16 X₄	7	19⅜
G-210	10	9	35⅞	17'X₄	8	19⅞
G-211	11	10	39⅛	19 X₄	8	19⅞

▲ Furnished with external vertical drafthood.

all-purpose flush jacketed model for water (forced or gravity circulation) or steam ●

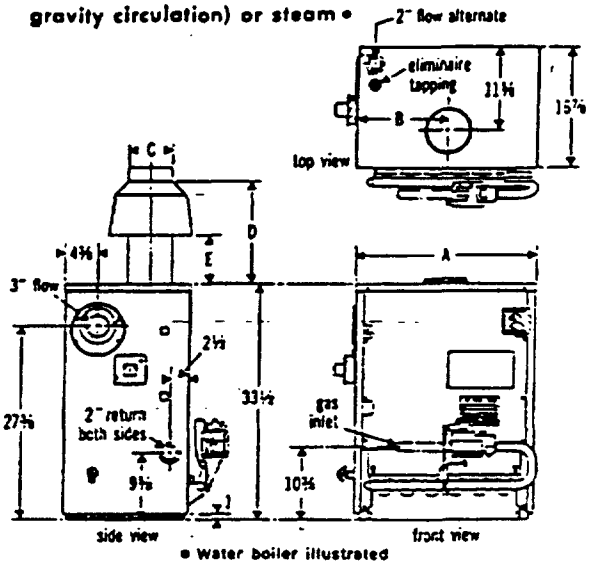

● Water boiler illustrated

flush jacketed models—dimensions (inches)

boiler number	number of sections	number of burners	A	B	C	D	E
G-23	3	2	11	5½	4	13	7
G-24	4	3	14¼	7⅛	5	13¾	7
G-25	5	4	17½	8¾	5	13¾	7
G-26	6	5	20¾	10⅜	6	16½	9
G-27	7	6	24	12	6	16½	9
G-28	8	7	27¼	13⅝	7	20¾	12
G-29	9	8	30½	15¼	7	20¾	12
G-210	10	9	33¾	16⅞	8	25¾	16
G-211	11	10	37	18½	8	25¾	16

application

G-2 all purpose boilers
non-packaged water or steam
G-23-■ S or W
G-24-■ S or W (T)
G-25-■ S or W (T)
G-26-■ S or W (T)
G-27-■ S or W (T)
G-28-■ S or W (T)
G-29-■ S or W (T)
G-210-■ S or W (T)
G-211-■ S or W (T)

Note: The suffixes used with G-2 boiler numbers denote the following: F—flush jacket; D—deluxe jacket; T—with factory-installed tankless heater; C—with floor shield approved for combustible flooring (if desired, add to suffixes shown).

■ Substitute letter "F" for flush or "D" for deluxe jacket.

Note: Boilers specified without suffix "T", as shown in table at left, are furnished with left end section with heater opening and cover plate.

near boiler piping

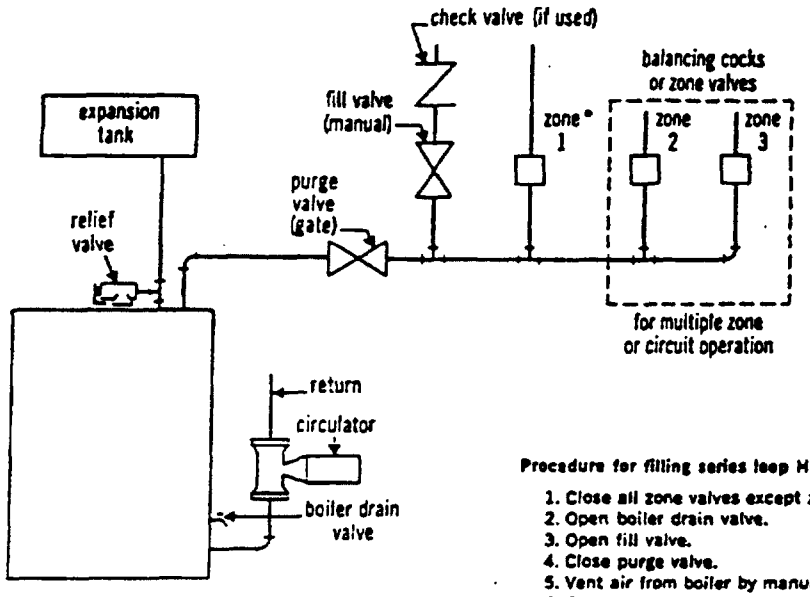

*on a single circuit job balancing cocks and zone valves not needed

Note 1: Where multiple circuits are used without zone valves, square head cocks should be installed for balancing. These square head cocks can be shut off to purge each circuit in turn.

Note 2: For a single loop Heatrim System, no additional vents, cocks, valves, drains, or other accessories are required—with one exception. If tankless heater is used and Heatrim is above the boiler outlet, a flow check valve must be installed to prevent gravity circulation.

Procedure for filling series loop Heatrim System:

1. Close all zone valves except zone to be purged.
2. Open boiler drain valve.
3. Open fill valve.
4. Close purge valve.
5. Vent air from boiler by manually opening relief valve.
6. Open second valve to be purged. Close first zone. After second zone is purged open third zone valve and close second zone. Repeat for as many zones as in system. (Note: Always have one zone valve open.)
7. When all zones have been purged, close boiler drain cock.
8. When water appears at relief valve, release lever and allow to close.
9. Continue filling until pressure gauge reads approximately 12 lbs./sq. in. Close fill valve.
10. Open purge valve.

orifice drill sizes—main burner spuds (at sea level)

input per burner Btuh	specific gravity of gas	natural and mixed gases					LP	
		800 Btu. cu. ft.	900 Btu. cu. ft.	1000 Btu. cu. ft.	1050 Btu. cu. ft.	1100 Btu. cu. ft.	2500 Btu. cu. ft.	3300 Btu. cu. ft.
30,000	0.60	31	34	37	39	39	—	—
30,000	0.65	31	33	37	39	39	—	—
30,000	0.70	31	32	35	37	37	—	—
30,000	1.53	—	—	—	—	—	52	—
30,000	2.00	—	—	—	—	—	—	53

Note: Table shows orifice sizes by numbered drill sizes. Sea level ratings are to be used for elevations between 0 and 2000 ft. For altitudes above 2000 ft., sea level ratings should be reduced 4% for each 1000 ft. above sea level.

manifold pressure table

gas	heating value •	manifold pressure in. H_2O
nat. & mxd.	800-1200	3.5
LP	2500 & 3300	11.0

• Heating value of gas at sea level (60°F and 30 in. Hg.)

AMERICAN STANDARD PLUMBING & HEATING DIVISION
40 WEST 40TH STREET • NEW YORK, N.Y. 10018