15 to 20 percent in the heating capacity of the system, depending upon the refrigerant circulating rate and the quantity and temperature of the ventilation air.[4]

The cycle shown in Fig. 11, employing a capillary tube to regulate the refrigerant flow, is generally used for the smaller, self-contained package type units. The heating or cooling effect in this cycle is obtained by automatically positioning a valve to change the direction of the refrigerant flow. The capillary tube simplifies the system and is readily adaptable to hermetically sealed refrigerant circuits.

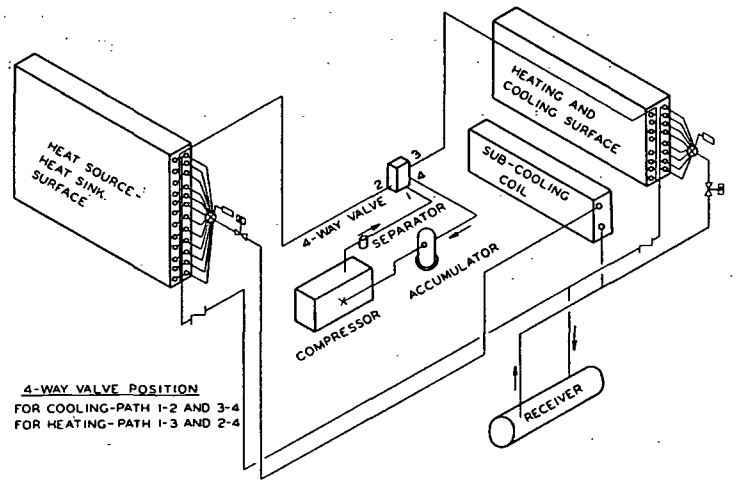

FIG. 10. HEAT PUMP DIAGRAM SHOWING EXPANSION VALVES TO REGULATE REFRIGERANT FLOW

(System to be arranged for complete gravity drainage of liquid refrigerant from heating (and cooling surface, and from heat source-heat sink surface, to liquid receiver.)

Fig. 12 illustrates a fixed-refrigerant-circuit heat-pump cycle, using well water as the heat source and sink. This cycle is particularly attractive, since the compressor, condenser, chiller and all refrigerant piping can be assembled readily at the factory and shipped as a single package. Either a reciprocating or centrifugal compressor, of reasonably large capacity, can be used. A well-water coil can be incorporated in this design to preheat the ventilation air in a manner similar to that described for the refrigant sub-cooling coil in Fig. 10. This coil can also be used to pre-cool the ventilation air or recirculated air, or both, during the cooling operation and thereby increase the cooling capacity of the system.

Fig. 13 shows one of several possible heat-pump systems for supplying simultaneous heating and cooling to a conditioned space. This arrangement is advantageous for large buildings having interior areas with heat gains sufficient to require cooling while exterior areas require heating, or for buildings having large glass areas that may require cooling on sun-exposed sides and at the same time require heating for other exposures. In such cases, the arrangement shown in Fig. 13 transfers heat from the areas needing cooling to those requiring heating. Such a cycle results

in a relatively high operating efficiency with a corresponding reduction in operating cost.

Heat Source and Heat Sink Mediums

Practically any form of available heat is readily applicable to the heat-pump cycles illustrated by Figs. 10, 11, 12 and 13. The majority of the systems, however, use outdoor air or well water as the heat source and heat sink, although there are a few ground installations in operation. The heat-source heat-sink medium will dictate the type of surface employed, but does not affect the basic flow diagram. For instance, a conventional, finned-type, forced-circulation surface may be employed for outdoor air, while a refrigerant-water heat exchanger might be used if water were the medium. The most practical heat-source and heat-sink selection for a particular application will be influenced by many factors, such as geographic location, climatic conditions, initial cost, and availability. An

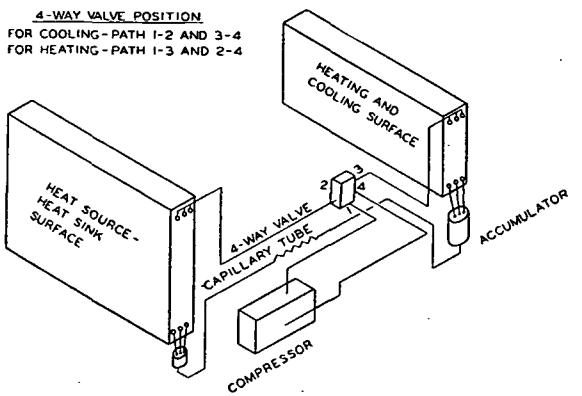

FIG. 11. HEAT PUMP DIAGRAM SHOWING CAPILLARY TUBE FOR REGULATING REFRIGERANT FLOW

ideal medium should be inexpensive and abundant, and be available at a temperature of 50 to 80 F the year-round.

Well Water is potentially a satisfactory and in many cases an ideal heat source, provided:

1. It is chemically suited and does not require extensive chemical treatment or make use of expensive corrosion-resistant metals necessary. Unfortunately, it is becoming increasingly difficult to obtain a dependable supply of trouble-free well water in many parts of the country.
2. Its disposal, after use, does not constitute a difficult problem. Some considerations are: whether return to wells will be necessary, whether storm sewers be used, or whether a prohibitive users' tax is involved?
3. The uncertainty of finding a sufficient quantity at a given location, and the cost of drilling and maintenance do not make its use uneconomical.

Outdoor Air offers a universal heat-source heat-sink medium for the heat pump. Its popularity is rapidly increasing in many areas of the country. However, two factors must be taken into consideration when selecting or designing this type of system: (1) many localities experience wide fluctuations in air temperature and (2) the temperature is lowest when the heating requirements are the greatest.