PLAINTIFF'S EXHIBIT

CAP-1453

# ASBESTOS BULLETIN

Vol. 18 No.6

November–December 1977

Editor: Dr. C. Z. Carroll-Porczynski

CONTENTS

| | Page |
|---|---|
| Part 1. ASBESTOS MINING | 101 |
| Part 2. ASBESTOS CEMENT | 106 |
| Part 3. ASBESTOS TEXTILES | 111 |
| Part 4. ASBESTOS FRICTION MATERIALS | 111 |
| Part 5. ASBESTOS REINFORCED PLASTICS | 112 |
| Part 6. BUILDING MATERIALS | 112 |
| Part 7. ASBESTOS PACKING, SEALING AND COATING COMPOSITIONS | 113 |
| Part 8. ASBESTOS PAPER AND INSULATING MATERIALS | 114 |
| Part 9. REFRACTORY FIBRES | 115 |
| Part 10. COMPANY NEWS | 115 |
| Part 11. ASBESTOS HEALTH HAZARDS AND PRECAUTIONS | 117 |
| Part 12. REVIEW OF JOURNALS | 118 |

© Copyright Astex Publishing Co., 1977

## CANADA

573. The government's asbestos policy
The Quebec Asbestos Mining Association "Bulletin", Vol. 1, No. 6, October, 1977.

No one questions the right of the Quebec Government to adopt policies of its choice in respect of economic development and particularly in the field of natural resources, provided that in the process the fundamental rights of others are respected.

State-Industry cooperation

The Quebec Asbestos mining producers welcome the decision of the Government to set up proper means of consultation and cooperation between the State and the Industry so as to maximize the results of the efforts of all concerned and thereby foster optimum development of manufacturing and use of asbestos products in Quebec, while at the same time promoting additional industrial and technological research and helping resolve problems of health and hygiene at work.

For many years, the asbestos mining companies were alone in giving tangible interest and concern to such matters, as is demonstrated by the impressive work accomplished by the Institute of Occupational and Environmental Health, founded in 1966 by the Quebec Asbestos Mining Association, by the investment of millions of dollars to improve working conditions and the environment, by the commissioning of the first indepth study on the possibilities of manufacturing finished asbestos products in Quebec and by the research programmes carried out under the auspices of the Association.

Equal partners

The asbestos mining industry, which has been advocating a dynamic cooperation between the mining sector and the public authorities, feels that in these areas, the initiative of the Government offers new perspectives towards the orderly evolution of relations between State and industry. Such cooperation could well produce most constructive and fruitful results, provided however that it is founded on equality of partnership, on mutual trust and good faith and provided also that the State does not unduly take advantage of its position to change the ground rules between the partners.

The Quebec Government can count on the cooperation of the Quebec asbestos mining producers in the pursuit of realistic and financially viable objectives and in the search for and the activation of programmes of action towards promoting the socio-economic development of Quebec.

Questionable decision

As for the proposal of the Government to acquire a controlling interest in Asbestos Corporation Limited, it does not appear founded on an objective evaluation of the best means to insure the development of the asbestos industry for the greater benefit of all Quebecers.

The asbestos mining producers of Quebec query the advisability of such a decision, costly for the Quebec taxpayers, generating uncertainty and demoralizing private enterprise. In addition, this move is not conducive to the creation of new jobs nor to the improvement of productivity and is not likely to contribute to the betterment of Quebec's economy.

The asbestos mining companies will not remain indifferent to the fate imposed on one of them by the Government and, along with financial and business circles, will be following very closely the way in which the Government proceeds to implement its plan and ensure conditions both humanly and financially fair and equitable.

574. Asbestos Corporation
Financial Times, Thursday, December 1, 1977.

The Quebec Government has tabled legislation setting up a National Asbestos Corporation, capitalized at $250m. The provincial Resources Minister, Mr. Yves Berube, said that the cost of buying the existing and privately-owned Asbestos Corporation would be about $200m., and about $50m. would be earmarked for investing in fibre-processing plants in the future.

The aim is to get the legislation through the National Assembly before Christmas.

The Government, through U.S. investment bankers Kidder Peabody, is about to begin negotiations with General Dynamics of the U.S. to buy the controlling 54·6 per cent. interest in Asbestos Corporation, second largest fibre producer in Quebec, which exports raw fibre to 70 countries.

Mr. Berube said that Quebec will pay "a fair value" for the controlling shares, which "would be neither market nor book value."

575. Asbestos Corp. Quebec takeover target.
The Northern Miner, October 27, 1977.

The Quebec finance minister said a public offer for Asbestos Corp. shares would be at "an equivalent price" to that paid for the General Dynamics block, but with allowances for tax differences for the U.S. parent. He said: "Adjustment – to the price – would be clearly perceived as being tax adjustments".

Mr. Parizeau went on to say that funds for the province's proposed acquisition of Asbestos Corp. will be provided by what he termed a "hideous error" in the calculation of Federal transfers to Quebec. He said some $200 million in excess provincial revenue will be generated by a slip-up in Federal forecasting which earlier this year over-valued taxation rights ceded by Ottawa to the provinces. (Federal officials have confirmed that an adjustment made last month lowering the estimated



ASARCO ALV 0005292

value of taxation points will, under an automatic formula, increase certain cash payments made to the provinces. The official said Quebec, which is the only one of the 10 provinces to collect its own taxes, will receive a "windfall payment" of $172 million this fiscal year).

Mr. Parizeau this week also revealed that Quebec, through its provincial pension plan, already holds between 5% and 5·5% of Asbestos Corp's outstanding shares. He said these are the only shares held by the province or its entities.

At the same time, Mr. Parizeau refuted suggestions that the proposed takeover would damage Quebec's reputation with potential outside investors. Referring to a speech last January by Premier Levesque in New York, in which an interest in the provincial asbestos industry was declared, he said "Nobody, absolutely nobody, can say we've taken them by surprise. That's why it was so important to set the rules of the game right from the start".

In his contribution to the situation, Yves Berube, Minister of Natural Resources, says the intent of the 'takeover' is to allow the province to develop a major secondary asbestos transformation industry in cooperation with the other giants of the Quebec asbestos industry.

"All we want is to get into the exclusive club. Once we're in we intend to be very nice guys", Mr. Berube said. In a rather veiled threat, he added that the Quebec government expects full cooperation from the other producers because, if their cooperation is not forthcoming, the government will have to consider "further action".

576. Expansion programme at Bell Asbestos Mines
The Quebec Asbestos Mining Association "Bulletin", Vol. 1, No. 6, October, 1977.

Bell Asbestos Mines Ltd., a member of the Turner & Newall Group, is investing a further $3·7 million in its facilities at Thetford Mines in order to increase its production of fibre by 28%. This follows the successful completion of a $10 million mill modernization programme and the installation of $1·7 million unit which has improved tailings disposal facilities. The company expects increased profitability as a result of lower operating unit costs when the project is completed.

577. Stock markets
The Northern Miner November 17, 1977.

Asbestos Corp continued its advance of recent weeks, reaching another new high of $38.

578. Advocate increases dividend

Advocate Mines Ltd has declared a 1977 dividend of 18·5¢ per common share payable on November 30, 1977, to shareholders of record on November 17, 1977. In 1976, the company paid 8·1¢ per common share.

579. Canada asbestos shipments
September 1977

Producer shipments of asbestos declined to 157,802 short tons in September, 1977, from 158,860 short tons in September, 1976.

580. Toronto stock exchange. $50 bid for asbestos corporation
The Northern Miner, November 3, 1977

Asbestos Corp. was in the limelight this week, a rather unusual role for this rather staid old company. The stock was strong and very active as the financial community speculated at what price the Quebec government would bid General Dynamics for its 54·6% controlling interest in the big asbestos producer. It is understood that the government has now named a large U.S. investment house to negotiate a "fair" price – generally expected to be something in the order of $50 a share. The stock closed Tuesday at $35 a share, ahead over $2 on the week on volume of 85,602 shares. This, of course, is well up from its 1977 low of $19·75.

581. Johns-Manville "Can Live" with asbestos policy
The Northern Miner, November 3, 1977.

Johns-Manville Corp., the American parent company of Canadian Johns-Manville, in a prepared statement says it can live with the Quebec government's asbestos policy. The government plans "do not seem to pose any problems", the statement says.

"We are ready to negotiate with the Quebec government in all areas in the policy statement and will continue to support the government's efforts to improve the economic well-being of Quebec".

Canadian Johns-Manville the wholly-owned subsidiary, is currently engaged in a $77-million expansion and modernization program. The program was first announced about a year ago, but was suspended last winter after Parti Quebecois Premier Rene Levesque publicly threatened nationalization of the industry within the province. Following meetings with government officials, Johns-Manville a couple of months later announced the program would continue as planned.

582. Canada — Export of asbestos

| Commodity and Country | | August 1977 Quantity Ton | August 1977 Value $,000 | Cumulative Totals 1977 Quantity Tonne | Cumulative Totals 1977 Value $,000 |
|---|---|---|---|---|---|
| Asbestos crude | Total | | | | |
| Asbestos Milled Fibres, Group 3 GR | | | | | |
| United Kingdom | 1 | 585 | 569 | 4,792 | 4,555 |
| Austria | 43 | | | 63 | 59 |



ASARCO ALV 0005293

| Commodity and County | | August 1977 Quantity Ton | August 1977 Value $,000 | Cumulative Totals 1977 Quantity Tonne | Cumulative Totals 1977 Value $,000 |
|---|---|---|---|---|---|
| **Asbestos Milled Fibres, Group 3GR (*contd*)** | | | | | |
| France | 54 | 113 | 123 | 213 | 233 |
| Germany West | 55 | 44 | 47 | 1,139 | 1,270 |
| Italy | 67 | 49 | 61 | 545 | 579 |
| Portugal | 78 | 25 | 33 | 230 | 176 |
| Spain | 82 | | | 349 | 334 |
| Czechoslovakia | 246 | 196 | 264 | 631 | 742 |
| Germany East | 258 | | | 26 | 43 |
| Hungary | 262 | | | 60 | 70 |
| Poland | 277 | | | 1,044 | 1,411 |
| Turkey | 382 | | | 198 | 216 |
| India | 519 | 10 | 11 | 583 | 530 |
| People R China | 553 | 30 | 50 | 82 | 126 |
| Japan | 559 | 173 | 195 | 1,356 | 1,560 |
| Philippines | 567 | | | 12 | 13 |
| Taiwan | 578 | | | 31 | 34 |
| Australia | 614 | | | 5 | 5 |
| Argentina | 744 | | | 90 | 119 |
| Brazil | 752 | 73 | 95 | 412 | 566 |
| Colombia | 758 | 5 | 5 | 5 | 5 |
| Venezuela | 785 | | | 183 | 188 |
| Mexico | 874 | | | 313 | 324 |
| United States | 990 | 628 | 749 | 5,679 | 6,392 |
| | Total | 1,931 | 2,202 | 18,041 | 19,552 |
| **Asbestos Milled Fibres, Group 4 & 5** | | | | | |
| United Kingdom | 1 | 1,942 | 1,050 | 27,518 | 14,133 |
| Ireland | 17 | | | 458 | 253 |
| Austria | 43 | 1,378 | 796 | 5,854 | 3,176 |
| Belgium-Luxemb | 44 | 2,841 | 1,516 | 12,390 | 6,633 |
| Denmark | 49 | 1,020 | 428 | 6,320 | 2,762 |
| Finland | 53 | 161 | 104 | 381 | 224 |
| France | 54 | 2,024 | 1,085 | 18,858 | 9,707 |
| Germany West | 55 | 2,354 | 1,103 | 44,528 | 21,836 |
| Greece | 59 | | | 3,747 | 1,732 |
| Italy | 67 | 1,427 | 861 | 17,110 | 9,266 |
| Netherlands | 73 | 1,031 | 642 | 11,666 | 6,621 |
| Norway | 76 | 100 | 62 | 702 | 299 |
| Portugal | 78 | | | 3,792 | 1,869 |
| Spain | 82 | 3,315 | 1,813 | 27,628 | 14,736 |
| Sweden | 85 | | | 418 | 221 |
| Switzerland | 86 | 925 | 624 | 4,918 | 2,687 |
| Czechoslovakia | 246 | | | 2,400 | 1,349 |
| Germany East | 258 | 340 | 230 | 4,500 | 2,838 |
| Poland | 277 | | | 2,060 | 1,187 |
| Romania | 279 | | | 6,230 | 3,507 |
| Yugoslavia | 288 | 60 | 34 | 5,249 | 2,868 |
| Emirates, U.A. | 328 | | | 1,142 | 710 |
| Iran | 347 | 250 | 101 | 2,901 | 1,347 |
| Iraq | 352 | | | 1,000 | 615 |
| Israel | 355 | 181 | 112 | 3,269 | 1,936 |
| Lebanon | 363 | | | 700 | 450 |
| Libya | 366 | | | 200 | 124 |
| Saudi Arabia | 369 | | | 151 | 83 |
| Syria | 379 | | | 1,500 | 977 |
| Turkey | 382 | | | 932 | 383 |
| Egyptian A.R. | 385 | | | 2,306 | 1,356 |
| Nigeria | 418 | 1,002 | 407 | 4,712 | 2,414 |
| Zambia | 428 | | | 200 | 98 |
| Algeria | 443 | 200 | 112 | 5,500 | 2,937 |
| Angola | 446 | | | 156 | 97 |
| Zaire | 449 | 201 | 99 | 201 | 99 |
| Morocco | 473 | | | 521 | 302 |



ASARCO ALV 0005294

| Commodity and County | | August 1977 Quantity Ton | August 1977 Value $,000 | Cumulative Totals 1977 Quantity Tonne | Cumulative Totals 1977 Value $,000 |
|---|---|---|---|---|---|
| **Asbestos Milled Fibres, Group 4 & 5 (*contd*)** | | | | | |
| Senegal | 482 | | | 239 | 141 |
| Spanish Africa | 484 | | | 50 | 31 |
| Bangladesh | 512 | 80 | 32 | 80 | 32 |
| Sri Lanka | 513 | | | 728 | 375 |
| Hong Kong | 516 | | | 110 | 47 |
| India | 519 | 662 | 341 | 14,608 | 7,652 |
| Malaysia | 524 | 1,324 | 704 | 9,380 | 4,474 |
| Pakistan | 527 | | | 3,140 | 1,664 |
| Singapore | 528 | 320 | 180 | 1,520 | 850 |
| Indonesia | 556 | 716 | 334 | 3,737 | 1,735 |
| Japan | 559 | 2,989 | 1,208 | 26,872 | 11,672 |
| Korea, South | 564 | 100 | 39 | 3,351 | 1,153 |
| Philippines | 567 | | | 956 | 460 |
| Taiwan | 578 | 300 | 140 | 1,983 | 798 |
| Thailand | 583 | 538 | 218 | 5,990 | 2,279 |
| Australia | 614 | 3,677 | 2,155 | 37,409 | 18,769 |
| New Zealand | 622 | 72 | 40 | 4,105 | 1,850 |
| Argentina | 744 | 774 | 426 | 3,890 | 1,910 |
| Brazil | 752 | 690 | 295 | 11,173 | 5,761 |
| Chile | 755 | 55 | 27 | 1,692 | 827 |
| Colombia | 758 | 4,648 | 2,794 | 12,214 | 6,838 |
| Ecuador | 763 | 200 | 102 | 2,348 | 1,216 |
| Peru | 774 | | | 1,948 | 793 |
| Uruguay | 782 | | | 265 | 146 |
| Venezuela | 785 | 980 | 531 | 5,620 | 2,877 |
| Jamaica | 824 | | | 28 | 18 |
| Costa Rica | 845 | | | 961 | 379 |
| Dominican Rep. | 855 | | | 612 | 263 |
| El Salvador | 857 | 265 | 121 | 2,386 | 1,153 |
| Guatemala | 864 | 201 | 84 | 792 | 309 |
| Honduras | 869 | | | 1,001 | 650 |
| Mexico | 874 | 1,486 | 808 | 18,796 | 9,804 |
| Nicaragua | 879 | | | 480 | 237 |
| Panama | 883 | | | 1,108 | 515 |
| Puerto Rico | 886 | | | 16 | 6 |
| United States | 990 | 9,903 | 5,154 | 91,208 | 45,036 |
| | **Total** | **50,732** | **26,914** | **502,914** | **254,551** |
| **Asbestos Shorts, Group 6–9 Grades** | | | | | |
| United Kingdom | 1 | 3,789 | 615 | 32,623 | 4,973 |
| Ireland | 17 | | | 160 | 44 |
| Austria | 43 | 901 | 231 | 1,776 | 384 |
| Belgium-Luxemb | 44 | 689 | 157 | 8,181 | 1,711 |
| Denmark | 49 | 120 | 36 | 1,754 | 410 |
| Finland | 53 | 126 | 11 | 400 | 68 |
| France | 54 | 628 | 111 | 12,040 | 1,724 |
| Germany West | 55 | 4,235 | 851 | 28,979 | 5,273 |
| Greece | 59 | | | 291 | 62 |
| Italy | 67 | 140 | 28 | 2,129 | 266 |
| Netherlands | 73 | 2,101 | 299 | 21,256 | 3,070 |
| Norway | 76 | | | 18 | 3 |
| Portugal | 78 | 180 | 46 | 1,242 | 283 |
| Spain | 82 | 614 | 170 | 6,011 | 1,383 |
| Sweden | 85 | 20 | 6 | 397 | 49 |
| Switzerland | 86 | 594 | 152 | 2,012 | 509 |
| Czechoslovakia | 246 | | | 327 | 87 |
| Germany East | 258 | 500 | 148 | 1,300 | 357 |
| Poland | 277 | | | 65 | 16 |
| Romania | 279 | | | 1,650 | 457 |
| Yugoslavia | 288 | 40 | 8 | 480 | 112 |
| Iran | 347 | | | 630 | 144 |
| Israel | 355 | | | 859 | 204 |



ASARCO ALV 0005295

## U.S.A.

586. Asbestos – 1977
Mining Journal Vol. 289, No. 7423, November 25, 1977, p. 441.

The latest in the highly informative range of mineral commodity profiles from the U.S. Department of the Interior's Bureau of Mines is Asbestos – 1977. By Mr. Robert A. Clifton, the booklet is available free of charge from the Publications Distribution Branch, Bureau of Mines, 4800 Forbes Avenue, Pittsburg, Pennsylvania 15213, U.S.A.

## CYPRUS

587. Asbestos production
Ministry of Commerce & Industry, Mines Department, Nicosia.

First Quarter 1977

| Short tons | Value £ |
|---|---|
| 7,091 | 841,275 |

Second Quarter 1977

| Short tons | Value £ |
|---|---|
| 11,153 | 1,347,650 |

## AUSTRALIA

588. Woodsreef reports
Mining Journal Vol. 289, No. 7412, September 9, 1977 p. 201.

Woodsreef Mines has announced a 49% increase in profits for the quarter ended July 31. Although this amounted to $918,450 as against $615,250 in the preceding quarter this should be compared with profits of $105,300 for the corresponding quarter in 1976. Production was slightly up in the quarter ended July at 20,183 tonnes asbestos fibre (14,450 tonnes in the preceding quarter). Last month the NSW operation was reported to have run into problems as regards asbestos dust levels.

The third stage of the company's drill programme on its Baryngil property is reported to have begun; drilling earlier this year returned values between 0·30% Chrysotile fibre content over 24 ft. to 6·94% over 26 ft.

The company's asbestos sales in calendar 1977 will approximate 63,000 metric tons, or about the same as in calendar 1976. Woodsreef expects asbestos fibre sales of between 90,000 and 100,000 metric tons in calendar 1978.

Woodsreef Mines, the Australian subsidiary, renegotiated a contract with Japanese customers in 1976 that resulted in a reduction from 40,000 tons annually to about 25,000 tons annually of fibre to be purchased under long term contracts.

Since the renegotiation of that contract, Woodsreef has "recaptured" outlets in Southeast Asia, notably in South Korea, Taiwan and Singapore.

### PREDICTS PRICE INCREASE

The Woodsreef president, who has been meeting with Canadian asbestos company executives during the past week, believes that asbestos supply and demand will remain in balance through 1978. Also, he anticipates a price increase of about 5% to 6% on a range of fibres early in 1978. Such an increase, he adds, will merely partly offset higher production costs.

He emphasizes that the demand situation could change rapidly if the major world economies "take off" in the coming year. "There are no new (asbestos) mines in the pipeline and a sharp rise in demand could lead to shortages."

### EXPLORATION

Currently, Woodsreef is into the third stage of its extensive exploration on the Baryngil asbestos property, on which $500,000 has been spent to date in efforts to develop another open pit project.

# PART 2. ASBESTOS CEMENT

589. Kinetics of the hardening of asbestos-cement sheets containing cements having different mineralogical composition
T. M. Berkovich, O. A. Gracheva and A. A. Shlomenko (NPO Asbestotsment)

Asbestos-cement is a composite material containing a brittle cement matrix reinforced with dispersed asbestos fibres. The hardening of asbestos-cement due to the hydration of the cement, results in increased strength of the cement stone and also in stronger bonds between the cement and the asbestos fibres. This leads to the creation of high tensile stresses in the asbestos fibres.

The productivity of asbestos-cement plants depends to a considerable extent on the hardening time, i.e. the hydration rate. In spite of the use of Portland cement containing 55–60% of $C_3S$ and also of the application of a brief combined hydrothermal treatment, asbestos-cement sheets reach the normal bending strength (160–180 X $10^5$ Newton $m/^2$) only after 5–10 days. The use of the ordinary cements rapidly hardening and having high strength (1,2) characterized by a high specific surface area (400–500 $m^2/kg$) and a relatively high content of fine fractions (more than 15% of particles smaller than 5 microns), does not much help because of the diminished productivity of the sheet-forming machines, decreased apparent density of the product, and worsening of other physico-technical properties of asbestos-cement articles (3). Therefore,



ASARCO ALV 0005297

*TABLE 1*

| Combine | Portland Cement Sort | Mineralogical composition, % clinker (calculated) $C_3S$ | $C_2S$ | $C_3A$ | $C_4AF$ | cement (X-ray analysis) $C_3S$ | $C_3A$ | $C_4AF$ | Strength in $10^5$ bending strength 3 | 7 | 28 | Newton m/² after days compressive strength 3 | 7 | 28 |
|---|---|---|---|---|---|---|---|---|---|---|---|---|---|---|
| Pikalevo | 400 | 63 | 15 | 3 | 14 | 58 | 4 | 10 | 46 | 58 | 65 | 268 | 343 | 425 |
| Voskresensk | 400 | 60 | 12 | 6 | 13 | 57 | 4 | 13 | 46 | 56 | 62 | 271 | 315 | 410 |
| Belgorod | 500 | 62 | 18 | 4 | 12 | 60 | 4 | 10 | 48 | 61 | 70 | 312 | 412 | 518 |

Note: Specific surface area 240–270 m²/kg; $SO_3$ content 2·1–2·7%

for the production of asbestos-cement articles, special cements rapidly hardening and having high strength are necessary.

Research carried out by Yu. M. Butt, V. V. Timashev, M. M. Sycher, I. V. Kravchenko, B. V. Volkonskii, S. M. Royak and other Soviet and foreign investigators has shown that, even if the mineralogical compositions of different cements are similar, the hydration activity of the cements may considerably differ depending on such factors as the quality of the raw materials and the technological parameters of the production process. This dependence results from the formation of solid solutions of the basic clinker minerals with inclusion of or substitution by minor constituents, whereby the microstructure of the clinker is modified. The effect can be beneficial or harmful (4).

The influence of some of these factors on the hydration activity and technological properties of cements which can be used in the production of asbestos-cement was mentioned already (5–7). Exposure of these factors can be conveniently performed by tests involving a preliminary hydration of cement in an alkaline salt brine (such as the recycled water in the asbestos-cement industry) heated to 40–50°C; the water : cement ratio should be high; the intermediate product is then subjected to a hydrothermal treatment.

The investigation of the hydration and hardening kinetics in large corrugated asbestos-cement sheets SV–1750 and UV–6 was carried out at the tile factory of the Pikalevo aluminium combine, Voskresensk 'Krasnyi Stroitel' combine and Belgorod asbestos-cement combine. Portland cements having similar mineralogical composition and specific surface area (cf. Table 1), were used, and yet there were considerable differences in the hardening time and the ultimate strength.

The test sheets SV–1750 and UV–6 were produced on the mechanized lines SM–1155 and SM–1019 according to the normal procedure. The asbestos mixture (grades 5 and 6) contained up to 20% of asbestos M–6–40; Dzhetygara asbestos was used in 15–45%. The asbestos content in the total mixture was 12·7–13·8%. The content of fibres longer than 0·074 mm (according to hydroclassification) was 6·3–6·8% (including 1·4–1·8% of the longer fraction + 1·168 mm). The temperature of the technological water was 40–52°C. The freshly formed sheets were subjected to a combined hydrothermal treatment (steaming at 50–70°C for 4–6h, saturation with water at 50–60°C for 30 min.); then stored in a warm storehouse. Preliminary experiments have shown that changes in the temperature of the technological water were without significant effect on the hardening kinetics when the hydrothermal treatment was carried out under the conditions specified above.

Results of the physico-mechanical examination of the asbestos-cement sheets at different stages of the hardening process are given in Table 2. As can be seen, sheets produced with the use of the Pikalevo cement were characterized by very rapid initial hardening and high strength (the hardening speed is evaluated on the basis of the ratio of the bending strength at the given time to the bending strength after 7 days). The normal strength was attained at the Pikalevo combine after 1–3 days. After 7 days, the sheets had a strength of 180–200 × $10^5$ Newton/m². The sheets made with the use of the Voskresensk cement had a high hardening speed, but their ultimate strength was lower than that of the Pikalevo and Belgorod cements.

The sheets made with the use of the Belgorod cement had a slower, but uniform hardening speed; they reached the standard strength after 5 days. (It should be pointed

*TABLE 2*

| Combine | Sheet | After steaming | Bending strength (R) in $10^5$ Newton/m² Hardening time, days (in brackets) R:$R_7$ in %) 1 | 3 | 7 | 28 | Density in g/cm³ * | Impact Strength $10^3$ Joule/m² * | $R/\gamma^2$ * ** |
|---|---|---|---|---|---|---|---|---|---|
| Pikalevo | SV-1750 | 154(78) | 164(83) | 183(93) | 198(100) | 211(106) | 1·71 | 2·32 | 67·7 |
| Voskresensk | SV-1750 | 97(64) | 114(76) | 140(93) | 161(100) | 163(101) | 1·69 | 2·22 | 56·3 |
| Pikalevo | UV-6 | 138(76) | 153(86) | 171(96) | 182(100) | 200(110) | 1·71 | 2·17 | 62 |
| Belgorod | UV-6 | 104(54) | 120(63) | 155(81) | 191(100) | 200(105) | 1·8 | 1·84 | 59·1 |

Notes: * After 7 days. ** Strength coefficient $R/\gamma^2$ in 10 Newton m⁴/kg².



ASARCO ALV 0005298

*TABLE 3*

| Combine | Alite hydration (in %) after days: 1 | 3 | 7 | Average speed of alite hydration in % per hour, after days: 1 | 3 | 7 | Calcium hydrosilicate content in % by volume, after days: 1 | 3 | 7 |
|---|---|---|---|---|---|---|---|---|---|
| Pikalevo | 71 | 74 | 76 | 3 | 1 | 0·4 | 0·26 | 0·28 | 0·3 |
| Voskresensk | 50 | 55 | 64 | 2·1 | 0·8 | 0·4 | 0·17 | 0·22 | 0·23 |
| Belgorod | 43 | 65 | 68 | 1·8 | 0·9 | 0·4 | 0·19 | 0·29 | 0·3 |

out that the high initial hardening speed at the Pikalevo combine was observed for many years).

It is known that the strength of the Portland cement stone and materials based thereon depends in the first line on calcium hydrosilicates, whose content depends on the calcium silicates content (especially $C_3S$) of the Portland cement and on their hydration at the time of examination. The dependence of the strength on the content of calcium hydrosilicates (especially $C_2SH_2$) in asbestos-cement is linear (8).

The kinetics of the cement hardening in asbestos-cement was investigated by means of quantitative X-ray analysis, by determining the quantity of the unreacted alite. Table 3 shows that the average speed of alite hydration during the first several days was 1·4–1·6 times higher in the asbestos-cement sheets containing Pikalevo cement than in the sheets containing Belgorod and Voskresensk cements.

Calculation of the experimental results had been carried out by the method described earlier (8). It has been confirmed that the use of the Pikalevo cement resulted in increased content of calcium hydrosilicates. Thus the high initial hardening speed and a high ultimate strength of asbestos-cement sheets are caused by rapid hydration of alite and the resulting high content of calcium hydrosilicates.

The results obtained by us were in accordance with the data published at the VI International Congress of Cement Chemistry (9), in particular with respect to the notion of high initial hardening and high ultimate strength of Portland cement depending on the hydration of alite.

The high initial hardening speed of the Pikalevo cement is apparently due to the use as one of the raw materials, of nepheline mud, which is a waste product of the manufacture of aluminium oxide by the alkaline method. The nepheline mud contains (10, 11) 75–85% of dicalcium silicate and 2–2·5% of $R_2O$ (oxides of alkali metals). This circumstance determines the specific composition of the liquid phase during the hardening, as shown by special investigations carried out at VNIIproektasbesttsement with participation of BZISI, MKhTI im. D. I. Mendeleeva LKhTI im. Lensoveta and NIIZhBom.

The results of the examination of cements and clinkers having rapid hydration in asbestos-cement, and also the determination of their technological properties influencing the productivity of the sheet-forming machines, will permit the introduction of more accurate requirements concerning the quality of rapidly hardening cements having high strength. A wide use of such elements will improve the processing of asbestos-cement articles and their strength.

References


1. I. V. Kravchenko. VI Mezhdunarodnyi Kongres po Khinsii Tsementa M. VNIIESM, 1974.
2. S. M. Royak and G. S. Royak. Spetsialnye Tsementy M. Stroiizdat, 1969.
3. T. M. Berkovich and E. S. Mikhalevskaya. Trudy VNIIproektasbesttsementa, vyp. 31. M. Stroiizdat, 1975, 36–44.
4. Yu. M Butt and V. V. Timashev. Portlandtsement. M. Stroiizdat, 1974.
5. T. V. Kurnestova et al. Technical Information. VNIIESM Ser 'Cement and asbestos-cement industry' vyp. 5.M., 1972.
6. T. M. Berkovich et al. VI Merhdunavodnyi Kongres po KHIMII Tsementa. M. VNIIESM, 1974.
7. I. I. Bernei et al. Stroit Mater. 1975, No. 11, 26–28.
8. T. M. Berkovich and A. A. Shlomenko. Stroit Mater. 1976, No. 1, 31–32.
9. G. L. Kalousek VI Mezhdunarodnyi Kongres po KHIMII Tsementa. M. VNIIESM, 1974.
10. B. V. Volkonskii and N. A. Olesov. VI Mezhdunarodnyi Kongres po KHIMII Tsementa. M. VNIIESM, 1974.
11. S. D. Makashev. Tsement, 1975, No. 12, 13–14.


## 590. Utilization of Asbestos-cement waste. AC.87

Asbestos-cement products consist of about 85% by weight of Portland cement and 15% by weight of asbestos fibre as well as the necessary water to bind the cement.

In the production process a certain proportion of the finest particles of cement and asbestos are carried away in the circulating water and, as a result, form a sludge deposit which needs to be periodically removed. This sludge amounts to about 7000 $m^3$ per annum with a water content of about 80%!

This sludge has always been regarded as a valueless waste product in asbestos-cement production and consequently had to be taken away from the factory and deposited. In recent years the placing of such deposits brought about severe, previously unknown problems. For one thing, in many parts of the country suitable natural dumping grounds can hardly be found any longer. As a result, following the law of supply and demand, this has forced up disposal costs and for another, because of the high alkaline nature of the sludge, environmental control authorities will no longer allow open and unprotected dumping.

A corrugated asbestos-cement sheet was developed by the addition of sludge waste replacing 20% by weight



ASARCO ALV 0005299

of the asbestos-cement raw mix and having the following properties:

| | | |
|---|---|---|
| Bending strength after 28 days at right angle to corrugation | = | 130 kp/cm$^2$ |
| Along corrugation | = | 90 kp/m$^2$ |
| Weight | = | 1·35 g/cm$^3$ |
| Frost resistance | = | DIN Standard 274 |

Such sheet found use as protection of walls below ground level against damp as well as providing ventilation to the cement walls. See figure below.

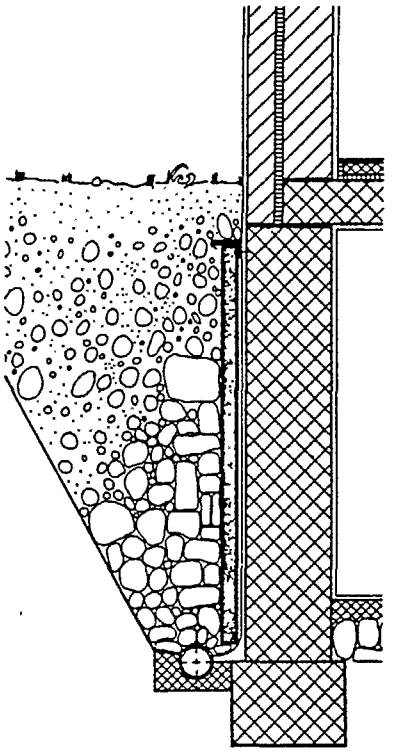

**591. Technology of the production of asbestos-cement sheets provided with a coloured water glass coating**
Yu. D. Strogonov *et al.* (Translated from Russian. Full text available)

Asbestos-cement sheets used for internal and external wall linings are provided with a decorative and protective coating using a mixture of potassium water glass, ground quartz sand, zinc oxide, titanium dioxide and an inorganic pigment. The process is described in detail. The coating reduces 2–3 times the water absorption by the sheet. The coating has good resistance against abrasion. An experimental line has been installed at the NPO Asbestotsement.

**592. Asbestos-perlito-cement; its technology and properties**
I. Z. Volchek *et al.* (Translated from Russian. Full text available)

A method has been developed for the production of asbestos-cement containing expanded perlite (VNII proektasbesttsement). The method is based on the perforated drum technology, but considerable modifications had to be made. The process is described in detail. The new material has low bulk density, low hygroscopicity, high impact and static strength, and is fire-resistant.

**593. U.S.S.R. Patent No. 564,964. Production of asbestos-cement sheets.**
Y. N. Zheldakov *et al.* (in Russian)

Aluminium sulphate, aluminium chloride and calcium sulphate are added in small amounts to the asbestos-cement mixture 1–2 min. before the end of the mixing, to increase the pressure effect and to reduce the shrinkage.

**594. Corrosion of asbestos-cement pipes**
H. Kristiansen, Vatten, 1977, 33, No. 1, 53–61 (in English)

Extraction of lime from asbestos-cement pipes by water having a very low carbon dioxide content was studied over seven years; calcium was extracted to a depth of 2 mm. This process was more intensive (quantitatively) in the case of autoclaved pipes than of water-cured pipes. The corrosion did not decrease with time.

**595. Japanese Patent No. 77 63,927. Preparing asbestos-cement sheets for decorative resin coating**
Kansai Paint Co. Ltd.

Cracking of asbestos-cement sheets during the thermal hardening of a resin coating, e.g. an acrylic resin paint, is prevented by preliminarily heating the sheet at 150–350°C, cooling to e.g. 30°C, and then heating at e.g. 160°C for 20 minutes.

**596. New material based on wastes from the asbestos-cement production**
V. I. Kalinin and V. A. Podgornyi. (Translated from Russian. Full text available)

New material suitable for interior wall linings has been developed at the Krasnoyarsk asbestos-cement combine. The production differs from the similar known processes in that the dehydrated wastes from the asbestos-cement production are mixed with an aqueous solution of an alkali silicate, and the mixture is subjected to high pressure (40–50 X 10$^6$ Newton/m$^2$). The process is described in detail. Data relating to the properties of the new material are given. The process is patented (U.S.S.R. Patent No. 483 365).



ASARCO ALV 0005300

## GLASS FIBRE-REINFORCED CEMENT

**597. U.S. Patent No. 3,972,972. Process for producing a board of cement-like material reinforced by fibrous material and apparatus for the process**
Onoda Cement Company Ltd., Japan

This invention relates to a process for continuously producing a board of cement-like material reinforced by fibrous material, which comprises (A) preparing granules of cement-like material by adding water to powdery cement-like material; (B) preparing a granular mixture of the cement-like material and fibrous material by mixing the above prepared granules of cement-like material with short lengths of fibrous material dispersed in air; and (C) forming said granular mixture into a board under compression, optionally with the addition of water.

FIG. 1

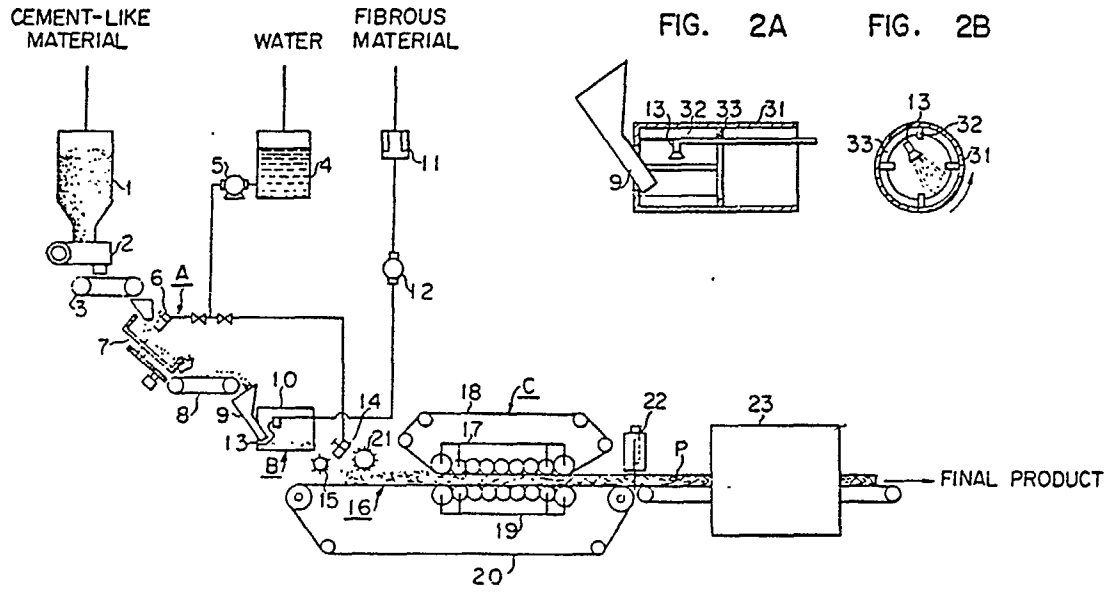


FIG. 2A



FIG. 2B



**598. U.S. Patent 3,974,024. Process for producing board of cement-like material reinforced by glass fibre**
Ondono Cement Co. Ltd.

A process for continuously producing a dense board of cement-like material reinforced by glass fibres. A process for continuously producing a light board of air-dispersed cement-like material reinforced by glass fibres.

**599. U.S. Patent No. 3,984,957. Composite building module**
Maso-Therm Co
Maso-Therm Corporation, Bridgeport, Conn.

A composite building module such as a wall panel having a core of rigid foam such as urethane foam encased in a shell made of fibre (e.g. glass fibre) reinforced cement. The shell has a bottom half and a top half. The bottom half has a peripheral ledge and a rib extending above the level of the ledge. The top half has side walls forming a channel with the rib when the top half is in place on the bottom half. The core is foamed in the enclosed shell and fills the interior thereof including the channel.

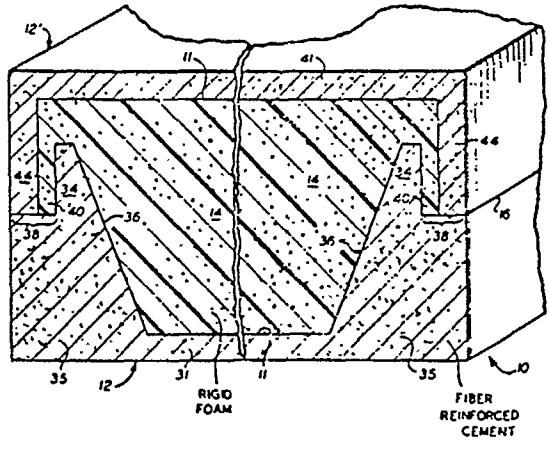




ASARCO ALV 0005301

600. **U.S. Patent No. 3,986,885. Flexural strength in fiber containing concrete**
D. R. Lankard (to Battelle Development Corp.)

In a method of making a two phase material the improvement of providing the two phase material with at least a preselected flexural strength by including and distributing the fibers in the mix in the specific quantity that the effective fiber bond area, is at least a predetermined value sufficient to provide the preselected flexural strength, and is defined as the ratio of the surface area of the fibers intersecting the fracture plane normal to the stress at the known region of highest tensile stress to the area of the fracture plane with both areas expressed in the same units is discussed.

601. **U.S. Patent 3,984,266. Process for bonding a ferro-cement structure with fibreglass reinforced plastic**
The United States of America – Secretary of the Navy

A method of making an impact resistant structural material. Portland cement mortar is poured into a mould containing layers of steel mesh and steel bars so forming a ferro-cement; this is cured. One side of mortar is etched and thin coated with an epoxy resin layer. This is partially cured and a thickness of glass fibre-reinforced plastics applied to it. Finally the resin is allowed to cure completely.

## PART 3. ASBESTOS TEXTILES

602. **Japanese Patent No. 77 68,276. Production of asbestos sheets**
E. Kasuga

Asbestos fibres are passed through a cotton-carding machine. The resulting web is immersed in an aqueous paste containing polyvinyl alcohol; and then withdrawn and dried. The resulting sheet does not emit any dust.

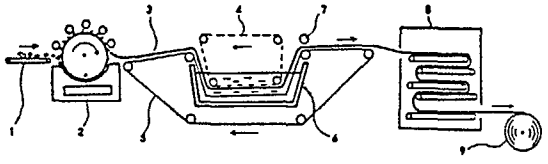

603. **Investment in health and safety continues**
TBA News, October 1977

TBA, spent on Health and Safety, almost a quarter of a million pounds in 1976 and an estimated £637,000 has been included in the current year's budget.

Some examples of the priority items which have received attention in the current year's programme and which reach into many areas of TBA activities include:

ROCHDALE

(a) A substantial amount of work has been completed on the damping of spinning and doubling frames and further work is currently under way.

(b) Work has recently been completed on the dust extraction facilities in Doubling and Weaving Department on the twisting machines. This has had a significant effect in reducing dust levels.

(c) Development work continues on the fibre filling and mechanical pomming of bins for card hopper feeding. Production trials in feeding single cards from bins in place of bags are proving successful.

(d) Development work is in progress on total individual enclosure of carding machines as opposed to group enclosure which currently exists.

604. **Canadian asbestos linked to U.S. rules**
B. Dunn. Daily News Record 7: 10 Aug. 4, 1977

OSHA regulations which will affect the already declining future of the Canadian asbestos textile industry are discussed. The export market situation and the Canadian government proposals to regulate asbestos production are evaluated.

## PART 4. FRICTION MATERIALS

605. **British Patent No. 1,472,692. Brake linings**
The Goodyear Tire & Rubber Co.

Brake linings are fabricated from a mixture of asbestos, brass chips, barium sulfate and a phenolic resin to which has been added an optimum amount of a styrene-butadiene or acrylonitrile latex which is deposited on a finely-divided phenolic resin base.

606. **British Patent No. 1,439,030. Improved plastics bearing**
Samuel Merle Shobert. 9 June 1976

A bearing consisting of ptfe fibres embedded in a resin matrix is made more efficient by increasing the ptfe content in the surface. The fibres are formed into cords with an irregular outer surface and each cord is



ASARCO ALV 0005302

woven into a fabric which further helps to anchor the fibres against displacement.

607. Solid-phase wearing in plastics processing-machines
P. Volz Kunststoffe, 1977, 67, No. 5, 279–283 (in German)

Wearing of the processing machines by various, optionally filled plastic compositions was investigated at different temperature and pressures. The highest degree of wearing was caused by asbestos-filled plastics. The morphology of the wearing was studied.

607a. Japanese Patent No. 77 16,503. Grease for brakes
Chuo Yuka Co. Ltd.

Grease, having good adhesion to metals, excellent lubricating properties and good corrosion inhibiting characteristics, is produced from an aluminium soap, chrysotile asbestos fibres (having a diameter below 0.1 micron, and a length of 1–10 microns), an ethylene-propylene copolymer and molybdenum oxysulphide dithiocarbamate; the balance is a petroleum-derived lubricating oil or a polyisoolefin.

## PART 5. ASBESTOS REINFORCED PLASTICS

608. Japanese Patent No. 77 21,044. Thermoplastic resin composition
Ube Industries Ltd.

A moulding composition is prepared by mixing an aqueous emulsion of a thermoplastic resin (e.g. acrylonitrile-styrene copolymer) with an aqueous slurry of asbestos fibres and sawdust. The moulded products have good mechanical strength and chemical resistance.

609. U.S. Patent No. 4,022,749. Formation of composite particulate material using high energy rotary impact milling.
Entoleter Inc.

Plastics are reinforced with a large amount of submicron filler particles by dispersing the mixture into a non-agglomerated state, and mixing the dispersion in an ultrahigh-speed rotary impact mill. In an example, isotactic polypropylene is blended with short asbestos fibres, and the mixture is gelled in trichloroethylene at 200°F. The gel is dried, and milled at 20,000 rpm. The product is moulded and heated at 475°F for 2–3 mins. The tensile strength and resistance to splitting are considerably improved.

610. Japanese Patent No. 77 40,562. Heat-resistant resin compositions
Fudow Chemical Co. Ltd.

Moulding compositions, having excellent thermal stability, are prepared from the resol-type phenol-formaldehyde polymer, chrysotile asbestos fibres, hydrated silica and graphite. The composition is dried, and the resulting powder is moulded at 150°C under a pressure of 300 kg/cm$^2$ The thermal curing is carried out at 170°C for 16 hours.

611. Japanese Patent No. 76 82,376. Porous asbestos-polymer compositions
Kureha Chemical Industry Co. Ltd.,

An aqueous asbestos fibre slurry is mixed with a polymer latex (e.g. a polytetrafluoroethylene emulsion); the polymer is uniformly deposited on the surface of the asbestos fibres. The product is hot-pressed at a temperature above the second transition point of the polymer, but below its melting point. The product has high strength, good thermal stability and resistance to water. It can be used in thermal or electrical insulations.

612. British Patent No. 1,457,828. Asbestos dispersions in organic liquids
T.B.A. Industrial Products Ltd.

Asbestos dispersions suitable for reinforcing plastics and elastomers, or for thickening greases, or for similar purposes, are prepared by soaking asbestos fibre bundles in dodecylbenzenesulphonic acid as a wetting and swelling agent, and then applying a mild mechanical agitation to obtain a gel-like dispersion of fiberized asbestos.

## PART 6. BUILDING MATERIALS

### A. CONTAINING ASBESTOS

613. German Patent Application No. 2344,082. Non-flammable wall or ceiling decorative materials containing asbestos
Frenzelit Asbestwerke G.m.b.H.

Decorative materials are produced from an asbestos paper, board or a fabric containing glass fibres as well. The material is provided with an aluminium backing protecting the product against heat and dampness. The material is decorated with a nonflammable pigment paste, which is applied by spraying, brushing or rolling; the binder can contain flame-retardants, such as polyphosphates or borates.

614. U.S. Patent No. 3,945,840. Moulding compositions
Sekisui Kagaku Kogyo K. K.

Composition for the production of fire-resistant



ASARCO ALV 0005303

structural articles contains 10–200 parts by weight of asbestos fibres, glass fibres or other inert fibres; 100 parts by weight of diatomite, expanded perlite or other siliceous material; and a minor amount of a binder selected from bitumen, crystalline alumina, sulphur, a metal sulphide or vanadium oxide. The product has high flexural strength, thermal resistance and dimensional stability.

615. **Japanese Patent No. 76 05,309. Asbestos-base ceramic structural materials**
Sharp Corp.

A shaped structural asbestos body (having e.g. the honeycomb structure) is dipped in an aqueous solution containing a silicate and a metal salt convertible to a ceramic material. Then the body is fired at about 1000°C, and a very strong ceramic product is obtained.

616. **German Patent Application No. 2,408,723. Self-supporting porous asbestos articles**
Frenzelit Asbestwerke G.m.b.H.

Building plates or slabs, or thermal insulations, having a density below 0·6 g/cm$^3$ are produced by mixing an aqueous asbestos slurry with cement, lime, a silicate binder and a fluxing agent; the mixture is poured into moulds, dried and hardened in an autoclave.

617. **Japanese Patent No. 75 60,519. Refractory materials expanding at high temperatures**
Hikari Kagaku Kogyo KK

Materials for refractory bricks, sealing compositions for furnaces, and similar uses, are prepared to mixing inorganic fibres (e.g. asbestos) with a material strongly expanding at high temperatures (e.g. perlite) and a binder (e.g. alumina cement). Sheets made from this composition and heated to 1000°C expand by 20–30%. The use of these materials compensates for shrinkage of other materials used in the construction of furnaces and, thus, prevents cracking.

## B. CONTAINING GLASS FIBRES

618. **U.S. Patent 3,981,950. Method for production of cement-bonded moulded articles particularly light-weight fibre boards**
Osterreichisch-Amerikanische Magnesit Aktiengesellschaft

The method consists of feeding to a heated moulding duct a composition comprising a base material (one or more of wood fibres, wood chips, lignocelluloses, mineral fibres, glass fibres, plastic chips, expanded silicates and expanded glass), granules of foamed plastics and a binder of Portland cement containing a calcium halogen aluminate. The moulding composition is heated to set the binder and so form a moulded article.

619. **German Patent Application No. 2613976. Fibre-reinforced gypsum plates**
Gebr. Knauf Westdeutsche Gipswerke

Fire-resistant plates are produced by superimposing layers of fibre webs of fabrics impregnated of gypsum acting as a binder, and compressing the assembly before or during the setting of the gypsum. Different fibres can be used including asbestos fibres. The fibres are differently oriented so that the plate is reinforced in different directions; especially, the bending strength of the plate is increased. Such plates are suitable for use as a flooring material or linings.

620. **U.S. Patent 3,979,492. Process for producing fibreboard**
Allied Chemical Corp.

Fibrous material is impregnated with short aspect ratio fibres using a curable amino resin. The impregnated fibrous material is formed into a mat which is compressed to a desired thickness between pressing platens maintained at temperature and pressure.

# PART 7. ASBESTOS PACKING, SEALING AND COATING COMPOSITIONS

621. **British Patent No. 1,409,312. Adhesive bitumen-base composition**
Berry Wiggins and Co. Ltd.

Sealing strips, firmly adhering to glass, metals, clay bricks, concrete, etc., are produced from about 59% (by weight) of bitumen (200 pen), 12% of asbestos fibres, 5% of a mineral oil, 0·75% of a metal stearate, 0·75% of dimethyloctadecyl-ammonium montmorillonite (gelling agent), and 22·5% of slate dust or another inexpensive inert filler. The composition does not flow at temperatures up to 80°C. It retains its flexibility and adhesive power at temperatures as low as −25°C.

622. **Fire-resistant coating OFP-MM**
V. S. Sorin *et al.* Stroit. Mater. 1977, 10, 25. (Translated from Russian. Full text available)

Fire-resistant coating, especially suitable for the protection of large metallic constructions (e.g. steel constructions) and for the heat-insulation, is produced from asbestos fibres, expanded perlite, a water glass (as a binder) and a phosphate (as a hardening agent). The mixture can be sprayed onto the surface to be protected. The process is described in detail. Data concerning the physico-mechanical properties of the coating are presented.



ASARCO ALV 0005304

623. **Japanese Patent No. 77 49,244. Peelable adhesive**
Nippon Zeon Co. Ltd.

An adhesive produced from a rubber, polyethylene glycol alkyl ether, asbestos fibres, an amine and calcium carbonate shows a considerable shearing strength and yet can be easily peeled off.

624. **Stabilisation of the viscosity of mastic BPM-1**
A. M. Ivanov *et al.* Lakokras. Mater. Ikh Primen, 1976, No. 2, 68–70 (in Russian)

The viscosity of mastic BPM-1 (bitumen, asbestos, linseed oil and xylene) increases during the storage due to the polymerisation of unsaturated compounds. The viscosity increase can be prevented by excluding air, adding polymerisation inhibitors and reducing the temperature during the preparation of the mastic (to 25–35°C).

625. ***Effect of composition on the properties of moulded asbestos-rubber materials***
N. P. Shanin and M. I. Dubiner. Kauchuk i Rezina, 1974, No. 10, 33–35 (in Russian)

The lateral pressure coefficient of asbestos-synthetic rubber products increases with the increasing rubber content and the increasing moulding pressure. The compressibility of the product increases with the increasing rubber content until the latter reaches 20%; then the compressibility remains virtually unchanged.

626. **U.S. Patent No. 4,013,603. Composition for coating metals**
Labofina SA

*Anticorrosive, antiabrasive and sound-insulating* coatings are formed on metal surfaces, especially on motor cars, by spraying a composition containing 5·29% (by weight) of a polymer or copolymer of vinyl chloride, 10–30% of a plasticiser, 5–15% of a bituminous distillation residue, 0·1–1·5% of a silica gel or another thixotropic agent, and 20–65% of a filter (asbestos, calcium carbonate, barite, kaolin, talc or the like).

## PART 8. ASBESTOS PAPER AND INSULATING MATERIALS

627. **U.S.S.R. Patent No. 544726. Asbestos paper**
A. V. Lebeder *et al.*

Paper, especially suitable for use as lining for supercalender rolls, is produced from asbestos fibres and a nitrile latex with addition of a cellulosic material, starch, zinc oxide and a non-ionic surfactant selected from ethoxylated alcohols and alkylphenols. The product has high thermal stability and wear resistance.

628. **British Patent No. 1,464,367. Asbestos containing insulating materials**
H. Clarke & Co.

Insulating materials having excellent electrical and anti-tracking properties are produced from a mixture of polyester resin, a cross-linking polymerisation catalyst, calcium carbonate and/or aluminium trihydrate, asbestos fibres or chopped strand glass as a reinforcement. The mixture is moulded into the desired shape, and the polyester resin is cured.

629. **British Patent No. 1,461,534. Thermal Insulations.**
B. Coulturri

A mixture of lime, silica, asbestos fibres and water is homogenised, moulded and exposed to saturated steam under a pressure of 8–15 atm for 8–15 hours. A hydrated calcium silicate is obtained. After final shaping, the products are dehydrated. By this method, insulation can be produced for pipes, panels, blocks, etc. The products have good mechanical strength and resistance to water.

630. **Japanese Patent No. 75 84,899. Heat resistant electric insulators**
Mitsubishi Electric Corp.

Electric insulators are produced by hot-pressing a mixture containing inorganic fibres (such as asbestos), boric acid with zinc oxide and/or calcium oxide, optionally with the addition of silica. The breakdown voltage is 8·9 kV/mm; the bonding strength is 9 kg/mm$^2$.

631. **U.S. Patent No. 3,968,072. Asbestos fibre-organic polymeric binder product**
Johns-Manville Corp.

Electric insulators having high tensile strength, volume resistance and stiffness, and a low dielectric constant, are produced from a composition containing 85–95% of chrysotile or anthophyllite asbestos fibres, 5–15% of a vinyl copolymer latex and optionally up to 25% of polyester fibres. The composition is formed into sheets and oxidised at 130–200°C for a time period not exceeding 1 minute.

632. **Czech Patent No. 167,147. Multilayer heat-insulating material**
S. Fiser *et al.*

An aqueous suspension of asbestos fibres is felted in a paper mill with addition of 2% of a mixture of ammonium polyacrylate and polyacrylic acid to form a 0·17 mm thick sheet. One side of this sheet is bonded to a 0·06 mm thick glass fibre fabric containing a polyester imide binder; and the other side to the asbestos sheet is backed with a 0·036 mm thick polyethylene terephthalate foil having an adhesive lining. The material is especially suitable for insulation of electric rotors at elevated temperatures.



ASARCO ALV 0005305

## PART 9. REFRACTORY FIBRES

633. U.S. Patent 3,971,669. Carbon fibre composites
*Hyfil Limited*

A method of producing a composite, shaped article from a high bulk, low density felt made from continuous carbonisable filaments in an oxidised state.

634. U.S. Patent 3,971,840. Production of high strength carbide fibres by heat treatment
Carborundum Company

A process for strengthening curled fibres made from one or more of the carbides of B. Cr, Mo, Hf, Zr, Ta and Nb in which the carbide containing fibre is heated at a temperature of 2050°–2300°C for up to 10 mins and is then subjected to a tensile stress of 1·4–2·4 $MN/m^2$ to remove internal fibre stresses, straighten the fibre and hence increase the fibre's tensile strength.

635. U.S. Patent 3,982,955. Aluminium oxide fibres and their production
Bayer Aktiengesellschaft

## PART 10. COMPANY NEWS

### CONTRACTS

636. Asbestolux chosen for market
Cape News, December 1977

In the construction of the new fruit and vegetable wholesale market in Birmingham, Cape Boards' Asbestolux solved the problem of providing fire-resistant ceilings 7,000 sq. ft which could withstand high levels of moisture without deterioration.

637. Unilux in ship construction hall
Cape News, December 1977

Some 30% of the vertical cladding enclosing the massive new ship construction hall at the Birkenhead shipyard of Cammell Laird Shipbuilders Limited will be of Unilux translucent glass-reinforced polyester sheeting made by Cape Universal Claddings.

638. Asbestos-free non-combustible board
Cape News, December 1977

The demand within the building industry for a low-cost fire-resisting material which is quick and easy to install around beams and columns has resulted in the introduction of Vermiculux, a new asbestos-free non-combustible board from Cape Boards made at Germiston. At the Christchurch factory of wallpaper manufacturer Shand-Kydd Ltd more than two miles of steel beams supporting a warehouse roof have been clad with vermiculux.

According to Mr. Hendry of Tudorfine Ltd, who was responsible for the installation, some 54,000 square feet of the material were erected in less than half the time it would have taken using other systems on the market.

639. Cape marine board
Cape News News, December 1977

Cape Boards' orders completed and in hand at Brazilian shipyards exceed the requirements for 100 ships.

640. New manufacturing line opens
Cape News, December 1977

The factory produces U.K. Marinite and the asbestos-free materials Cape Marine Board and Monolux – all non-combustible insulating boards. Its products are widely used all over the world in the shipbuilding, building, oven manufacturing and metal processing industries. Recent contracts for Germiston-made fire-resistant board materials range from the Royal Navy's latest warship HMS *Invincible* to the George Pompidou National Centre of Art and Culture in Paris.

641. Turner & Newall
Financial Times, Tuesday, November 29, 1977

Turner and Newall increased its authorised capital by £20m to £120m at an EGM yesterday by creating 20m Ordinary £1 shares.

642. Cape Industries — Half-time results reflect weaker asbestos demand
Mining Journal, Vol. 289, No. 7420, November 4th, 1977, p. 385

This major asbestos producing and fabricatings group based in London, U.K., has reported an improved group turnover of £78·78 millions for the half year ended June 30th, 1977. The comparable figure for the first half of 1976 was £65·86 million. Cape Industries' turnover for the whole of the previous financial year was £133·11 million. But as pointed out by the group's chairman, Mr. R. H. Dent, pre-tax profit for the half year was lower at £7·03 million (£7·34 million).

That group pre-tax profits for the six months showed a fall was due both to a higher group interest charge, arising from the group's heavy investment programme, and lower earnings from the mining division. The latter, represented by Cape Asbestos South Africa (Pty) Limited, showed a drop in trading profits from £4·77 million in the first half of 1976 to £3·84 million over the six months to June 30th, last.



ASARCO ALV 0005306

643. PVC plant doubles its capacity
Plastics and Rubber International September/ October 1977, p. 206

Planning permission has now been granted to British Industrial Plastics (member of T & N Group) for the construction of a 50,000 tonnes per annum PVC resins plant at the company's Aycliffe, Co. Durham factory.

The new plant is planned to come on stream during 1979, doubling the present production capacity. The estimated cost of the plant is £14·2m and it should provide up to a hundred new jobs. The plant will be built up using B. F. Goodrich (USA) technology.

644. Cassiar profits sharply higher
The Northern Miner, November 17, 1977

Earnings of Cassiar Asbestos Corp. for the first nine months of 1977 were more than double those for corresponding period of 1976.

Net profit for the period is reported at $16,500,662 or $3 a share compared with $7,267,601 or $1.32 a share, for first nine months of 1976. Revenue rose to $85,002,454 from $56,304,860.

Net profit for the third quarter was $3,794,273 or 69c a share, up from $897,314 or 16c a share, for last year's third quarter.

A slackening in demand for all asbestos fibres was noted in third quarter. N. Gritzuk, chairman, and Peter Steen, president, report. They announced an approximate 5% increase on cement grade fibres, effective Jan. 1, 1978.

Due to delays in construction, commissioning of the new air system for the mill has been postponed until the first quarter of 1978.

Exploration diamond drilling was resumed at Kutcho Creek this year and six holes were completed, five of which encountered fiberized serpentine. It is proposed to continue exploration drilling next year.

It also is proposed to continue work in 1978 on the uranium prospect in the Grand Forks area. B.C. Preliminary exploration, geochemical and geophysical work were done during the past summer.

645. T&N is going for growth
TBA News, October 1977

Turner & Newall has already announced the largest crop of new developments for many years. They cover every field of the company's manufacturing business – plastics, automotive components and construction materials.

Some take T&N into different manufacturing and marketing fields in chemicals, and give the company a new strong base in the US economy.

Growth in the USA

One is a breakthrough into the US automotive components industry to exploit the increasing share of the vehicle market which energy-saving smaller European and "compact" cars are expected to occupy.

In partnership with the American Maremont Corporation, T&N has set up a new company, Nuturn Corporation, which will manufacture brake linings, disc brake pads and clutch facings, as well as some other automotive components.

£14 m plastics project

In the U.K. T&N's largest single internal expansion project – to double capacity of vinyl plastics resins – has been given the go-ahead. Cost over the next two years will be £14 m.

Plastics are already T&N's largest U.K. interest and a faster than average growth sector.

The new plant at Aycliffe is due to come on stream early in 1979.

TAC strengthens building interests

Following its first move into building blocks last year, TAC is aiming for a much bigger share of this market. Work has started on a lightweight concrete block at Alfreton, near Nottingham, at a cost of £3·8 m.

Start-up for the six acre plant is scheduled for April, 1978.

Further automotive components expansion

Two takeovers in Britain and three new joint ventures on the Continent are further moves by T&N's automotive components division to extend its range.

The two British acquisitions are Jones Filtration and Brake Linings.

Jones Filtration produces air, oil and fuel filter elements sold under the "GUD" name, and markets a range of vehicle light bulbs, for a world market.

Brake Linings manufactures industrial and automotive friction materials, mainly for the commercial vehicle market. Its brand name, Duron, will continue.

Gasket Growth

The major producer of gaskets for the French motor industry is now one of our important associates. T&N has purchased a 49% stake in a new company based on the Curty division of Celifac SA.

Another new move is an interest in Industries Cabre which operates a modern factory in Barcelona, supplying gaskets to the Spanish automotive market, one of the fastest growing in Europe.

And through Engineering Components T&N has bought an 80% interest in a joint venture in Germany for the manufacture of "Flexitallic" industrial gaskets. EC's partner is Schmitz and Schulte based near Dusseldorf. The move will increase sales to the petrochemical and oil refining markets in Germany, Austria and Eastern Europe.

In addition to this expansion T&N has also made bids to take over two major companies. One in the UK and one in the USA.

As previously reported, an agreement has been reached on the terms of an offer for the whole of the issued share capital of Storey Brothers and Company



ASARCO ALV 0005307

toring equipment and instrumentation. Further details are available from the Registrar, McCrone Research Associates Ltd., 2 McCrone Mews, Belsize Lane, London NW3 5BG, England.

652. **Unique dust monitoring techniques**
TBA News, October 1977

TBA's involvement in airborne asbestos fibre sampling has always been a continuing major area of development. In 1951, the Company introduced its first routine monitoring programme using the thermal precipitator. Because of the limitations in this technique, which collected, in the main only particulate solids, research was directed towards the development of a system capable of measuring the number of fibres present in a given volume of air. This resulted in the introduction of the membrane filter method. Associated analytical and sampling methods had to be developed, evaluated and modified until a practically acceptable system could be applied as a routine for all situations.

The personal membrane filter sampling technique is now the foundation of TBA's routine dust monitoring system and has been adopted by many countries as standard for determining levels of airborne asbestos dust in factory environments. The same method is used by the H&SE Factory Inspectors.

By the end of the year over 5,000 personal membrane filter samples will have been taken on day and night shift personnel working in every Rochdale factory location involved in the processing and handling of asbestos-containing products.

TBA's dust monitoring strategy does not stop here. The membrane filter sampling is backed by "Royco" method which produces on average a weekly total of 4,200 results again both on day and night shifts – over 20,000 readings a year. The data collected is colour coded and recorded on plans of the factory areas and produces a complete picture requiring only cursory inspections to identify any problem positions. Collation of results and the translation of the information into pictorial patterns have enabled production and engineering staff to study possible risk zones and introduce additional ventilation and extraction systems to combat any potentially hazardous situations before they occur.

653. **Dust sampling procedures for use with the asbestos regulations, 1969**
Asbestosis Research Council, P.O. Box 40, Rochdale, Lancashire, England. Jan. 1971, 8 p. Tech. Note 2.

654. **Measurement of airborne asbestos dust by the membrane filtration method**
Asbestosis Research Council, P.O. Box 40, Rochdale, Lancashire, England, Sept. 1971. 10 p. Tech. Note 1.

This text method describes in detail the membrane filter method of sampling air and the procedure to be followed for analyzing the dust deposit obtained from the sample.

655. **Asbestos content of dust encountered in brake maintenance and repair**
A. N. Rohl *et al.* Proc. Roy. Soc. Med., 1977, 70, No. 1, pp. 32–37 (in English)

Health hazard arising from the servicing of brakes made of asbestos-containing compositions is significant.

656. **Asbestos Compensation Act**
Asbestos, September 1977

The Asbestos Health Hazards Compensation Act was introduced August 2 as Bill No. HR 8689 by Rep. Millicent Fenwick (R-NJ), with Rep. Edward Beard (D-RI) as co-sponsor. It provides for equitable compensation and exclusive benefits to persons who are disabled as a result of employment-related diseases caused by the inhalation or ingestion of asbestos and/or the inhalation of asbestos coupled with the inhalation of cigarette tobacco smoke; to members of such person's household; and to the surviving dependants of such persons whose death was due to such disease. Funding for compensation payments would be derived from the asbestos and tobacco industries and the federal government. The Bill has been referred to the House Committee on Education and Labour. (AIA/NA).

## PART 12. REVIEW OF JOURNALS

**A.C. No. 6. Canalization**
Published by Verlag Karl Kramer & Co., CH, 8001 Zurich, Spiegelgasse 14.

*Contents* *Page*


657. **Mar del Plata**
The United Nations World Water Conference 4

658. **The rehabilitation of the Bavarian lakes**
K. Bucksteeg 12

659. **Sewage disposal at the Starnberger See**
S. Glauner 15

660. **Water for an ammonia plant in Marsa el Brega, Libya** 21

661. **Rueun, Switzerland – a mountain village in the Grison builds its new sewage lines**
H. Cavigelli 29




ASARCO ALV 0005309

662. A water supply network proves its worth — the water supply of Friuli — Venezia — Guilia after the earthquake
Consorzoi Acquedotto Friuli Centrale: 3

663. Asbestos-cement in cooling towers 49

664. The Netherlands resolving the water dilemma
Th. G. Matijn 53

665. Field pressure testing of asbestos-cement pipelines
Shaul Bar-Shlomo 60

666. Asbestos-cement pile foundation system for the construction of a jetty, Cartagena, Columbia
J. A. Canon 69

667. News 76

668. Product developments 79

669. Development of interest to every asbestos processing plant

Bel-Tyne Co. Ltd. have developed a fully automatic bag slitting machine including twin automatic bag compacting units

The system is completely enclosed to eliminate operator health hazards and reduce environmental pollution. The entire operation is fully automatic for use in dust controlled environments.

The automatic Bag Slitting machine will handle all types of bags, multi-walled paper, reinforced or polywoven plastic, jute (Hessian), including bags with plastic inner liners, in sizes to 1219 mm x 330 mm x 1016 mm. Bags are fed into the bag receiving hopper by conveyor. The slitter will accept bags in any position and automatically adjusts for varying bag sizes, slits the bag along their full length, resulting in simultaneous emptying. After opening, the discarded bag halves are ejected either side of the main material chute, into the twin automatic bag compacting units, which agitates the ejected bag halves during the compacting process, ensuring any powdered materials which have adhered to porous bags is returned to the central material chute, thereby achieving maximum discharge of valuable material products.

The machine can handle all types of bags and material

## Typical plant layout

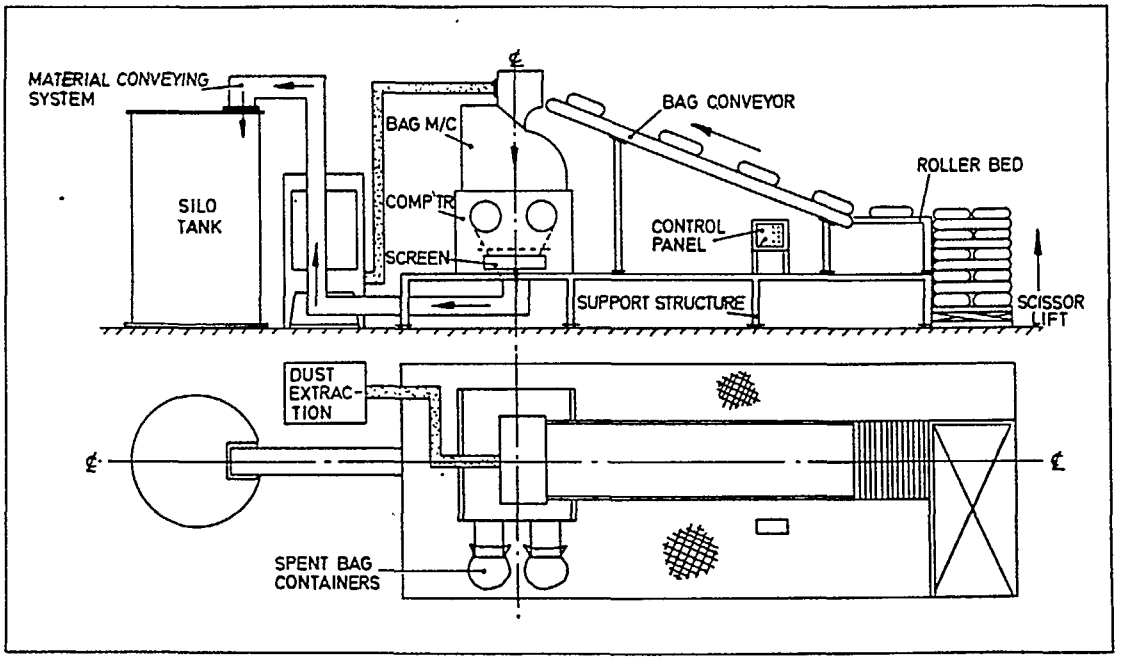




ASARCO ALV 0005310

products, including all types of Asbestos, Carbon Black, powders, etc. Throughput can be up to 10 bags per minute depending on the freeflowing characteristics of the materials.

Optional Extras

Bag feed conveyors
Material screw conveyors
Automatic screening units
Dust extraction units
Material vacuum or blowing systems
Asbestos fluffing machines
Contact part of stainless steel construction
Complete electrical control systems
Bel-Tyne can offer complete installation and planning in service for plant layout
Non-standard motors can be supplied to customer requirements.

EDITORIAL COMMENTS

Since in most asbestos processing plants the greatest generation of asbestos dust occurs at asbestos bags emptying stage, this fully automatic dust-proof equipment, already in use by leading asbestos-cement plants and mining companies, should find a wide asbestos industry acceptance. For further details write: Astex Publishing Co., 23 North Street, Guildford, Surrey, England GU1 4TA.

## RECENT LITERATURE OF INTEREST

670. Asbestos spraying, an occupational and environmental hazard
Barnes R., Med. J. Aust., 2, 599–602, 16 Oct. 1976 (in English)

Human, Asbestos Analysis Standards, Asbestosis Actiology, Case Report, Construction Materials Adverse Effects, Environmental Pollution Analysis Prevention and Control, Australia.

671. Asbestos cancers as an example of the problem of comparative risks
Gilson, J. C., IARC Sci. Publ., 13, pp. 107–16, 1976 (in English)

Human, Accidents Industrial, Animal, Asbestos Adverse Effects, Lung Neoplasms, Mesothelioma, Respiratory Tract Neoplasms Chemically Induced, Mortality, Smoking Complications.

672. An examination of the fibrous mineral content of asbestos lung tissue from the Canadian chrysotile mining industry
Pooley, F. D., Environm. Res., 12, pp. 281–98, Dec. 1976 (In English)

Human, Asbestos Analysis, Asbestosis Pathology, Environmental Exposure, Lung Analysis, Mining, Occupational Diseases Pathology, Canada.

673. Chrysotile-induced asbestosis: changes in the free cell population, pulmonary surfactant and whole lung tissue of rats
Tetley, T. D., Hext, P. M., Richards, R. J., McDermott, M., Brit. J. exp. Path., 57, pp. 505–14, Oct. 1976

Animal, Rats, Asbestosis Pathology, Cell Count, Lung Enzymology Metabolism Pathology, Lysosomes Enzymology, Macrophages Cytology, Pulmonary Fibrosis Chemically Induced, Pulmonary Surfactant Metabolism, Time Factors.

674. Radiology case No. 12, Asbestosis and right pleural mesothelioma
Bjelland, J. C., Ariz. Med., 33, 575–6, July 1976 (in English)

Human, Asbestosis Radiography, Case Report, Male, Pleural Neoplasms Radiography.

675. Cohort analysis of changes in incidence of bronchial carcinoma in a textile asbestos factory
Knox, J. F., Doll, R. S., and Hill, I. D. (1965) Annals of the New York Academy of Sciences, 132, 526–535.

676. A study of the mortality of workers in an asbestos factory
Newhouse, M. L. (1969) British Journal of Industrial Medicine, 26, pp. 294–301.

677. Secular changes in asbestosis in an asbestos factory
Smither, W. J. (1965) Annals of the New York Academy of Sciences, 132, pp. 166–181.

678. Insulation workers in Belfast. 1. Comparison of a random sample with a control population
Wallace, W. F. M., and Langlands, Jean H. M. (1971) British Journal of Industrial Medicine, 28, pp. 211–216.

679. The use of animal experiments in the study of asbestos bio-effects
Davis, J. M., Hefte Unfallheilkd., 126, pp. 564–74, Nov. 1975 (in English)

Animal, Asbestos Adverse Effects, Asbestosis Physiopathology, Carcinogenesis, Disease Models, Mesothelioma Chemically Induced.

680. Epidemiologic investigations of asbestos-exposed workers in the United States
Selikoff, I. J., Hefte Unfallheilkd., 126, pp. 512–20, Nov. 1975 (in English)

Human, Asbestosis Occurrence, Carcinogenesis, Mesothelioma, Respiratory Tract Neoplasms Chemically Induced.



5138-8-2

ASARCO ALV 0005311

A18

THE NEW YORK TIMES, FRIDAY, APRIL 18, 1980

HOUSE DANIEL DACKS

File - Asbestos

cc: LEMillan
Doug
Congdon
AK

# Around the Nation

## Federal Curbs on Asbestos Found 'Grossly Inadequate'

WASHINGTON, April 17 (AP) — Federal health and safety officials said today that the Government's restrictions on asbestos in the workplace were "grossly inadequate" to protect 1.4 million American workers from cancer and other diseases.

Safety experts from the Departments of Labor and of Health, Education and Welfare renewed calls for the Labor Department to reduce drastically its occupational standard for asbestos, from two million fibers per cubic feet of air to 100,000 fibers.

"Asbestos poses a grave danger in the workplace," said Dr. Anthony Robbins, director of H.E.W.'s National Institute for Occupational Safety and Health. "Asbestos is ubiquitous and its effects, measured in disease and death, are staggering."

Other institute officials told a news conference that an estimated 58,000 to 75,000 Americans die each year from lung cancer, asbestosis, mesothelioma and other malignancies caused by exposure to asbestos years earlier.

## Guards Twice Use Tear Gas

ASARCO ALV 0005312

# Health, hygiene and environment

## Project at the National Division of Lake Asbestos

In 1976, the Lake Asbestos Company began an additional modernization and air purification program at its National Division in Robertsonville which will have required investments totalling around $3 million by 1980.

Installation of ten air filtration systems at the mill and dryer was completed at the beginning of the year and the equipment is now in full operation. A compressor with a capacity of 2 190 cu. ft./min. has been installed to ensure the equipment operates smoothly.

The plant's hygiene will be considerably improved due to the three new central suction systems to be put into operation at the mill, dryer and crusher.

### Magnetic concentration

A new magnetic concentration system is already being used at the dryer and process plant for the ore gang waste before milling. This procedure ensures, in conjunction with four additional vertical mills, a higher production rate.

Ten push-pulls (air-cushioned separators) will soon be placed into service in the plant for the first asbestos separation phase. Two pressure packers have also been added to the equipment.

Lake Asbestos purchased *National* in 1973. The mill and mine, which employ more than 250 people, produce 90 000 tons of fibre annually. Up to now, work performed at Robertsonville has required investments of over $1 million.

### At Black Lake

On the other hand, the Company has finished installing at its Black Lake mill, which was built in 1958, three central suction units at the process plant, dryer and crusher to ensure cleanliness in the plant. About $250 000 were allocated for this work.

The use of continually modernized technical equipment is of prime importance in dust control and hygiene in the asbestos industry. Following annual examinations conducted by the Thetford Mines Industrial Clinic and verification by the Pneumology Committee of the Workmen's Compensation Board, not a single incidence of pulmonary disease was discovered among the 359 employees working for Lake Asbestos at Black Lake.

## Asbestos on *French TV network*

As part of a documentary on industrial health, the Lake Asbestos Company will be the subject of a television feature to be broadcast April 3rd, over the French CBC network's, *Les Beaux Dimanches*. Radio-Canada crews visited the Company's Black Lake site where they filmed each phase of mining operations from the open-pit mining stages (see our photo) to the processing plant and pressure packing. For this report, which was filmed in February, Lionel Piuze, Vice-president of the Company, and Benoit Poulin, Interim President of the Union, were interviewed.

Lake Asbestos (annual production: 160 000 short tons) has been in operation since 1957.





QAMA Bull., Vol 1, No. 2, April 1977

ASARCO ALV 0005313