STEAM TURBINES

PLAINTIFF'S
EXHIBIT
GE-55

BY

WILLIAM J. GOUDIE, D.Sc.

MEMBER OF THE INSTITUTION OF MECHANICAL ENGINEERS
MEMBER OF THE INSTITUTION OF ENGINEERS AND SHIPBUILDERS IN SCOTLAND
ASSOCIATE MEMBER OF THE INSTITUTION OF CIVIL ENGINEERS
JAMES WATT PROFESSOR OF "THE THEORY AND PRACTICE OF HEAT ENGINES"
IN THE UNIVERSITY OF GLASGOW

WITH 329 ILLUSTRATIONS AND NUMEROUS EXAMPLES



SECOND EDITION. REWRITTEN AND ENLARGED

LONGMANS, GREEN AND CO.
39 PATERNOSTER ROW, LONDON, E.C.4
55 FIFTH AVENUE, NEW YORK
BOMBAY, CALCUTTA, AND MADRAS
1922

All rights reserved

twin-screw ... nchor Liner *Tuscania*, by Messrs. Alex. Stephen and Son, Glasgow, is shown in Fig. 61.

The details of the reducing gear, with the oil-service pipes to the bearings, which are under forced lubrication, are very clearly shown.

In general design, these turbines are similar to those of T.S.S. *Paris*, with the exception of the astern turbine, shown at the end of the condenser on the left. This has a velocity compounded high-pressure impulse section.

The small centrifugal governor shown at the end of the L.P. turbine is an emergency one, which can come into operation in event of a shaft breakage, and operate the manœuvring valve. A similar governor is fitted on the H.P. turbine.

In this case the gear wheel is 120 inches diameter, and the speed reduction for both turbines is 12·5 to 1. On trial the maximum revolutions of the turbine shafts were 1707, and of the propeller 137 per minute. The speed was 17·65 knots and the total shaft horse-power transmitted by the four turbines, 10,900.

A similar set of turbines is fitted in the Cunard liner T.S.S. *Transylvania*, built by Messrs. Scotts' Shipbuilding and Engineering Co., Greenock.[1]

74. G.E.C. Impulse Marine Turbine. Illustrations of an impulse turbine installation with single-reduction gear, made by the Marine Department of the General Electric Co., Schenectady, U.S.A., are shown in Figs. 62 to 64. The machine is one of two propulsion units fitted in a torpedo-boat destroyer, and consists of a cruising turbine in tandem with a main turbine.

Under full-power operating conditions, the pressure of dry steam at the turbines is 250 lb./in.² gauge, and the vacuum is 28 inches.

The cruising turbine is designed to deliver power at cruising speeds up to 20 knots, the corresponding turbine speed being 1856 R.P.M.

The main turbine is designed to deliver power between 20 knots and the full speed of 35 knots, for which the corresponding turbine speed is 3497 R.P.M.

Between these limits the steam is shut off from the cruising turbine.

At the full-speed condition the total speed reduction is from 3497 at the turbine to 152 at the propeller. The reduction ratio is thus 7·74 to 1.

The cruising turbine, which is of the combined impulse type, has seven stages and is directly coupled to the main turbine at the forward end. It develops 800 S.H.P. at 1856 R.P.M., or 20 knots. The main turbine has sixteen simple impulse ahead stages and one velocity compounded astern stage and develops 13,500 S.H.P. at the full speed of 3497 R.P.M., or 35 knots.

It drives the propeller shaft through a special form of single reduction gear (Allquist) at 452 R.P.M. when running full speed ahead.

Referring to Fig. 63, which shows an outside elevation of the complete unit, the cruising turbine is shown at 1, and the main turbine

[1] For further particulars and descriptions of these two installations, see *Engineering*, January 30 and February 12, 1915.

PLATE VIII.

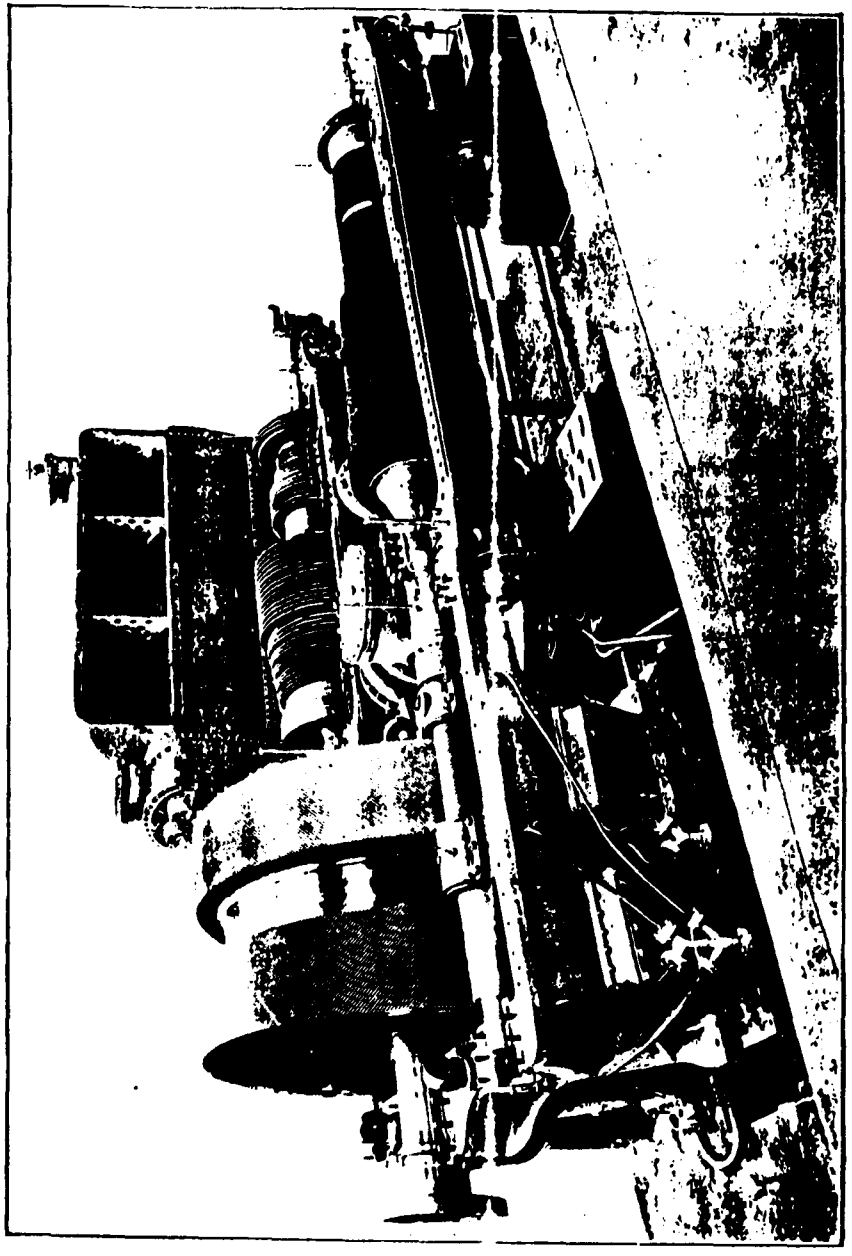

FIG. 61.—Single Reduction Geared Marine Turbines of T.S.S. *Tuscania* (port set with top of casing removed).

PLATE IX.

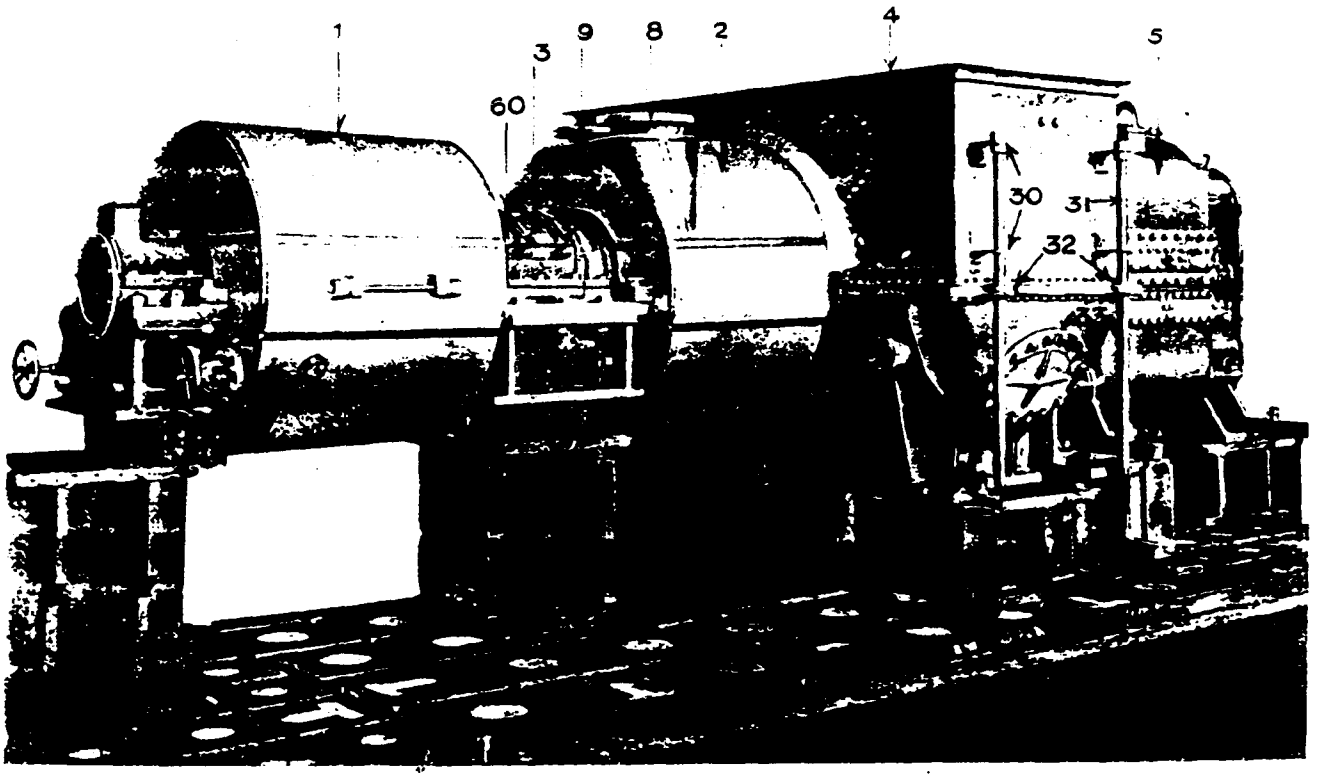

FIG. 62.—G.E.C. Single Reduction Geared Impulse Marine Turbine.

PLATE X.

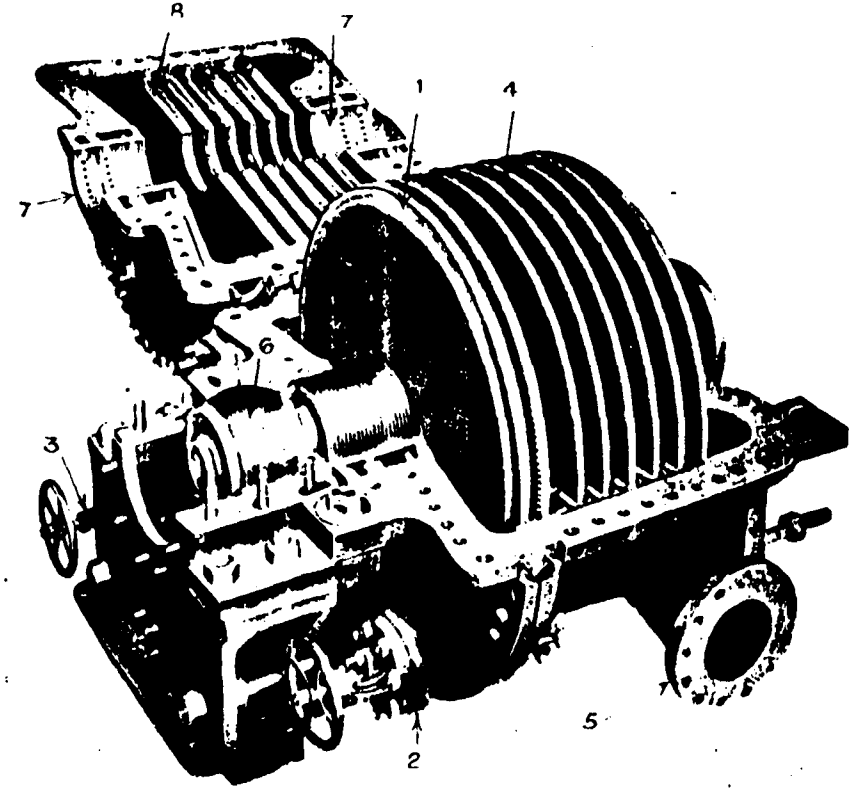

FIG. 63.—G.E.C. Cruising Impulse Marine Turbine.

at 2. The shaft of the cruising turbine is coupled to that of the main turbine by means of a flange coupling inside the casing at 3, which also contains the forward main turbine bearing and a thrust block, on the main turbine shaft. The exhaust end of the main turbine is shown at 4, and the reducing gear box at 5.

The shaft of the main turbine is flexibly connected to the pinion shaft of the reduction gear by a claw coupling, which is cased in a cylindrical guard fitted between the exhaust end and the gear box, but not visible in Fig. 62. It is shown in section in Fig. 64.

The various elements comprising the standard for the forward turbine bearing, the turbine head and shell, and the bracket of the cruising turbine, the standard for the end and thrust bearings, the exhaust end of the main turbine, and the coupling guard, are rigidly bolted together to form a continuous frame.

The housing for the speed-reduction gear and propeller thrust bearing is provided with suitable feet to act as supports, and enable it to be bolted to the seating of the vessel.

A photograph of the cruising turbine, with the upper half of the casing and bearing cap removed, is shown in Fig. 63. The nozzle arc, which discharges the steam into the blading of the first-stage two-velocity compounded wheel, 1, is fixed on the bottom half of the casing. It is divided into three sections.

The middle section, consisting of seven nozzles, is supplied with steam directly from the main, through a stop valve. The section on the port side of the machine consists of two nozzles, and that on the starboard side of five nozzles. Steam is admitted to these two groups of nozzles from the steam belt by the hand-controlled valves, 2 and 3. The opening of the hand valves depends on the cruising speed required.

When the turbine is running up to the full cruising limit, there are thus fourteen nozzles open. The steam, after passing through the blading of the velocity compounded wheel, expands successively in the nozzle passages of the six simple impulse stages, and passes through the blading of the wheels, 4. It is exhausted to the H.P. inlet of the ahead turbine through the branch, 5.

The illustration clearly shows the spherically seated bearing shell, 6, the labyrinth packings, 7, and the stage diaphragms, 8, which are similar to those of the main turbine.

A longitudinal section of the main turbine is shown in Fig. 64. Under "cruising" conditions the exhaust from the cruising turbine enters through a connection at the side of the lower half of the casing, to the steam belt, 6, from which it is admitted to the first-stage nozzles, 7.

It then passes successively through the nozzles and blading of the sixteen impulse stages, and is exhausted to the condenser at 4.

Under "full speed" conditions, the steam is delivered directly from the boilers to the main turbine, through the branches, 8 and 9 (see Fig. 62), connected respectively with the steam belt, 6, supplying steam to the first-stage nozzles, and another belt, 10, supplying it to the fourth-stage nozzles, 11. The flow is divided between the first and fourth stages according to the speed required.

At the maximum speed the major portion of the steam flow passes through the fourteen-stage nozzles; only a small portion passing through the first-stage nozzles.

Steam is prevented from bye passing to the cruising turbine by a non-return valve, fitted on the pipe connecting the two turbines.

Exhaust steam from the auxiliaries is supplied either to the fourteenth stage through a connection on the steam belt, 12, or through a connection at the main throttle valve to the steam belt, 10, supplying the nozzles of the fourth stage. The latter arrangement holds for cruising conditions.

It can also be exhausted directly to the condenser through a connection on the exhaust end of the turbine at 13, Fig. 62.

Leakage steam from the high-pressure labyrinth gland, 14, is passed, at 15, through a pipe connection to the nozzles of the tenth stage at 16, or to the nozzles of the fifteenth stage at 17 (see Fig. 62), or to the low-pressure labyrinth gland at 18, for sealing purposes, as occasion requires. This distribution is controlled by hand-operated valves on the pipe connections. Any excess of leakage steam is passed directly to the condenser through the turbine exhaust end at 19 (Fig. 62). Water of condensation is drained away to the bilges from the high-pressure steam belts, 6 and 10, by connections fitted at 20 and 21. The exhaust end is drained at 78.

The nozzle ring, 7, of the first ahead stage is held in grooves machined in the turbine head, 22, and the inner shell, 23. This ring, which is of alloy metal, is in halves, and has fourteen nozzle passages, equally spaced, formed in it. The cast-in nozzle plates are made of monel metal. Each half has tapped holes at the joint and at the circumference, for lifting purposes.

The inner shell, which divides the annular space of the turbine head into the two steam belts, 6 and 10, is of inverted tee section, the web fitting into the groove in the circumference of the turbine head. The inner circumference of this shell is turned to take the outer flange of the first-stage nozzle ring, and the first, second, and third nozzle diaphragms. The halves of this shell are grooved, and fitted with alignment keys at the joint.

In order to prevent axial displacement, projecting ribs, 24, are cast on the shell, and bear against the turbine head as shown.

The turbine head also carries the nozzle diaphragms, 25, of the stages five to eleven. These fit into grooves turned in the circumference of the casing. The steam pressure on the forward sides of the diaphragms is sufficient to ensure steam-tight joints at the forward bearing surfaces of the casing, and they are not, therefore, fixed by bolts and nuts.

From the sixth to the sixteenth diaphragm, however, "crushing pins," indicated by the unsectioned slots, 26, in the forward faces and circumferences, are provided to keep the diaphragms in correct position, and also to prevent their detachment from the upper half of the casing, when it is lifted for inspection or removal of the rotor. The horizontal pins, however, are omitted at the first five diaphragms. The last five

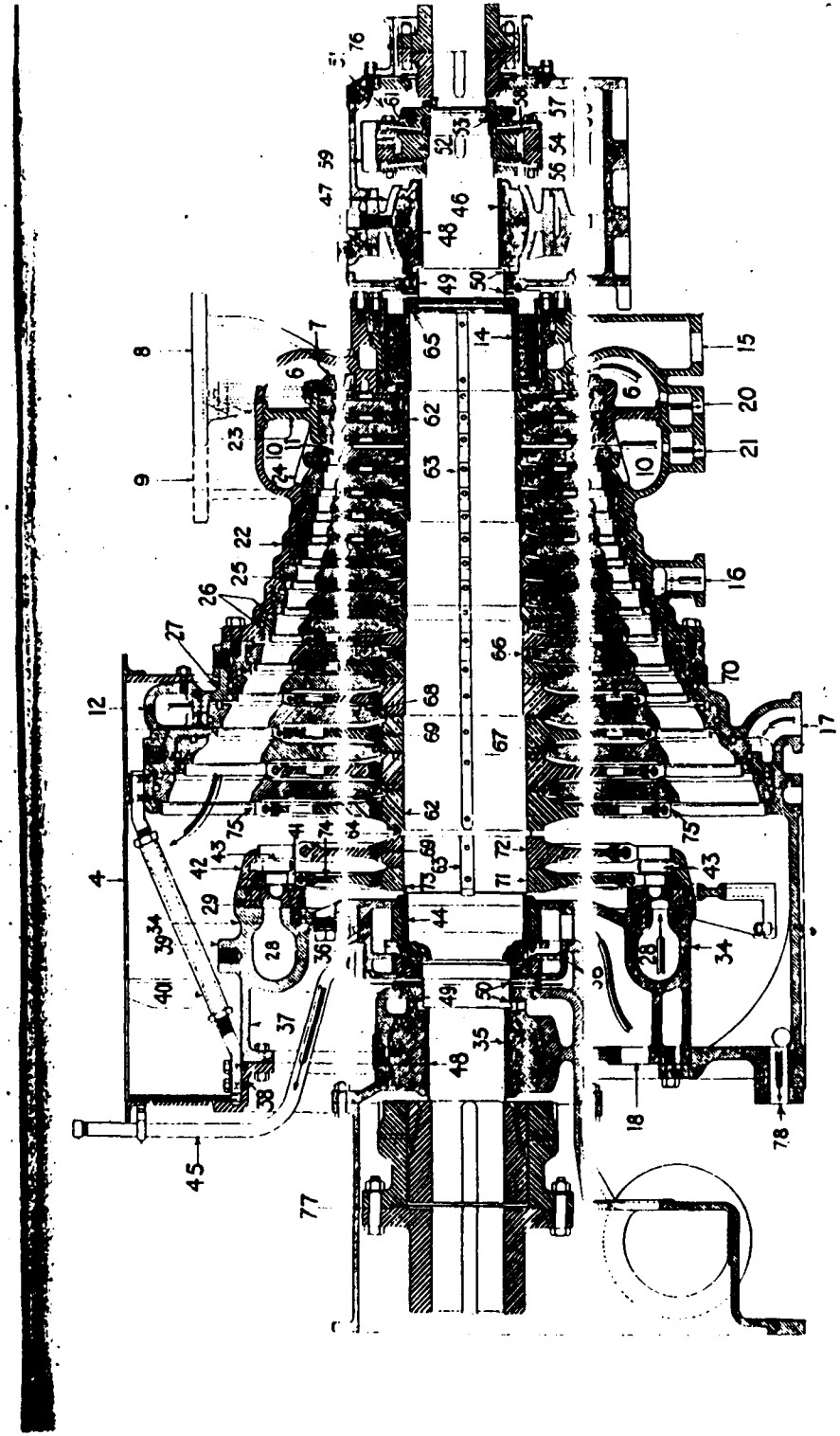

FIG. 64.—Section of G.E.C. Main Impulse Marine Turbine.

diaphragms are similarly fitted into the cylindrical portion of the exhaust end of the casing, 27.

Steam is admitted to the astern turbine through a connection at the upper half of the exhaust end, to the steam belt, 28, from which it is supplied to the astern nozzles, 29.

The exhaust steam from the ahead and astern turbines is passed to the condenser through the upper end of the exhaust casing, 4. This end or hood is rectangular in shape, as shown in Fig. 62, and is constructed of plate and angle bars. In order to support this hood against pressure from without, longitudinal and transverse struts are fitted, in addition to vertical tee-angle bars, which are placed in convenient positions inside, and welded to the main plates. The plates are spot welded to the horizontal angle bars, and the bars are welded at their junctions. All joints and seams are tested under an internal pressure of 30 lb./in.^{2} An opening is provided in the forward side of this steel hood, through which the elbow of the steam supply pipe of the astern turbine is passed. This opening is hid by the main turbine in Fig. 62. Eight brackets, 30 four of which are seen in Fig. 62, are welded to the hood. Guide rods, 31, are bolted to the upper brackets and are held in correct position by the lower brackets. These rods pass through holes drilled in projecting lugs, 32, cast on the flange of the lower half of the exhaust end, and enable the upper half to be raised and lowered without risk of injury to the internal parts of the turbine. The lower half of the exhaust casing, in addition to the external ribs shown in Fig. 62, is further stiffened by longitudinal and transverse stays which are bolted inside. Manhole covers, 33, are fitted at each side, for purposes of examination, adjustment, and repair.

The astern turbine head, 34 (Fig. 64), is in halves and forms the support for the after bearing, 35, and the low-pressure labyrinth gland casing, 36.

The upper half is provided with a flanged projection, 37, to take the double angle, 38, of the exhaust hood, 4. A tapped boss, 39, is provided to take a lifting eye-bolt. A tubular stay-rod, 40, with right- and left-handed adjusting screws, is fitted to rigidly support the upper halves of the turbine shell, the exhaust end, and the astern head.

The astern nozzle ring, 29, is similar in construction to the first-stage ahead ring. An outer shoulder is turned on it to fit a groove turned in the astern head. The ring is fastened to the head by recessed screws, 41. When it is fixed in position, the metal is riveted over at the edges of the holes, to prevent the screws from slacking back.

This ring has twenty-eight nozzle passages equally spaced all round the circumference.

It also has the foundation ring, 42, of the intermediate or stationary blades, 43, bolted to the face, the heads of the screws being recessed at the back. This arrangement effectively prevents the screws from slacking.

The high-pressure gland, 14, is of a type similar to that used in the Ljungström turbine, but the low-pressure gland, 44, is of the radial

fin type, in order to allow for expansion effects. The latter is steam sealed. Either a direct supply can be admitted at 18, or the leakage steam from the high-pressure gland can be used. The supply is so regulated that a small whiff of leakage steam is visible at the end of the vent pipe, 45, in order to ensure that there is no air leakage into the gland and thence to the condenser. An illustration and description of the high-pressure gland is given in Art. 241.

The main bearings are of the spherically seated, self-aligning type. The H.P. end bearing, 46, differs from the L.P. end bearing, 35, in having an additional heavy ring seating, 47. This ring is bored to fit the spherical surface of the bearing shell, and is machined to fit into the bearing standard and cap. Each bearing is lined with Babbit metal, and has forced lubrication. Oil is supplied under pressure through a vertical duct in the lower half, at one side, and passes into the bearing, at the horizontal joint between the lower and upper halves.

It is distributed to the surface of the shaft from a set of grooves, 48, cut in the upper half, and is carried away on the opposite side of the bearing by a second vertical duct in the lower half. In this way a continuous film of oil is maintained between the shaft and bearing surface.

A serrated oil deflector, 49, is fitted in the cap and lower part of each bearing, housing, and oil guards, 50, between this and the bearing on one side, and the gland on the other.

The thrust bearing, 51, is fitted at the forward end of the turbine. The thrust ring or collar, 52, is keyed and fixed to the shaft by a sleeve and nut, 53. The stationary part consists of a ring, 54, provided with suitable journal projections which enable it to be carried in adjusting blocks at the sides of the end bearing casing, 55. Two plates, 56 and 57, are bolted to this ring. They are provided with oil distributing ducts, 58, by means of which oil is conveyed to the collar next the shaft, and after passing between this and the inner surfaces of the plates, which are faced with white metal, is discharged through radial ducts in the central ring as indicated by the arrow at the top. The ring, 54, is in one piece, but the bearing plates are in halves. An arc deflector, 59, is fitted to the upper half, for the purpose of diverting the oil from the removable covers, 60, Fig. 62, on the top of the bearing cap.

The tendency of the rotor when running ahead is to move aft, or towards the exhaust end of the turbine, and when running astern to move forward.

If for any reason the thrust bearing wears abnormally, the blading fouls the diaphragm faces. In order to give warning of excessive wear or damage to the bearing rings, emergency or "squealer" rings, 61, are fitted. Each ring is turned in one piece, and held in place by flat-headed screws with counter-sunk heads. A clearance of 0·060 inch is given between the face of the stationary forward ring and the revolving ring fixed to the locking nut. This is 60 per cent. of the minimum axial clearance given between the blade rings and diaphragms.

The shaft is made of forged nickel steel, and machined over its

entire length. It is stepped for the reception of the wheels, 62. These are pressed on and fixed to the shaft by the keys, 63. They are locked axially by the collar, 64, at the after, and the nut, 65, at the forward end. The sixth, tenth, thirteenth, and sixteenth wheels butt against shoulders on the shaft.

At the first eleven diaphragms the adjacent wheels are kept apart by distance pieces or sleeves, 66. For the last four diaphragms the hubs of the heavier disc wheels butt together, and their surfaces take the gland packings. The packing at each diaphragm gland consists of a floating ring, 67, which is an easy radial fit in a groove at the inner

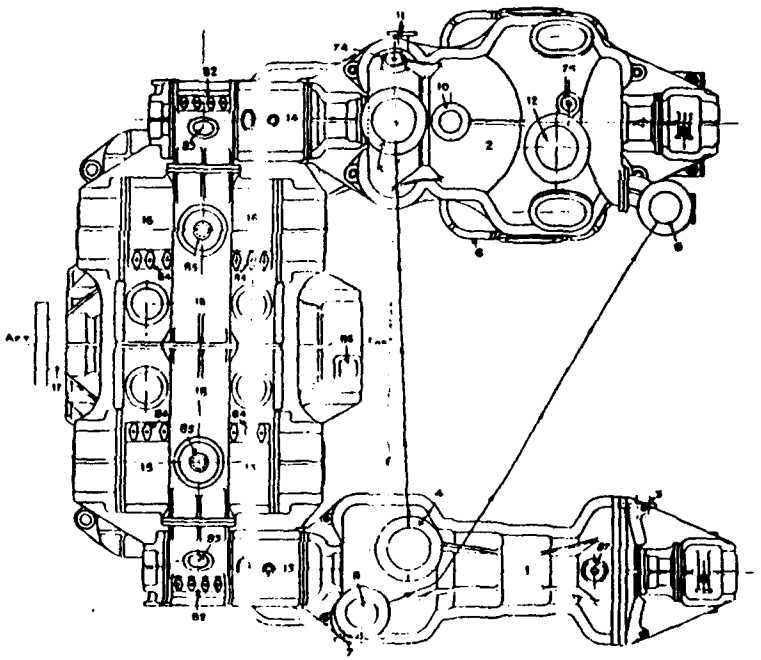

FIG. 65.—Plan of Parsons Double Reduction Geared Disc and Drum Marine Turbine.

circumference of the diaphragm, and is broadened out and provided with serrations at its inner circumference next the shaft sleeve or wheel hub. This ring is held in position by a retaining ring, 68.

Each wheel is provided with tapped holes, 69, for the reception of jacking bolts, when the wheels are removed from the shaft.

Large holes, 70, are also bored in the disc to equalize the pressure on each side.

Two wheels, 71 and 72, each carrying a single ring of blades, are used for the velocity compounded astern turbine, instead of a single wheel with two rows. These are locked axially by the collar at 64, and

a cross key at 73. Each wheel has a tapped hole for a jacking bolt, and the first wheel, 71, has also tapped holes, 74, to take balance weights.

It will be noted that all the wheel blades, 75, are of the inverted dovetail type, and thus straddle the rims. They are also fitted with shroud rings.

The intermediate or stationary blades, 43, of the astern turbine are dovetailed in the ordinary way into the segments of the foundation ring, 42. Several equally spaced holes are drilled radially through these segments to prevent excess of pressure between the astern turbine head and the wheel, 71.

The shaft is connected rigidly at the forward end to the shaft of the cruising turbine, by the flanged coupling, 76, and flexibly at the after end to the pinion shaft of the reduction gear, by the claw coupling, 77. The special type of single reduction gear used is illustrated and described in Chapter XI.

75. *Double Reduction Geared Turbines*—Parsons' Disc and Drum Marine Turbines.—The plan of a set of cross compound double reduction geared disc and drum turbines, made by The Parsons Marine Steam Turbine Co., for a cargo vessel is shown in Fig. 65. Longitudinal sections of the H.P. and L.P. ahead and astern turbines are shown in Figs. 66 and 67.

This installation is designed for a maximum S.H.P. of 2025, with steam pressure 180 lb./in.^{2} gauge, dry steam, and vacuum 28 inches.

The high-pressure turbine, 1, Fig. 65, is placed on the starboard, and the low-pressure turbine, 2, on the port side of the vessel. High- and low-pressure astern turbines of the velocity compounded impulse and combination types are fitted at the exhaust ends of the ahead turbines, and work in series.

Steam from the boilers is admitted to the H.P. ahead turbine inlet, 3, and is exhausted through the exhaust branch, 4, to the steam inlet, 5, of the L.P. ahead turbine as indicated by the directional arrow line. It is exhausted from the L.P. turbine to the condenser through the exhaust branch, 6, at the bottom.

Steam is supplied to the H.P. astern turbine inlet, 7, and exhausted through the branch, 8, to the inlet branch, 9, of the L.P. astern turbine, as indicated by the directional arrow line.

From this turbine it is discharged to the condenser through the exhaust branch, 6.

Exhaust steam from the auxiliaries can be admitted to the L.P. ahead turbine through the branch, 10. Steam can also, in an emergency, be admitted to the ahead L.P. turbine through a branch, 11, and discharged through an emergency exhaust branch, 12.

The shaft of the H.P. turbine is flexibly connected to the first motion pinion shaft of the reduction gear by a claw coupling in the gear casing at 13, and the L.P. shaft by a similar coupling to the corresponding first motion pinion shaft in the casing at 14.

The first reduction wheel and second reduction pinion, on one shaft, run in the casing at 15 and 16, while the second reduction wheel,