PLAINTIFF'S EXHIBIT
tabbies
CEL-97

INSULATION SECTION

1977 Edition

- F O R E W O R D -

SECTION PREPARATION

The Insulation Section was prepared by Ray Hearon, Clear Lake; Weldon Wallace, Bay City; Jim Beasley, Bishop; and Jack White, Pampa.

DISTRIBUTION

Each plant will be supplied three copies of the Insulation Section. Use one of these copies to reproduce your required number of copies. The Clear Lake Plant will be responsible for distribution to Chemical Company Purchasing and other Company Divisions requesting copies.

PROCEDURE FOR REVISIONS AND UPDATING

To keep this section open for improvement and the dissemination of new Engineering know-how, it is important that methods for additions or revisions to the Standard be readily available. The attached form letter should be used whenever feasible. These will be reviewed by the Insulation Standards Committee and presented to the Plant Engineering Superintendents at their meetings for final acceptance. All holders of the Insulation Standard will receive the revised material and new publications as they become available.

Interoffice Memorandum

"SAMPLE FORM LETTER"

(Name and Location)	DATE
Ray Hearon - Clear Lake	
(Name and Location)	REFERENCE NO

SUBJECT: Recommended Revisions to Insulation Section

(1) State changes or additions you feel with improve or update this section.

(2) State justification.

cc: Plant Engineering Superintendents
Bay City
Bishop
Clear Lake
Pampa

004672

CRITERIA FOR WRITING
INSULATION SECTION

1. Provide conformity of insulation between Chemical Company Plants to allow Chemical Company Purchasing to obtain the most economical agreement with the suppliers and applicators of insulation.

2. Provide a training manual for the Engineer becoming involved with insulation.

3. Establish guidelines for the application of insulation materials in the Chemical Company Plants.

M1 SCOPE

M2 INSULATING MATERIALS - HOT SERVICE

M2.1 CALCIUM SILICATE (KAYLO)

M2.1.1 DESCRIPTION

M2.1.2 SERVICE

M2.1.2.1 Temperature Range

M2.1.2.2 Components Insulated

M2.1.3 THICKNESS

M2.2 MINERAL WOOL

M2.2.1 DESCRIPTION

M2.2.2 SERVICE

M2.2.2.1 Temperature Range

M2.2.2.2 Components Insulated

M2.2.3 THICKNESS

M2.3 CELLULAR GLASS - (FOAMGLASS)

M2.3.1 DESCRIPTION

M2.3.2 SERVICE

M2.3.2.1 Temperature Range

M2.3.2.2 Components Insulated

M2.3.3 THICKNESS

M2.4 FIBERGLASS

M2.4.1 DESCRIPTION

M2.4.2 SERVICE

M2.4.2.1 Temperature Range

M2.4.2.2 Components Insulated

M2.4.3 THICKNESS

004674

M2.8 HIGH TEMPERATURE SERVICE

M3 INSULATING MATERIALS - COLD SERVICE

M3.1 CELLULAR GLASS - (FOAMGLASS)

M3.1.1 DESCRIPTION

M3.1.2 SERVICE

M3.1.2.1 Temperature Range

M3.1.2.2 Components Insulated

M3.1.3 THICKNESS

M4 WEATHER BARRIER MATERIALS

M4.1 ALUMINUM

M4.1.1 DESCRIPTION

M4.1.2 SERVICE

M4.1.2.1 Moisture Barrier

M4.1.2.2 Components Jacketed

M4.2 MASTIC

M4.2.1 DESCRIPTION

M4.2.2 SERVICE

M4.3 OTHER MATERIALS

M5 ACCESSORIES

M5.1 JOINT SEALER

M5.1.1 DESCRIPTION

M5.1.2 SERVICE

M5.2 GLASS CLOTH

M5.2.1 DESCRIPTION

M5.2.2 SERVICE

004675

M1 SCOPE

This section describes the minimum requirements for the purchase of exterior thermal insulation materials for pipe, instruments and equipment. A summary of this section is attached in Table 7.

M2 INSULATING MATERIALS - HOT SERVICE

M2.1 CALCIUM SILICATE (KAYLO)

M2.1.1 DESCRIPTION

Insulation shall be a rigid hydrous calcium silicate pipe covering of sectional or segmental form. The insulation shall contain an inhibitor to reduce the possibility of stress corrosion cracking of stainless steel. CAUTION--calcium silicate containing asbestos will not be used.

M2.1.2 SERVICE

M2.1.2.1 Temperature Range - Calcium silicate is normally used for components operating in the temperature range of 451°F to 1000°F.

M2.1.2.2 Components Insulated - Calcium silicate is used for the insulation of carbon steel and alloy piping and equipment.

M2.1.3 THICKNESS

Table 1 gives the insulation thickness for operating temperatures between 450°F and 1000°F. When economic calculations dictate a multi-layer situation, it is recommended a Kaylo/fiberglass combination be used rather than two Kaylo layers, as long as the interface temperature is below 450°F. This allows a reduction in total thickness for equivalent heat recovery and a more favorable LTROA. The two material zone is indicated in Table 1. When using the Kaylo/fiberglass combination, it should be specified that the Kaylo thickness be applied as two, 1-1/2" thick layers in accordance with A3.1.1.

M2.4 FIBERGLASS

M2.4.1 DESCRIPTION

The insulation shall be sectional pipe covering of 6# density or rigid sheets and blankets of 3# or 6# density fiberglass.

M2.4.2 SERVICE

M2.4.2.1 Temperature Range - Fiberglass is used for components operating in the temperature range of 90°F to 450°F.

M2.4.2.2 Components Insulated - Fiberglass may be used for piping, instruments, and equipment.

M2.4.3 THICKNESS

Table 4 gives the insulation thickness for components insulated with fiberglass.

M2.5 INSULATING CEMENT

M2.5.1 DESCRIPTION

Insulation shall be a high temperature mineral wool type insulating cement such as Ryder Thermokate #1-MWP or equal.

M2.5.2 SERVICE

M2.5.2.1 Temperature Range - Insulating cement is used for components operating at temperatures of 71°F and above with upper limits depending upon the material used.

M2.5.2.2 Components Insulated - Insulating cement is used for the insulating of irregular surfaces such as pumps, turbines, valves, flanges, etc. Insulating cement is also used to fill voids and smooth the surface of fabricated elbow covering.

M2.5.3 THICKNESS

The thickness of insulating cement shall be as shown for mineral wool in Table 2. For irregular surfaces use the thickness shown for 36" diameter.

M2.8 HIGH TEMPERATURE SERVICE

For services in the 1800 to 2300°F range, Babcox and Wilson "Kaowool" 8-lb density blankets or equal should be used. Insulation thickness should be determined with vendor assistance and/or use of the T-2013 program at CCCTC.

M3 INSULATING MATERIALS - COLD SERVICE

M3.1 CELLULAR GLASS - (FOAMGLASS)

M3.1.1 DESCRIPTION

Insulation shall be a rigid cellular glass material in flat block, beveled lags, or pipe covering of sectional or segmental form.

M3.1.2 SERVICE

M3.1.2.1 Temperature Range - Cellular glass is used for components operating in the ambient to -350°F range.

M3.1.2.2 Components Insulated - Cellular glass shall be used for the following:

a. Piping, instrument or equipment with a diameter of 36" or less.

b. Equipment with diameters greater than 36".

c. Irregular surfaces.

M3.1.3 THICKNESS

Table 6 gives the thickness of cellular glass insulation for piping and equipment operating from ambient to -350°F.

M4 WEATHER BARRIER MATERIALS

M4.1 ALUMINUM

M4.1.1 DESCRIPTION

Aluminum jacketing material shall be 5005 or 3003 alloy with H-14 temper. Sheets or rolls shall be 0.016" thick with 3/16" corrugations or 0.020" thick smooth. Jacketing both with and without attached moisture barrier are used. Aluminum elbow covers shall be 0.020" thick.

004678

VI-CRYL™

CP-10 (Trowel Grade)

CP-11 (Spray/Brush)

COATINGS / ADHESIVES / SEALANTS

4! 45 a gal. in 5 gal. pale

DURABLE VINYL-ACRYLIC MASTIC COATING FOR ALL THERMAL INSULATIONS

DESCRIPTION

VI-CRYL is a tough, durable, and fire-resistive mastic coating for all types of thermal insulations and masonry surfaces. It is very thixotropic - it looks heavy but spreads easily. VI-CRYL is available in a variety of standard and special fade-resistant colors.

USES

VI-CRYL is unsurpassed for the mechanical protection and weatherproofing of thermal insulations both outdoors and indoors; in hot, cold, and dual-temperature service. However, since VI-CRYL is a 'breathing' coating (vapors under pressure will pass through it) it should only be used over insulations in low-temperature, or dual-temperature service: when the insulations themselves are vapor barriers, or where a complete vapor barrier system is applied to the insulated surface either before or after the VI-CRYL is applied.

VI-CRYL in its Metallic Gray color is the ideal companion product with CHILDERS Aluminum or Stainless Steel Jacketing or STEEL JAC.® VI-CRYL gives superior mechanical and chemical protection to any irregular shape or surface where the application of CHILDERS METAL JACKETING SYSTEMS is impractical.

ADVANTAGES

In the wet state, VI-CRYL is non-flammable and non-toxic. It is freeze-thaw stabilized, and its special formulation allows for application during most times of the year - even under some subfreezing conditions. It contains no solvents that will attack insulations or facings. It is surprisingly easy to apply.

The cured film of VI-CRYL is tough, yet flexible and resists most common chemicals and many solvents. It is fire-resistive - its flame spread index being within the range of acceptance of governmental and industrial agencies.

APPLICATION

VI-CRYL is easy to apply by Trowel, Palm, Brush or Spray (use CP-11 series). Its thixotropic consistency yields a smooth, attractive finish, even over rough substrates; it readily bridges gaps and imperfections. VI-CRYL is normally applied with a fabric membrane or metal mesh reinforcement.

SEE REVERSE SIDE OF THIS SHEET FOR DETAILED APPLICATION DATA.

CERTIFIED

That this product meets the requirements of **NFPA Standard 90-A;** Is Non-Combustible in accordance with **NFPA National Fire Code 220 (b);** Meets Dry Film Fire Hazard requirements of **GSA.**

COLORS

	TROWEL	SPRAY/BRUSH
White	10	11
Metallic Gray	10-1	11-1
Black	10-2	11-2
Blue	10-3	11-3
Green	10-4	11-4
Yellow	10-5	11-5
Red	10-6	11-6
Tan	10-7	11-7

WET WEIGHT

10.2 to 10.8 lbs./gal.

AVERAGE NON-VOLATILE

64%

SERVICE TEMPERATURE RANGE

(Temperature to which dry coating is subjected)
Minus 40°F to 180°F Constant (250°F - Intermittent)

APPLICATION TEMPERATURE RANGE

10°F to 125°F

DRYING TIME

To touch - 3 hours
Through - 12 hours
(Drying time will vary depending upon film thickness, temperature and humidity. See other side for details.)

COVERAGE

15 sq. ft./gallon optimum - varies with substrate and membrane. (see reverse side of sheet for detailed application data and instructions.)

THINNER or CLEAN-UP

Clean water

WATER VAPOR PERMEABILITY — ASTM E-96

2.0 perms for 1/16 inch dry film

FIRE HAZARD CLASSIFICATION

(ASTM E-84, U.L. Tunnel Test)

Flame Spread	20
Fuel Contributed	0
Smoke Developed	0
Surface	¼ inch cement-asbestos board

Fire Hazard Classification of solvent
Non-Flammable

004679

VI-CRYL SUGGESTED SPECIFICATION: for MASTIC FINISHES

MASTIC FINISH over insulation shall be VI-CRYL, CP 10- as manufactured by Childers Products Company. It shall be applied in two coats, the first coat being a tack coat applied at a rate of 50 square feet per gallon, and while still wet a layer of Chilglas #10 open weave glass cloth membrane shall be embedded with all fabric seams overlapped a minimum of 2 inches. A finish coat at a coverage of 25 square feet per gallon shall be applied, fulling covering the cloth membrane and applied so that the minimum dry film thickness is 1/16 inch. There shall be no voids or holidays and the mastic shall be trowelled, sprayed or wet-brushed to a smooth even finish.

All adjoining uninsulated surfaces must be completely waterproofed and flashed: either by extending the VI-CRYL and fabric membrane a minimum of 4 inches onto the adjoining surface, or, if that surface will attain temperatures in excess of 180°F, use CHILJOINT CP 70 as the flashing compound.

NOTES TO SPECIFYING ENGINEER:

1. Fabric membranes of Dynel, Nylon or other suitable materials may be substituted for open weave glass cloth without affecting the application. For areas subject to severe mechanical abuse use CHILGLAS #5 Glass Cloth.

2. If Chicken Wire, Hardware Cloth, or other metal reinforcements are to be used in lieu of fabric membranes, they should be applied prior to application of mastic, and then two coats of the VI-CRYL applied in sufficient thickness to completely cover the metal mesh.

3. The above specification is for weatherproofing and protection of insulation in HOT SERVICE; or for COLD or DUAL TEMPERATURE SERVICE where the insulation and/or the insulation system forms an adequate vapor barrier prior to the application of the VI-CRYL. Where this is not the case, the following additional steps are recommended:

ALTERNATE FINISH FOR INDOOR COLD SERVICE:

After the VI-CRYL has dried completely, apply CHILDERS CHIL-PERM, CP-32 at 50 square feet per gallon, making sure the surface is completely covered.

ALTERNATE FINISH FOR OUTDOOR COLD SERVICE:

After the VI-CRYL has dried completely apply a uniform coat of CHILDERS CHIL-MASTIC, CP-20 to a minimum thickness of 1/16 inch (25 square feet per gallon) by spray or brush.

APPLICATION GUIDE AND SUGGESTED PROCEDURE

1. USE OF MATERIAL

VI-CRYL looks much heavier than it is - it is thixotropic - use it the way it comes WITHOUT THINNING!

VI-CRYL is Freeze-thaw stabilized so that it will withstand a number of cycles of freezing. However, it is best to keep it stored over long periods of time in a heated area. For spray application, VI-CRYL must be kept at minimum 50°F just prior to spraying to achieve optimum results.

2. THE CONDITION OF THE INSULATION TO BE COATED:

The best coating in the world can be no better than the surface it is going over. KNOW THE TYPE AND CONDITION OF THE SUBSTRATE!

VI-CRYL is a 'breathing coating', which means that it will allow reasonable amounts of water (in the form of vapor - a gas) to pass through it in a reasonable period of time. However, excessively wet insulation on equipment operating at elevated temperatures will cause excessive water vapor pressure, and therefore blistering of the finish. It is best to make sure that the insulation is nearly dry before application of a finish. If this is impossible, vent plugs or other relief should be incorporated to allow the release of excess water.

To obtain proper bonding, very dusty surfaces should be primed with a solution of CP #52 diluted 50% with water or one part of VI-CRYL diluted with 8 parts of water.

The presence of moisture in systems operating in Cold Service can completely destroy the effectiveness of not only the finish, but the entire insulation system. They MUST BE DRY.

3. HAND APPLICATION

Large flat areas are best covered by application with trowel or stiff brush. Smaller, irregular surfaces such as fittings are more readily covered by brushing or 'palming'. A smooth finish may be obtained by 'wet-brushing'.

4. SPRAY APPLICATION

VI-CRYL is readily applied with Mastic Pumps and Air-Atomized or Airless Spraying equipment. The airless spray technique is generally considered more satisfactory - it is faster, neater, and gives a better more uniform finish. The most common pump in use is the 30:1 using a tip with cross section radius between .033" and .055" depending upon fan size and output desired, (a .751 tip would be the most common). Hose diameters would begin at ½ inch and increase depending upon the distance the material is to be pumped. Reverse-A-Clean tip is recommended for the spray gun.

A pump in the range of 9:1 is used in the conventional method. The gun should have a ¼ inch nozzle and air cap.

To operate this equipment there should be air available at a minimum of 75 cfm and 100 psig. Water should be pumped through the system before spraying the VI-CRYL. Ram plate or follower plate should be used in spraying VI-CRYL.

Most manufacturers of mastic spray equipment maintain nearby service facilities to aid in the solution of any technical problems which arise with their equipment. CHILDERS cooperates with these companies in solving individual spray problems.

5. DRYING AND RECOATING

Second coats of VI-CRYL should be applied within one hour after the first coat, for maximum bond. Most of the volatile in VI-CRYL is water and the rate at which the film will dry varies with any of a number of factors: The thickness at which the VI-CRYL is applied; heat; humidity; wind; and the absorption by the substrate. It is dangerous to recoat VI-CRYL with a vapor-barrier finish or subject it to rain, snow or overflow of liquids unless it is dry.

CHILDERS PRODUCTS COMPANY

P. O. BOX 505 • BRISTOL, PA. 19007 • PHONE 215.943-7600 / CABLE ADDRESS: "CHILPRO" • TELEX NO. 843408

PLANTS AT: Cleveland, Ohio • Houston, Texas • Los Angeles, Calif. • Windsor, Ontario, Canada

CONDITIONS: Recommendations made by this company and its representatives are based upon test data, experiments and experience believed to be reliable. No guarantee of accuracy is made, however. All products are sold subject to the warranty appearing below, and upon the condition that the buyer will make his own tests and assume the responsibility for the suitability of the product under his application and service conditions. Statements made herein as to coverage, drying, performance, applicability, and other properties will vary according to the nature of the surfaces to which the product is applied, application technique and service conditions. Because of the conditions over which we have no control (including shipping, storage and handling), we in no event assume liability beyond the purchase price of our products involved and make as a condition of sale that we will refund the purchase price or replace materials proven to be defective and reported within 60 days of delivery. No representative of manufacturer and/or seller has authority to alter or extend these conditions.

M5 ACCESSORIES

M5.1 JOINT SEALER

M5.1.1 DESCRIPTION

Joint sealer shall be an aluminum gray vapor barrier sealer such as Benjamin Foster's No. 30-45 or an asphalt base sealer such as Lion Nokorode "Low Temp".

M5.1.2 SERVICE

Joint sealer shall be used on all butt edges of single layer insulation or outer layer of multi-layer applications.

M5.2 GLASS CLOTH

M5.2.1 DESCRIPTION

Glass cloth shall be 10 x 10 thread count or 10 x 20 thread count asphalt impregnated glass cloth.

M5.2.2 SERVICE

The 10 x 10 glass cloth is used to reinforce mastic weather barriers. The 10 x 20 thread count cloth is used to reinforce mastic vapor barriers in cold service.

M5.3 WIRE NETTING

M5.3.1 DESCRIPTION

Wire netting shall be 1" HEX pattern, 20 gauge monel, 316 stainless steel, or galvanized poultry netting depending upon environmental conditions.

M5.3.2 SERVICE

Wire netting is used to reinforce insulating cement when thickness of 1-1/2" or greater is required or when used as reinforcing/hold-down for block or mat insulation on large flat surfaces.

M5.4 BANDS

M5.4.1 DESCRIPTION

Bands shall be 3/8", 1/2", or 3/4" wide x .020" thick stainless steel with matching double prong seals.

M5.4.2 SERVICE

M5.4.2.1 Aluminum Jacketing - 3/8" wide bands on 9" centers are used to secure all aluminum jacketing.

M5.4.2.2 Pipe Insulation - Bands 1/2" wide are used on 9" centers to secure insulation on pipe greater than 12" in diameter and equipment with a diameter of 36" or less.

M5.4.2.3 Vessel Insulation - Bands 3/4" wide are used on 12" centers to secure insulation on equipment or pipe with a diameter greater than 36".

M5.5 WIRE

M5.5.1 DESCRIPTION

Wire shall be 16 gauge stainless steel or galvanized.

M5.5.2 SERVICE

Wire is used on 9" centers to secure pipe insulation on lines through 12" diameter. Stainless steel wire is used at high humidity locations and galvanized wire is used at low humidity locations.

M5.6 SCREWS

M5.6.1 DESCRIPTION

Screws shall be No. 8 x 1/2" long cadmium plated or aluminum slotted HEX head or pan head sheet metal screws.

M5.6.2 SERVICE

Sheet metal screws shall be used on 6" centers to secure aluminum pipe or equipment jacketing at low humidity locations. On vertical equipment surfaces at all locations, screws are used at the horizontal laps.

004682

M5.7 WELD PINS

M5.7.1 DESCRIPTION

Weld pins shall be 12 gauge minimum 304 or 316 stainless steel and of sufficient length to project through the insulation being secured for attachment of speed clip.

M5.7.2 SERVICE

Weld pin spacing is optional depending on service and type of insulation. Project engineer should specify. Generally, spacing should never exceed 2'0" c-c. At edges and projections such as nozzles, spacing should be closer.

M5.8 SPEED CLIPS

M5.8.1 DESCRIPTION

Speed clips shall be push-on type of 30 gauge sheet metal of either round or square type. They shall be a minimum of 1-1/2" diameter or 1-1/2" square.

M5.8.2 SERVICE

All weld pins shall be topped with speed clips. If weld pins and speed clips are used in conjunction with wire netting, the weld pin should protrude through the netting with the speed clip on the outside of the netting.

M5.9 CHIL-SPRINGS

M5.9.1 DESCRIPTION

Chil-springs shall be either 4" or 2" long, T-302 stainless steel material with a 600°F service temperature. As manufactured by Childers Products Co. or equal.

M5.9.2 SERVICE

Chil-springs are used in stainless steel securement bands on large diameter equipment to allow for expansion or contraction. One Chil-spring should be used about every 50 feet of strapping if excessive expansion/contraction is expected (i.e., > 2" growth).

004684

TABLE 1
PIPING & EQUIPMENT - TEMPERATURE RANGE VS THICKNESS
CALCIUM SILICATE, CALCIUM SILICATE/FIBERGLASS

NPS-INCH	THICKNESS @ °F 450	500	550	600	650	700	750	800	900	1000	
0.75	2.5	2.5	2.5	2.5	3.0	3.0	3.0	3.0	3.0	3.0	Calcium Silicate
1	2.5	2.5	3.0	3.0	3.0	3.0	3.0	3.0	3.0	3.0	
1.5	2.5	2.5	3.0	3.0	3.0	3.0	3.0	3.0	3.0	3&1	Calcium Silicate & Fiberglass*
2	2.5	3.0	3.0	3.0	3.0	3.0	3.0	3.0	3.0	3&2	
3	3.0	3.0	3.0	3.0	3.0	3.0	3.0	3&1	3&2	3&2	
4	3.0	3.0	3.0	3.0	3.0	3.0	3.0	3&1	3&2	6.0	
6	3.0	3.0	3.0	3.0	3.0	3&1½	3&1½	3&1½	5.5	6.0	Calcium Silicate**
8	3.0	3.0	3.0	3.0	3.0	3&1	3&1½	3&1½	5.5	6.0	
10	3.0	3.0	3.0	3.5	3&1½	3&1½	3&1½	3&1½	6.0	6.0	
12	3.0	3.0	3.0	3.5	3&1½	3&1½	3&2	3&2	6.0	6.0	
14	3.0	3.0	3.5	3&1½	3&1½	3&2	3&2	3&2½	6.0	6.0	
16	3.0	3.0	3&1	3&1½	3&1½	3&2	3&2	6.0	6.0	6.0	
18	3.0	3.0	3&1½	3&1½	3&1½	3&2	3&2	6.0	6.0	6.0	
20	3.0	3.0	3&1½	3&1½	3&2	3&2	3&2	6.0	6.0	6.0	
24	3.0	3.0	3&1½	3&1½	3&1½	3&2	6.0	6.0	6.0	6.0	
26	3.0	3.5	3&1½	3&1½	3&1½	3&2	6.0	6.0	6.0	6.0	
28	3.0	3.5	3&1½	3&1½	3&1½	3&2	6.0	6.0	6.0	6.0	
30	3.0	3.5	3&1½	3&1½	3&1½	3&2	6.0	6.0	6.0	6.0	
36	3.0	3&1	3&1½	3&1½	3&2	3&2	6.0	6.0	6.0	6.0	
Flat	3.0	6.0	6.0	6.0	6.0	6.0	6.0	6.0	6.0	6.0	

*First Number = Calcium Silicate Thickness, 1st Layer (To be applied as two, 1½" layers)
Second Number = Fiberglass Thickness, 2nd Layer
**All Calcium Silicate Required in this Region Because Interface Temperatures Eliminate Fiberglass Outer Layers

TABLE 2

PIPING & EQUIPMENT - TEMPERATURE RANGE VS THICKNESS

MINERAL WOOL

004685

8/1/77

NPS - INCH	THICKNESS @ °F									
	450	500	550	600	650	700	750	800	900	1000
0.75	2.0	2.0	2.0	2.5	2.5	2.5	3.0	3.0	3.5	3.5
1	2.0	2.0	2.0	2.5	3.0	3.0	3.0	3.5	3.5	4.0
1.5	2.0	2.0	2.0	3.0	3.0	3.0	3.5	3.5	4.0	4.0
2	2.0	3.0	3.0	3.5	3.5	4.0	4.0	4.0	4.0	4.0
3	3.0	3.0	3.5	3.5	4.0	4.0	4.0	4.0	4.0	5.0
4	3.0	3.0	3.5	4.0	4.0	4.0	4.0	4.0	5.0	5.5
6	3.5	3.5	4.0	4.0	4.0	4.0	4.0	4.0	5.5	6.0
8	3.5	3.5	4.0	4.0	4.0	4.0	4.0	4.0	6.0	6.0
10	3.5	4.0	4.0	4.0	4.0	4.0	4.0	4.0	6.0	6.0
12	3.5	4.0	4.0	4.0	4.0	4.0	4.0	4.0	6.0	6.0
14	4.0	4.0	4.0	4.0	4.0	4.0	4.0	4.0	6.0	6.0
16	4.0	4.0	4.0	4.0	4.0	4.0	4.0	4.0	6.0	6.0
18	4.0	4.0	4.0	4.0	4.0	4.0	4.0	4.0	6.0	6.0
20	4.0	4.0	4.0	4.0	4.0	4.0	4.0	4.0	6.0	6.0
24	4.0	4.0	4.0	4.0	4.0	4.0	4.0	4.0	6.0	6.0
26	4.0	4.0	4.0	4.0	4.0	4.0	4.0	4.0	6.0	6.0
28	4.0	4.0	4.0	4.0	4.0	4.0	4.0	4.0	6.0	6.0
30	4.0	4.0	4.0	4.0	4.0	4.0	4.0	4.0	6.0	6.0
36	4.0	4.0	4.0	4.0	4.0	4.0	4.0	4.0	6.0	6.0
Flat	4.0	4.0	4.5	6.0	6.0	6.0	6.0	6.0	6.0	6.0

TABLE 3

PIPING & EQUIPMENT - TEMPERATURE RANGE VS THICKNESS - HOT SERVICE

FOAMGLAS

004686

NPS INCH	90	100	150	200	250	300	350	400	450	500	550	600	650	700	750	800
0.75	-	-	-	1.5	1.5	2.5	2.5	2.5	2.5	3.0	3.0	3.0	3.5	3.5	3.5	3.5
1	-	-	-	1.5	2.0	2.5	2.5	2.5	3.0	3.0	3.0	3.0	3.5	3.5	3.5	4.0
1.5	-	-	1.5	2.0	2.0	2.5	2.5	3.0	3.0	3.0	3.5	3.5	3.5	3.5	4.0	4.0
2	-	-	1.5	2.0	2.5	2.5	2.5	3.0	3.0	3.5	3.5	4.0	4.0	4.0	4.0	4.0
3	-	-	1.5	2.0	2.5	3.0	3.0	3.5	3.5	4.0	4.0	4.0	4.0	4.0	4.0	5.5
4	-	-	1.5	2.0	3.0	3.0	3.0	3.5	4.0	4.0	4.0	4.0	4.0	4.5	6.0	6.0
6	-	1.5	2.0	2.5	3.0	3.0	3.0	4.0	4.0	4.0	4.0	4.0	4.0	4.5	6.0	6.0
8	-	1.5	2.0	2.5	3.0	3.0	3.0	4.0	4.0	4.0	4.0	4.0	4.0	4.5	6.0	6.0
10	1.5	1.5	2.0	3.0	3.0	3.0	3.5	4.0	4.0	4.0	4.0	4.5	6.0	6.0	6.0	6.0
12	1.5	1.5	2.0	3.0	3.0	3.0	3.5	4.0	4.0	4.0	4.0	4.5	6.0	6.0	6.0	6.0
14	1.5	1.5	2.5	3.0	3.0	3.5	4.0	4.0	4.0	4.0	4.0	4.5	6.0	6.0	6.0	6.0
16	1.5	1.5	2.5	3.0	3.0	3.5	4.0	4.0	4.0	4.0	4.0	4.5	6.0	6.0	6.0	6.0
18	1.5	1.5	2.5	3.0	3.0	3.5	4.0	4.0	4.0	4.0	4.0	4.5	6.0	6.0	6.0	6.0
20	1.5	1.5	2.5	3.0	3.0	3.5	4.0	4.0	4.0	4.0	4.0	4.5	6.0	6.0	6.0	6.0
24	1.5	1.5	2.5	3.0	3.0	4.0	4.0	4.0	4.0	4.0	4.0	4.5	6.0	6.0	6.0	6.0
26	1.5	1.5	2.5	3.0	3.0	4.0	4.0	4.0	4.0	4.0	4.5	6.0	6.0	6.0	6.0	6.0
28	1.5	1.5	2.5	3.0	3.0	4.0	4.0	4.0	4.0	4.0	4.5	6.0	6.0	6.0	6.0	6.0
30	1.5	1.5	2.5	3.0	3.0	4.0	4.0	4.0	4.0	4.0	4.5	6.0	6.0	6.0	6.0	6.0
36	1.5	2.0	2.5	3.0	3.5	4.0	4.0	4.0	4.0	4.0	4.5	6.0	6.0	6.0	6.0	6.0
Flat	1.5	2.0	3.5	4.0	4.0	4.0	4.0	4.0	4.5	6.0	6.0	6.0	6.0	6.0	6.0	6.0

PIPING & EQUIPMENT - TEMPERATURE RANGE VS THICKNESS
FIBERGLASS

NPS - INCH	THICKNESS @ °F								
	90	100	150	200	250	300	350	400	450
0.75	-	-	-	-	1.5	1.5	1.5	2.0	2.0
1	-	-	-	-	1.5	1.5	1.5	2.0	2.0
1.5	-	-	-	1.5	1.5	2.0	2.0	2.0	2.0
2	-	-	-	1.5	1.5	2.0	2.0	2.0	2.0
3	-	-	1.5	1.5	2.0	2.5	2.5	2.5	2.5
4	-	-	1.5	1.5	2.5	2.5	2.5	2.5	2.5
6	-	-	1.5	2.0	2.5	2.5	2.5	2.5	2.5
8	-	1.5	1.5	2.0	2.5	2.5	2.5	2.5	2.5
10	-	1.5	1.5	2.0	2.5	2.5	2.5	2.5	2.5
12	-	1.5	1.5	2.5	2.5	2.5	2.5	2.5	2.5
14	1.5	1.5	1.5	2.5	2.5	2.5	2.5	2.5	2.5
16	1.5	1.5	2.0	2.5	2.5	2.5	2.5	2.5	2.5
18	1.5	1.5	2.0	2.5	2.5	2.5	2.5	2.5	2.5
20	1.5	1.5	2.0	2.5	2.5	2.5	2.5	2.5	2.5
24	1.5	1.5	2.0	2.5	2.5	2.5	2.5	2.5	2.5
26	1.5	1.5	2.0	2.5	2.5	2.5	2.5	2.5	2.5
28	1.5	1.5	2.0	2.5	2.5	2.5	2.5	2.5	2.5
30	1.5	1.5	2.5	2.5	2.5	2.5	2.5	2.5	2.5
36	1.5	1.5	2.5	2.5	2.5	2.5	2.5	2.5	2.5
Flat	2.5	2.5	2.5	2.5	2.5	2.5	2.5	2.5	2.5

004688

TABLE 5

PROCESS AND ECONOMIC CONDITIONS USED FOR TABLES 1 THROUGH 4

Average Annual Ambient Temperature, °F	- 65.0
Average Annual Wind Velocity, MPH	- 11.0
Bare Surface Emittance	- .8
Insulated Surface Emittance	- .05
System Thermal Efficiency, %	- 100%
Stream Efficiency, %	- 95%
Average Value Natural Gas, $/MM BTU (1977-89)	- 3.70
Latent Heat of Steam, BTU/Lb	- 904
Direct Cost Labor (Jan, 1977)	- 7.00
Months Past Jan, 1977 (Escalation for Labor, Materials)	- 36.0
Rate of Materials Cost Escalation:	
Fiber, %/yr	- 12.
Kalo, %/yr	- 12.
Cel Glass, %/yr	- 2.
Mineral Wool, %/yr	- 2.
Rate of Labor Escalation, %	- 8.
Labor Overhead Factors:	
Fiber, Single Layer	- 2.0
Double Layer >2.5" insulation thickness	- 2.4
Kalo, Single Layer	- 2.
Double Layer >3.0" insulation thickness	- 2.4
Cel Glass, Single Layer	- 2.0
Double Layer >4.0" insulation thickness	- 2.4
Mineral Wool, Single Layer	- 2.0
Double Layer >2.0" insulation thickness	- 2.4
Triple Layer >4.0" insulation thickness	- 2.88
Discount for Celanese Bulk Order, %	- 8%
Aluminum Covering Over All Insulation Types	

TABLE 6

PIPING & EQUIPMENT - TEMPERATURE RANGE VS THICKNESS - COLD SERVICE
CELLULAR GLASS

SURFACES	DESIGN TEMPERATURE DEGREES FAHRENHEIT								
NOMINAL PIPE SIZE	+70°F To 0	-1°F To -50°F	-51°F To -100°F	-101°F To -150°F	-151°F To -200°F	-201°F To -250°F	-251°F To -300°F	-301°F To -350°F	CONDENSATI CONTROL
1. ½-1"	1½"	2½"	3"	3½"	4"	4½"	5"	5½"	1"
1½-2"	2"	3"	3½"	4"	4½"	5"	5½"	6"	1"
3"	2"	3"	4"	4½"	5½"	6"	6½"	6½"	1"
4"	2½"	3½"	4"	4½"	5½"	6½"	6½"	7"	1"
6"	2½"	3½"	4½"	5"	6"	6½"	7½"	8"	1"
8"	2½"	3½"	4½"	5½"	6½"	7"	7½"	8½"	1½"
10-12"	3"	4"	5"	6"	7"	7½"	8½"	9"	1½"
14-18"	3"	4½"	5½"	6½"	7½"	8½"	9"	10"	1½"
20-24"	3"	4½"	6"	7"	8"	8½"	9½"	10½"	1½"
26-36"	3"	4½"	6"	7"	8½"	9"	10"	11"	1½"
2. Equipment									
42-60"	3½"	5"	6½"	7½"	8½"	10"	11"	12"	1½"
66" to Flat	3½"	5½"	6½"	8"	9½"	10½"	11½"	12"	1½"
3. Level Controls, Level Gages & Similar Applications	THICKNESS CAN BE DETERMINED BY SELECTING NEAREST APPROXIMATE PIPE SIZE AND USING THE APPROPRIATE TABLE.								

004689

NOTES: (1) Minimum Thickness for Piping, Vessels and Equipment for Design Conditions: 90°F Ambient Temperature, 80% Relative Humidity, 7-9 BTU Per Hour, Per Sq. Ft., Heat Gain

(2) Personnel Protection - Use +70°F to 0°F Column Thicknesses, *
*Required When Surface Temperature Below 20°F

TABLE 7

INSULATING MATERIALS SUMMARY

(MINIMUM REQUIREMENTS FOR EXTERIOR THERMAL INSULATION FOR PIPE, INSTRUMENTS AND EQUIPMENT)

	TYPE	FORM	TEMPERATURE RANGE
1.	Calcium Silicate (Kaylo), Rigid Hydrous, With Inhibitor to Prevent Stress Corrosion in Alloys	Pipe - Sectional or Segmental, Flat Block	451 to 1000°F
2.	Mineral Fiber, Refractory Fiber, Mat Faced	Pipe - Segmental	451 to 1000°F
3.	Cellular Glass (Foamglass), Rigid Cellular Glass	Pipe - Sectional or Segmental, Flat Block, Beveled Lags	-350 to +800°F
4.	Fiberglass	Pipe - Sectional, Rigid Sheets, Blankets	90 to 450°F
5.	Insulation Cement, Ryder Thermokate #1-MWP or Equal	Mineral Fiber Type	71 to Limits Set by brand
6.	Asbestos Tape	Woven Cloth Tape 1" Wide	180 -
7.	Foamed Plastic	Tubular, Flexible	20 to 180°F
8.	Kaowool, Babcox & Wilson	8 Lb. Density	1800 to 2300°F

8/1/77

004690

WEATHER BARRIER MATERIALS

1. Aluminum Jacketing - 5005 or 3003 alloy with H-14 temper. Sheets or rolls .016" thick with 3/16" corrugations. .02" thick if smooth. Elbows .02" thick with or without attached moisture barrier.
2. Mastic - Polyvinyl acetate emulsion as Benjamin Foster Sealfast with aluminum color or solvent cutback type as Lion Nokorode "Sealkote" or vinyl acrylic as Childers Vy-CRYL or Pittcoat #300 for cold service.
3. Joint Sealer - Aluminum gray vapor barrier as Benjamin Foster's #30-45 or asphalt base sealer as Lion Nokorode "Low Temp".
4. Glass Cloth - Asphalt impregnated glass cloth. 10 x 10 or 10 x 20 thread count.
5. Wire Netting - 1" HEX pattern, 20 gage monel, 316 stainless or galvanized poultry netting.
6. Bands - 3/8", 1/2" or 3/4" wide x .02" thick stainless steel with matching double prong seals.
7. Wire - 16 gage stainless steel or galvanized.
8. Screws - No. 8 x 1/2" long cadmium plated or aluminum slotted HEX head or pan head sheet metal screws.
9. Weld Pins - 12 gage minimum, 304 or 316 stainless steel.
10. Speed Clips - Push-on type, 30 gage sheet metal, 1-1/2" round or 1-1/2" square.
11. Chil-Springs - 4" or 2" type 302 stainless steel as manufactured by [illegible]

E1 SCOPE

E2 ITEMS INSULATED

E3 PURPOSE

E3.1 HOT SERVICE

E3.1.1 GENERAL

E3.1.2 ENERGY CONSERVATION

E3.1.3 TEMPERATURE CONTROL

E3.1.4 PERSONNEL PROTECTION

E3.2 COLD SERVICE

E4 GENERAL

E4.1 OTHER SURFACES INSULATED

E4.2 SURFACE PREPARATION

E4.3 INSULATION SUPPORT

E4.4 PIPING SUPPORTS

E4.5 TRACED LINES

E4.6 ALUMINUM WEATHER BARRIER

E4.7 MASTIC WEATHER BARRIER

E4.8 SURFACES EXPOSED TO FOOT TRAFFIC

E5 DATA FORMS

E5.1 HOT INSULATION DATA FORM

E5.1.1 INSULATION MATERIAL

E5.1.1.1 Piping & 36" Diameter & Smaller Equipment

E5.1.1.2 Equipment Greater Than 36" Diameter

E5.1.1.3 Bent Piping and Tubing

E5.1.1.4 Irregular Surfaces

004691

E5.1.2 WEATHER BARRIER MATERIALS

E5.1.2.1 Straight Run Piping and 36" Diameter and Smaller Equipment

E5.1.2.2 Elbows

E5.1.2.3 Vessel and Exchanger Shells

E5.1.2.4 Irregular Surfaces and Equipment Heads

E5.1.3 INSULATION SECUREMENT

E5.1.3.1 Piping Through 12" Diameter

E5.1.3.2 Piping Greater Than 12" Diameter and Equipment 36" Diameter and Less

E5.1.3.3 Equipment Greater Than 36" Diameter

E5.1.3.4 Equipment With Large Flat Surfaces

E5.1.4 ALUMINUM JACKET SECUREMENT

E5.1.4.1 Piping and 36" Diameter & Smaller Equipment

E5.1.4.2 Equipment Greater Than 36" Diameter

E5.1.5 REINFORCEMENT

E5.1.5.1 Glass Cloth

E5.1.5.2 Wire Netting

E5.1.6 SPECIALTIES

E5.2 COLD INSULATION DATA FORM

E5.2.1 INSULATION MATERIAL

E5.2.1.1 Piping

E5.2.1.2 Equipment

E5.2.1.3 Bent Pipe and Tubing

E5.2.1.4 Irregular Surfaces

E5.2.2 WEATHER BARRIER MATERIALS

004692

E1 SCOPE

This section describes the guidelines to be considered by the engineer in designing and selecting insulation.

E2 ITEMS INSULATED

Pipelines, instruments and equipment to be insulated are defined on the mechanical flow sheets and/or piping drawings.

E3 PURPOSE

E3.1 HOT SERVICE

E3.1.1 GENERAL

Hot service insulation serves four purposes; energy conservation, temperature control, personnel protection, and condensation prevention. The temperature used to determine the need for insulation or insulation thicknes is the normal operating fluid temperature. One exception to this is when piping or equipment has internal insulation or refractory lining, the temperatur that determines insulation thickness is the metal temperature. Care should be taken when insulating refractory lined equipment that metal temperatures remain within acceptable limits.

E3.1.2 ENERGY CONSERVATION

Operating temperatures for which insulation is justified for energy conservation are indicated in the thickness tables in the Materials Section.

E3.1.3 TEMPERATURE CONTROL

In some cases piping or equipment which otherwise would not require insulation will require insulation for close process temperature control.

E3.1.4 PERSONNEL PROTECTION

Operating temperatures above 140°F justify protective insulation. Insulate piping or equipment to a height of 7 ft. above the operating level, or wherever there exists the probability of human contact. Metals such as copper and aluminum should receive personnel protective insulation above 120°F. Thickness for personnel protection should be determined from the tables.

004693

E3.2 COLD SERVICE

Cold service insulation serves two main purposes; to minimize heat gain, and to prevent condensation on the cold surface. All components in cold service insulation systems shall be insulated.

E4 GENERAL

E4.1 OTHER SURFACES INSULATED

In general, because of energy conservation benefits, the following hot surfaces should be insulated:

*Valves
*Flanges
Control Valve Bodies
Expansion Joints
Apparatus Nozzles

Equipment nameplates and steam traps should not be covered with insulation unless extraordinary conditions so dictate.

If possible the above surfaces should be insulated with the same type and thickness insulation as the adjacent connecting pipe or equipment. Good engineering judgement should be used in selecting the form and method of application of insulation to these surfaces (i.e. custom fitted block insulation, cement, preformed enclosures, loose insulations, etc.).

E4.2 SURFACE PREPARATION

The pipe, instruments or equipment to be insulated shall be cleaned of all oil, water and other foreign matter before insulation is installed. Insulated carbon steel surfaces operating under 200°F shall have a protective coating on the steel in accordance with Celanese Paint Specification #1, revised.

E4.3 INSULATION SUPPORT

Insulation on vertical pipe 3" and larger diameter shall be supported near the bottom of the run if required. Additional supports will be used at intervals dependent upon the insulation materials being used. A spacing of 15' between supports is generally adequate.

Insulation on vertical vessels shall have insulation supports or the stiffening rings may be used to provide the supports. Insulation support spacing on large diameter equipment is covered in the fabricated equipment specifications.

004694

*See Tables S-I and S-II in Supplement Section for insulation guidelines.

E4.4 PIPING SUPPORTS

A minimum clearance of 1" should be maintained between the pipe supporting member and the insulation. This may be achieved by shoe height or notching of insulation.

E4.5 TRACED LINES

Pipe requiring steam or water tracing should be insulated. Provisions shall be made to allow room for the tracer tubing such as using insulation one size larger than line size.

E4.6 ALUMINUM WEATHER BARRIER

See Table 8 for coverage.

E4.7 MASTIC WEATHER BARRIER

Individual requirements should be calculated.

E4.8 SURFACES EXPOSED TO FOOT TRAFFIC

When insulating surfaces subject to foot traffic, a hard material (such as Kaylo) should be used or the surface protected by special walking areas.

E5 DATA FORMS

Data forms for the specification of specific materials to be used for the design, purchase and application of an insulation system are as follows:

DF-1 Heat Insulation Data Form

DF-2 Cold Insulation Data Form

To expedite filling out the data forms, numbers appear on the forms that correspond to the following paragraphs.

004695

E5.1 HOT INSULATION DATA FORM

E5.1.1 INSULATION MATERIAL

The selection of an insulation material for a particular application must take into consideration such factors as operating temperature, temperature limits of the materials, availability of material, cost, required thickness, and maximum allowable surface temperature and heat loss. The materials listed below for a given service are those normally used by the Chemical Company. See the Materials Section, M2.1.1, M2.2.1, M2.3.1, M2.4.1, M2.5.1, M2.6.1, and M2.7.1 for description, service, and thickness for these materials. If other materials are used for temperature other than those shown in Tables 1-4, a Thickness Table must be included.

E5.1.1.1 Piping & 36" Diameter & Smaller Equipment - Carbon steel piping and equipment is insulated with fiberglass material, see M2.4.2, for operating temperatures up to 450°F. Above 450°F either calcium silicate, see M2.1.2; mineral wool insulation, see M2.2.2; or Kaowool, see M2.8; is used. The upper temperature limit varies with the different materials and for operating temperatures above these limits other special high temperature materials may be required.

Alloy piping and equipment is also insulated with fiberglass material, see M2.4.2, for operating temperatures up to 450°F. Between 450°F and 1000°F cellular glass, see M2.3.2; calcium silicate, see M2.1.2; or mineral wool, see M2.2.2; is used. Above 1000°F material must be specified to meet the requirements of temperature and yet not contribute to the initiation of stress corrosion cracking (see M2.2.2 and M2.8).

E5.1.1.2 Equipment Greater Than 36" Diameter - Large diameter equipment is generally insulated with cellular glass, see M2.3.2, for operating temperatures up to 800°F. Above 800°F material must be specified to meet the requirements of the application, see 5.1.1. For temperatures between 90 and 450°F fiberglass may be used.

E5.1.1.3 Bent Piping and Tubing - Bent piping and tubing up to 2" IPS is insulated with foamed plastic insulation, see M2.7.2, for operating temperatur up to 180°F. Above 180°F use asbestos tape, see M2.6.2.

E5.1.1.4 Irregular Surfaces - Irregular surfaces are insulated with insulating cement, see M2.5.2. For surfaces operating above 1000°F thickness must be specified.

E5.1.2 WEATHER BARRIER MATERIALS

Weather barriers used are aluminum, see M4.1.1, and mastic, see M4.2.1. The material used varies with the component insulated, environment, type of insulation, labor and material costs, and plant preference. For type "E" specify the brand or type of mastic. Type "F" is used for specials such as plastic, stainless, etc.

E5.1.2.1 Straight Run Piping and 36" Diameter and Smaller Equipment - All locations use aluminum jacketing, see M4.1.2; material cost and plant preference dictates the choice of smooth or corrugated type. Coastal locations use jackets with moisture barrier over calcium silicate insulation.

E5.1.2.2 Elbows - Material and labor cost and plant preference will dictate the choice of mastic, see M4.2.2, or aluminum, see M4.1.2, weather barrier for elbows.

E5.1.2.3 Vessel and Exchanger Shells - The weather barrier used on vessel and exchanger shells is either mastic, see M4.2.2, or aluminum, see M4.1.2.

E5.1.2.4 Irregular Surfaces and Equipment Heads - Mastic is used on irregular surfaces where aluminum jacketing is impractical, see M4.2.2.

004697

E5.1.3 INSULATION SECUREMENT

The insulation is secured by using galvanized or stainless steel tie wire, see M5.5.1, or stainless steel bands, see M5.4.1.

E5.1.3.1 Piping Through 12" Diameter - Coastal locations use stainless steel wire and non-coastal locations use galvanized wire, see M5.5.2.

E5.1.3.2 Piping Greater Than 12" Diameter and Equipment 36" Diameter and Less - For large diameter pipe and small diameter equipment use 1/2" wide bands, see M5.4.2.2.

E5.1.3.3 Equipment Greater Than 36" Diameter - For large diameter equipment use 3/4" wide bands, see M5.4.2.3, and Chil-springs, see M5.9, if required.

E5.1.3.4 Equipment With Large Flat Surfaces - For all large flat or nearly flat surfaces such as tops of large diameter tanks that do not lend themselves to banding, a system of weld pins, speed clips and wire netting should be employed for securing the insulation to the surface being insulated. For weld pin spacing see M5.7.2.

E5.1.4 ALUMINUM JACKET SECUREMENT

Aluminum jacket material is secured by the use of stainless steel bands, see M5.4.1, and/or sheet metal screws, see M5.6.1. Aluminum screws may be preferred at coastal locations. Choice of HEX head or pan head depends on tool used by insulators.

E5.1.4.1 Piping and 36" Diameter & Smaller Equipment - For securing jacket material on piping and small diameter equipment 3/8" wide bands, see M5.4.2.1, or sheet metal screws, see M5.6.2, are used depending on material and labor costs, and plant preference at a particular location.

E5.1.4.2 Equipment Greater Than 36" Diameter - For securing jacket material on large diameter equipment 3/8" wide bands, see M5.4.2.1, or sheet metal screws, see M5.6.2, are used depending on material and labor costs, and plant preference at a particular location. Horizontal and vertical laps on vertical equipment at all plants are secured with screws.

E5.1.5 REINFORCEMENT

Glass cloth reinforcement, see M5.2.1, is required for mastic weather barrier. Wire netting reinforcement, see M5.3.1, is required for thick applications of insulating cement or to act as reinforcing/hold-down on block or mat type insulation on large flat surfaces.

E5.1.5.1 Glass Cloth - Specify the type and weave of glass cloth to be used, see M5.2.2.

E5.1.5.2 Wire Netting - Specify the material, see M5.3.1, depending on availability and cost.

E5.1.6 SPECIALTIES

This space is used to specify special materials, items to be insulated, thickness tables or brand names desired to complete the Insulation Data Form.

E5.2 COLD INSULATION DATA FORM

E5.2.1 INSULATION MATERIAL

The selection of an insulation material for particular application must take into consideration such factors as operating temperature, temperature limits of the materials, availability of materials, cost, required thickness, minimum allowable surface temperature, and maximum heat gain. The two materials normally used by the Chemical Company are cellular glass, see M2.3.1 and M3.1.1, and foamed plastic, see M2.7.1. Foamed plastic is mainly used on bent pipe and tubing but may be used for any application where compressive strength is not required.

If other materials are used or if the above materials are used for operating temperatures other than those shown in Table 6, a thickness table must be included.

E5.2.1.1 Piping - Cellular glass is used to insulate pipe and small diameter equipment, see M2.3.2 and M3.1.2.

E5.2.1.2 Equipment - Cellular glass is used to insulate equipment, see M2.3.2 and M3.1.2.

E5.2.1.3 Bent Pipe and Tubing - Foamed plastic is used to insulate bent pipe and tubing, see M2.7.2.

E5.2.1.4 Irregular Surfaces - Cellular glass is used to box in and insulate irregular surfaces, see M2.3.2 and M3.1.2.

E5.2.2 WEATHER BARRIER MATERIALS

Weather barriers used are aluminum, see M4.1.1, and mastic, see M4.2.1. The material used varies with the component insulated environment, labor and material costs, and plant preference. For type "C" specify the brand or type of mastic to be used. Type "D" is used for specials such as plastic, stainless, etc.

004700

004701

ALUMINUM JACKETING, BANDS, CLIPS, & SCREWS

INSULATION THICKNESS, INCHES

PIPE SIZE IN.	1	1-1/2	2	2-1/2	3	3-1/2	4	5	6	7	8	9	10	11
3/4	1.09	1.41	1.69	2.15	2.43	2.73	3.00	3.60	4.24	4.81	5.38	5.94	6.51	7.08
1	1.26	1.55	1.87	2.15	2.43	2.73	3.00	3.60	4.24	4.81	5.38	5.94	6.51	7.08
1-1/2	1.41	1.69	2.15	2.43	2.72	3.00	3.32	3.89	4.53	5.09	5.66	6.23	6.79	7.36
2	1.55	1.85	2.15	2.43	2.72	3.00	3.32	3.89	4.53	5.09	5.66	6.23	6.79	7.36
3	1.85	2.15	2.43	2.72	3.00	3.32	3.60	4.24	4.81	5.38	5.94	6.51	7.08	7.64
4	2.15	2.43	2.72	3.00	3.32	3.60	3.89	4.53	5.09	5.66	6.23	6.79	7.36	7.93
6	2.72	3.00	3.32	3.60	3.89	4.24	4.53	5.09	5.66	6.23	6.79	7.36	7.93	8.50
8	3.32	3.60	3.89	4.24	4.53	4.81	5.09	5.38	6.23	6.79	7.36	7.93	8.50	9.06
10	3.89	4.24	4.53	4.81	5.09	5.38	5.66	6.23	6.79	7.36	7.93	8.50	9.06	9.63
12	4.53	4.81	5.09	5.38	5.66	5.94	6.23	6.79	7.36	7.93	8.50	9.06	9.63	10.20
14	4.81	5.09	5.38	5.66	5.94	6.23	6.51	7.08	7.64	8.21	8.78	9.35	9.91	10.48
16	5.38	5.66	5.94	6.27	6.51	6.79	7.08	7.64	8.21	8.78	9.35	9.91	10.48	11.05
18	5.94	6.23	6.51	6.79	7.08	7.36	7.64	8.21	8.78	9.35	9.91	10.48	11.05	11.62
20	6.51	6.79	7.08	7.36	7.64	7.93	8.21	8.78	9.35	9.91	10.48	11.05	11.62	12.18
24	7.64	7.93	8.21	8.50	8.78	9.06	9.35	9.91	10.48	11.05	11.62	12.18	12.75	13.32
26	8.21	8.50	8.78	9.06	9.35	9.63	9.91	10.48	11.05	11.62	12.18	12.75	13.32	13.88
28	8.78	9.06	9.35	9.63	9.91	10.20	10.48	11.05	11.62	12.18	12.75	13.32	13.88	14.45
30	9.35	9.63	9.91	10.20	10.48	10.76	11.05	11.62	12.18	12.75	13.32	13.88	14.45	15.02
36	11.05	11.33	11.62	11.90	12.18	12.47	12.83	13.32	13.88	14.45	15.02	15.59	16.15	16.72

1. No. of Square Feet of Jacketing* Per Lineal Foot of Insulated Pipe
   (Compensating for 3" Overlap Per Lin. Yd. & 3" Lap on Circumference)
2. Banding - Number from Above Table x 1.3 Gives Feet of Banding Per Foot of Insulated Pipe
3. Clips - (Feet of Insulated Pipe) x (1.3) = Clips Required
4. Screws - (Feet of Insulated Pipe) x (3) = Screws Required

*Jacketing commonly available in rolls 36" x 100'. Also available 48" x 100'.

E5.1.1 INSULATION MATERIAL

E5.1.1.1 PIPING AND 36"DIAMETER AND SMALLER EQUIPMENT

CARBON STEEL		ALLOY	
to 450 °F,	_____	to 450 °F,	_____
451°F to _____ °F,	_____	451°F to _____ °F,	_____
___°F to _____ °F,	_____	___°F to _____ °F,	_____

E5.1.1.2 EQUIPMENT GREATER THAN 36" DIAMETER

To 800°F _____ 801°F to _____ °F, _____

E5.1.1.3 BENT PIPE AND TUBING TO 180°F _____ above 180°F _____

E5.1.1.4 IRREGULAR SURFACES _____

E5.1.2 WEATHER BARRIER MATERIALS USED SHALL BE ONE OF THE FOLLOWING TYPES:

Type A - .016" thick aluminum with 3/16" corrugations and without moisture barrier
Type B - .016" thick aluminum with 3/16" corrugations and with moisture barrier
Type C - .020" thick aluminum smooth without moisture barrier
Type D - .020" thick aluminum smooth with moisture barrier
Type E - _____mastic with glass cloth reinforcement
Type F - _____

E5.1.2.1 STRAIGHT RUN PIPING AND 36"DIAMETER AND SMALLER EQUIPMENT

C.S. to 450°F type_____, 451°F to_____ type_____, _____°F to _____°F type_____
Alloy to 450°F type_____, 451°F to_____ type_____, _____°F to _____°F type_____

E5.1.2.2 ELBOWS

C.S. to 450°F type_____, 451°F to_____ type_____, _____°F to _____°F type_____
Alloy to 450°F type_____, 451°F to_____ type_____, _____°F to _____°F type_____

E5.1.2.3 VESSEL AND EXCHANGER SHELLS

Horizontal type_____ Vertical type_____

E5.1.2.4 IRREGULAR SURFACES AND EQUIPMENT HEADS TYPE_____

E5.1.3. INSULATION SECUREMENT

E5.1.3.1 PIPING THROUGH 12"DIAMETER, _____WIRE TIES.

E5.1.3.2 PIPING GREATER THAN 12"DIAMETER AND EQUIPMENT 24" DIAMETER AND LESS, ½" WIDE BANDS.

E5.1.3.3 EQUIPMENT GREATER THAN 36"DIAMETER 3/4" WIDE BANDS

E5.1.3.4 EQUIPMENT WITH LARGE FLAT SURFACES - WELD PINS, SPEED CLIPS

E5.1.4 ALUMINUM JACKET SECUREMENT

E5.1.4.1 PIPING AND 36"DIAMETER AND SMALLER EQUIPMENT_____

E5.1.4.2 EQUIPMENT GREATER THAN 36"DIAMETER_____

E5.1.5 REINFORCEMENT

E5.1.5.1 GLASS CLOTH_____

E5.1.5.2 WIRE NETTING_____

E5.1.6 SPECIALTIES

*Vendor to Specify

004702

E5.2.1 INSULATION MATERIAL

E5.2.1.1 PIPING, _____

E5.2.1.2 EQUIPMENT, _____

E5.2.1.3 BENT PIPE AND TUBING _____

E5.2.1.4 IRREGULAR SURFACES _____

E5.2.2 WEATHER BARRIER MATERIALS USED SHALL BE ONE OF THE FOLLOWING TYPES:
Type A - .016" thick aluminum with 3/16" corrugations without moisture barrier
Type B - .020" thick aluminum smooth without moisture barrier
Type C - _____ mastic with glass cloth reinforcement.
Type D - _____

E5.2.2.1 STRAIGHT RUN PIPING AND 36" AND SMALLER EQUIPMENT TYPE _____

E5.2.2.2 ELBOWS TYPE _____

E5.2.2.3 VESSEL AND EXCHANGER SHELLS
Horizontal type _____ Vertical type _____

E5.2.2.4 IRREGULAR SURFACES AND EQUIPMENT HEADS TYPE _____

E5.1.3 INSULATION SECUREMENT

E5.1.3.1 PIPING THROUGH 12" DIAMETER _____ WIRE TIES

E5.1.3.2 PIPING GREATER THAN 12" DIAMETER, AND EQUIPMENT 24" DIAMETER AND LESS, $\frac{1}{2}$" WIDE BANDS.

E5.1.3.3 EQUIPMENT GREATER THAN 36" DIAMETER, 3/4" WIDE BANDS.

E5.1.3.4 EQUIPMENT WITH LARGE FLAT SURFACES - WELD PINS, SPEED CLIPS

E5.1.4 ALUMINUM JACKET SECUREMENT

E5.1.4.1 PIPING AND 36" DIAMETER AND SMALLER EQUIPMENT _____

E5.1.4.2 EQUIPMENT GREATER THAN 36" DIAMETER _____

E5.1.5 GLASS CLOTH REINFORCEMENT _____

E5.1.6 SPECIALTIES

*Vendor to Specify

004703

A1 SCOPE

A2 GENERAL

A2.1 TIMING

A2.2 SURFACE PREPARATION

A2.3 DRY INSULATION

A2.4 PIPING SUPPORTS

A2.4.1 HOT SERVICE

A2.4.2 COLD SERVICE

A3 APPLICATION PROCEDURE - HOT SERVICE

A3.1 STRAIGHT PIPE

A3.1.1 INSULATION

A3.1.1.1 Placement

A3.1.1.2 Joint Sealer

A3.1.1.3 Exposed Ends

A3.1.1.4 Securement

A3.1.2 ALUMINUM WEATHER BARRIER

A3.1.2.1 Application

A3.1.2.2 Securement

A3.1.3 MASTIC WEATHER BARRIER

A3.2 ELBOWS

A3.2.1 INSULATION

A3.2.2 INSULATING CEMENT

A3.2.3 WEATHER BARRIER

004704

A3.3 FLANGES, FLANGED FITTINGS, AND VALVES

A3.4 EQUIPMENT

A3.4.1 SHELL INSULATION

A3.4.1.1 Placement

A3.4.1.2 Joint Sealer

A3.4.1.3 Securement

A3.4.1.4 Cork-Filled Mastic

A3.4.1.5 Weather Barrier

A3.5 IRREGULAR SURFACES

A3.5.1 INSULATION

A3.5.2 WEATHER BARRIER

A4 APPLICATION PROCEDURE - COLD SERVICE

A4.1 PIPING, VALVES AND FITTINGS

A4.1.1 PIPING

A4.1.2 VAPOR BARRIER MASTIC FINISH PIPING & EQUIPMENT

A4.1.3 ALUMINUM JACKETING

A4.1.3.1 Piping

A4.1.3.2 Equipment and Vessels

A4.1.4 CONTRACTION/EXPANSION JOINTS

A4.1.5 FITTINGS, VALVES AND FLANGES

A4.1.5.1 Fittings

A4.1.5.2 Valves

A4.1.5.3 Flanges

004705

A4.2 EQUIPMENT

A4.2.1 EQUIPMENT AND VESSELS

A4.3 PERSONNEL PROTECTION

A4.4 COLD INSULATION DRAWINGS

004706

A1 SCOPE

This section describes the field application of the thermal insulation described in the materials requirements section.

A2 GENERAL

A2.1 TIMING

Insulation shall not be applied to any flanged, machined, or welded surfaces until they have passed all field tests, including hydrostatic and have been released for insulation by the field engineer.

A2.2 SURFACE PREPARATION

The pipe, instruments or equipment to be insulated shall be cleaned of all oil, water and other foreign matter before insulation is installed. Insulated carbon steel surfaces operating under 200°F shall have a protective coating on the steel in accordance with Celanese Paint Specification #1, revised.

A2.3 DRY INSULATION

All insulation shall be protected from moisture before and during application. If applied insulation should get wet before it is jacketed, it shall be thoroughly dried by heating the line or by other means before it is sealed with weatherproofing. Insulation showing signs of deterioration after drying should be replaced.

A2.4 PIPING SUPPORTS

A2.4.1 HOT SERVICE

A minimum clearance of 1" should be maintained between the pipe supporting member and the insulation. This may be achieved by shoe height or notching of insulation.

A2.4.2 COLD SERVICE

Low-temperature piping below 32°F shall be supported on outside of insulated surfaces if possible, with metal cradle to provide for adequate support and distribution of weight. Cradle shall be secured with at least two insulation bands looped about cradle and insulation. When pipe is suspended with hangers attached directly to the pipe, the hanger shall be insulated the same as the adjoining pipe. Insulation shall extend up the hanger for a distance of four times the specified thickness.

004707

A3 APPLICATION PROCEDURE - HOT SERVICE

A3.1 STRAIGHT PIPE

A3.1.1 INSULATION

A3.1.1.1 Placement - Pipe insulation shall be applied with tightly butted end joints in a staggered position. Additional layers, where specified, shall be applied in the same manner as the first layer, with side and end joints staggered over joints of preceding layer so that no two joints coincide, except where they cross at right angles.

A3.1.1.2 Joint Sealer - All butt edges and ends of the outer layer of insulation shall be buttered with joint sealer before application. The joints shall be drawn together when the insulation is applied so that only a very thin, vapor-tight coat separates the sections of insulation.

A3.1.1.3 Exposed Ends - Exposed ends are to be beveled and covered with aluminum pipe bevels and flashed with high temperature sealer or they may be weatherproofed with fiberglass cloth and mastic.

A3.1.1.4 Securement - Secure the insulation with tie wire or bands depending upon the pipe diameter.

A3.1.2 ALUMINUM WEATHER BARRIER

A3.1.2.1 Application - Aluminum jacketing shall be applied with longitudinal and circumferential joints lapped 2" minimum. Joints shall be positioned to shed water and be away from prevailing wind.

A3.1.2.2 Securement - Jacketing shall be secured with bands, see M5.4.2, or screws, see M5.6.2.

004708

A3.1.3 MASTIC WEATHER BARRIER

Outer surface of insulation shall receive an adhesive coat of mastic. While still tacky, reinforcing glass cloth shall be stretched taut and thoroughly embedded in the coating, care being exercised that the weave is not stretched and that the cloth is overlapping approximately 1-1/2". Before the surface becomes dry to touch, a second coating shall be applied and allowed to dry. Total dry thickness of coating shall be a minimum of 1/8". Cloth shall not be visible on the finished surface. This same application also applies to a weld pin, speed clip and wire netting system.

A3.2 ELBOWS

A3.2.1 INSULATION

If preformed elbows are not used, fabricate elbow cover from mitered segments of pipe covering secured with wire ties.

A3.2.2 INSULATING CEMENT

When mastic weather barrier is specified, insulating cement is used over fiberglass, calcium silicate, or mineral wool insulation to give the surface a smooth finish and to fill all cracks and voids.

A3.2.3 WEATHER BARRIER

Aluminum or mastic weather barrier shall be applied in accordance with paragraphs A3.1.2 and A3.1.3.

A3.3 FLANGES, FLANGED FITTINGS AND VALVES

Flanges and valves should be insulated with the same type and thickness insulation as adjoining piping where possible, but should not exceed the thickness of adjacent piping. See Tables S-I and S-II in Supplement Section for insulation guidelines.

A3.4 EQUIPMENT

A3.4.1 SHELL INSULATION

004709

A3.4.1.1 Placement - Equipment with diameters 36" and below shall be insulated as pipe. Insulation shall be applied to shell using standard broken joint method, starting with alternate full and half length lags. Application of lags shall start at one end, proceeding circumferentially and then axially. Each lag shall be tightly butted against adjacent lags. Where multi-layer application is required, all joints shall be staggered over joints of the preceding layer.

A3.4.1.2 Joint Sealer - Joint sealer shall be applied to insulation in accordance with paragraph A3.1.1.2.

A3.4.1.3 Securement - Secure the insulation with bands or with weld pins and speed clips. Chil-springs if required should be used one for every 50 feet of banding.

A3.4.1.4 Weather Barrier - Aluminum or mastic weather barrier shall be applied in accordance with paragraphs A3.1.2 and A3.1.3.

A3.5 IRREGULAR SURFACES

A3.5.1 INSULATION

Irregular surfaces in hot service shall be insulated with insulating cement. Insulating cement shall be applied with a trowel on the surface to be insulated, filling all depressions for entire depth to eliminate voids of any nature. Care shall be exercised that the thickness of each application will be no greater than that which will set on vertical surfaces without excessive cracking upon drying. When sufficiently dry, additional applications may be made as required to build cement to full specified thickness. Where specified thickness of cement insulation exceeds 1-1/2", cement shall be reinforced with one layer of wire netting for each additional 1-1/2", or a part thereof, uniformly embedded midway between metal and finished surface.

A3.5.2 WEATHER BARRIER

Mastic weather barrier shall be applied in accordance with paragraph A3.1.3.

A4 APPLICATION PROCEDURE - COLD SERVICE

A4.1 PIPING, VALVES AND FITTINGS

A4.1.1 PIPING

Pipe insulation shall be applied using the staggered joint method. Insulation over two inches thick shall be applied in layers. The bare surface of all layers shall receive a coating of Hydrocal B-11 or equal sufficient to fill the surface cells and permitted time to dry before being applied to the pipe. All butt edges, ends and the surface of all chips and fill pieces shall be pulled together leaving a complete but very thin vapor seal coating separating the sections of insulation. Insulation shall be free of voids and all joints shall be tightly butted. Each layer of insulation shall be secured in place with 1/2-inch wide x 0.020-inch thick stainless steel or monel metal (quarter hard) bands on 9-inch centers.

Care must be taken to avoid cracking the foamglass insulation when applying the metal bands. A vapor barrier as described in section 4.1.2 shall be applied at this time. After application of vapor barrier the insulation shall be covered with a metal jacket as described in section 4.1.3.

Vertical lines shall be provided with welded or bolted insulation support rings not more than 24 feet apart.

Hangers or supports shall be on the outside of the insulation and shall not be in contact with the pipe. Curved metal cradles shall be used between the support and the insulation jacket. Cradles shall be secured with two circumferential bands.

In the event hangers are fastened directly to the pipe, the hanger shall also be insulated a distance outward equal to four times the insulation thickness.

Shield and hanger spacing shall be designed to limit the compressive stress between hanger and insulation to 33 psig.

A4.1.2 VAPOR BARRIER MASTIC FINISH PIPING AND EQUIPMENT

Over the installed and sealed foamglass insulation apply a tack coat of Pittcote #300 or approved equal vapor barrier mastic at the rate of 2 gallons per 100 sq. ft. While this coat is still tacky apply a layer of asphalt in pregnated 10 x 20 mesh glass cloth with a minimum of 4" overlap at all joints. The glass fabric shall be applied smooth without wrinkles or loose ends. After applying glass fabric and before the first tack coat has cured a final coat of vapor barrier mastic Pittcote #300 or approved equal shall be applied at a rate of 4 gallons per 100 sq. ft. There shall be no glass fabric visible through the final coat of vapor barrier mastic.

A4.1.3 ALUMINUM JACKETING

A4.1.3.1 Piping - Shall be weatherproofed wherever possible with a jacket of 0.016-inch thick 3/16-inch corrugated sheet copper-free aluminum with a factory attached moisture barrier as manufactured by Childers Products Company. The aluminum jacketing shall be secured to the pipe with 304 stainless steel bands 1/2-inch wide x 0.020-inch thick located externally over the aluminum jacketing on 9-inch centers. Each individual jacket shall be applied with a 3-inch minimum lap at all joints and arranged to shed water. On horizontal pipe the jacketing shall have an overlap originating from the top of pipe and terminating on the side. All longitudinal and vertical joints shall be away from the prevailing wind.

A4.1.3.2 Equipment and Vessels - Horizontal vessels shall be jacketed with 0.016-inch thick flat aluminum sheets with a factory applied moisture barrier. Vertical vessels shall be jacketed with 0.020-inch thick 1-1/4 inch corrugated aluminum sheets with a factory applied moisture barrier. Jacketing on both vertical and horizontal vessels shall be lapped at least 3 inches and secured in place with 3/4-inch wide x 0.020-inch thick bands placed on 12-inch centers. On vertical vessels figure S clips shall be used at each circumferential lap for additional support. On horizontal vessels or equipment the jacketing shall have an overlap originating at the top and terminating on the side. All longitudinal and vertical joints shall be away from the prevailing wind. All joints shall be arranged to shed water.

A4.1.4 CONTRACTION/EXPANSION JOINTS

On Vertical Lines - The insulation shall be supported by support rings at 12-foot intervals. A one-inch contraction joint as detailed in Drawing No. 34-11 shall be provided below each support ring.

On Horizontal Lines - A 1/2-inch minimum contraction joint as detailed in Drawing No. 34-9 shall be provided every 10 feet.

On either vertical or horizontal expansion/contraction joints, Pittseal No. 3 or equal sealer shall be used between each layer of foamglass insulation to provide a slip plane.

Mechanical expansion joints shall be insulated as detailed in Drawing No. 34-13.

A4.1.5 FITTINGS, VALVES AND FLANGES

A4.1.5.1 Fittings - Where possible to insulate fittings with preformed fabricated insulation segments the same procedures as specified for cold piping shall be followed. Fitting insulation shall be sized to match the adjacent piping insulation and shall provide a step-type juncture with the straight run piping insulatio All field fabricated segments of foamglass insulation shall be adhered with hot asphalt through the entire thickness of the insulation. The hot asphalt shall be held at the lowest workable temperature to assure a complete through seal. A vapor barrier as described in section 4.1.2 shall be applied to all fittings. In those instances where installatio of preformed aluminum covering is not possible or practical the insulation shall have a vapor seal applied as described in section 4.1.2.

A4.1.5.2 Valves - Shall be insulated as shown in Drawing No. 34-10. Wherever possible the valve insulat will be covered with a metal jacket as describe in section 4.1.3. The insulation shall be held to the valve body by 1/2-inch x .020-inch thick bands wherever possible.

A4.1.5.3 Flanges - Shall be insulated as shown on Drawing No. 34-11.

004713

A4.2 EQUIPMENT

A4.2.1 Equipment and Vessels - Insulation shall be applied and secured to the shell in the same manner as described for cold piping in section 4.1.1. After the insulation has been secured in place a mastic vapor barrier as described in section 4.1.2 shall be applied. After application of the vapor barrier has been completed the insulation shall be weatherproofed with aluminum jacket as described in section 4.1.3.

Chil-springs - Chil-springs (see M5.9) shall be used one for each 50 feet of banding where specified on large diameter equipment to allow for expansion/contraction.

Support Rings - Support rings shall be 1-1/2" x 3/16" carbon steel. Attach one ring 3" below bottom head tangent line and at 18-ft. intervals. On carbon steel equipment that operates above 150°F and on all corrosion resistant equipment, support rings shall be tack welded to shell (3" tack on 12" alternate centers). On carbon steel equipment that operates below 150°F, the ring shall be seal welded to the shell. Reference should be made to the fabricated equipment section for further information.

Stiffening Rings - When required, may be used as insulation support rings.

Seam Interference - Miscellaneous support rings and stiffening rings shall not be located coincident with circumferential seams. Insulation support rings shall be not more than 18 feet apart. A 1/2-inch expansion joint packed with resilient glass blanket material shall be provided under each support ring.

Insulation for Vessel Heads - Shall be applied same manner as described in section 4.1.1 for cold piping, using factory shaped discs head segments or standard flat block trimmed in the field to fit. Each layer of insulation shall be held in place with 3/4-inch wide x 0.020-inch thick type 304 stainless steel or monel metal (quarter hard) bands on a maximum of 12-inch centers. Head insulation shall be additionally secured with Nelson studs or equal 1/4-inch O.D. x 7/8-inch long with a 1/4-inch hole located 5/16 of an inch from the end of the stud. These studs shall be spaced on 12-inch centers around the head. After the insulation has been secured a vapor barrier as described in section 4.1.2 shall be applied. After the application of the vapor barrier has been completed a weatherproofed metal jacket as described in section 4.1.3 shall be applied.

Contraction joints shall be provided on vessels in the manner as described for cold piping.

Where nozzles, structural steel supports and other connections extend outward from the shell of a vessel or exchanger they shall be insulated as shown on Drawing No. 34-6. Insulation shall be extended outward along the projecting item a minimum distance of four times the insulation thickness beyond the outer surface of the insulation on the shell.

All vessel supports or saddles shall be insulated as shown on Drawing No. 34-5 with the same thickness as the vessel shell and the insulation shall be carried down the member four times the insulation thickness, but in no case less than 12 inches.

Cold insulation will be required on bottom heads of vertical vessels. Vessel skirts shall be insulated inside and outside a minimum distance of one foot as shown on Drawing No. 34-7.

Insulation for vessel manholes shall be as shown on Drawing No. 34-4.

A4.3 PERSONNEL PROTECTION

In order to reduce frostbite (freeze burn) hazards for operating personnel, exposed low temperature piping and equipment operating below 20°F shall be either insulated or shielded by expanded metal rigidly supported by spacers, if the surfaces are within a distance of seven feet above finished grade or adjacent to an elevated platform.

Insulation thickness and type shall be as specified in Table 6, +70°F to 0°F column.

A4.4 COLD INSULATION DRAWINGS

34-1 Cold Pipe Hanger Insulation
34-2 Cold Pipe Anchor Insulation
34-3 Cold Vertical Equipment Insulation
34-4 Cold Vessel Insulation Removable Manhole Cover
34-5 Cold Horizontal Equipment Insulation Cradle
34-6 Cold Equipment Structural Steel Support
34-7 Cold Equipment Skirt and Bottom Insulation
34-8 Cold Insulation Pipe Hangers and Supports
34-9 Cold Insulation Horizontal Contraction Joints
34-10 Cold Valve Insulation
34-11 Cold Piping Insulation Support and Flange Cover
34-12 Miscellaneous Cold Insulation Details
34-13 Cold Insulation of Mechanical Expansion Joints

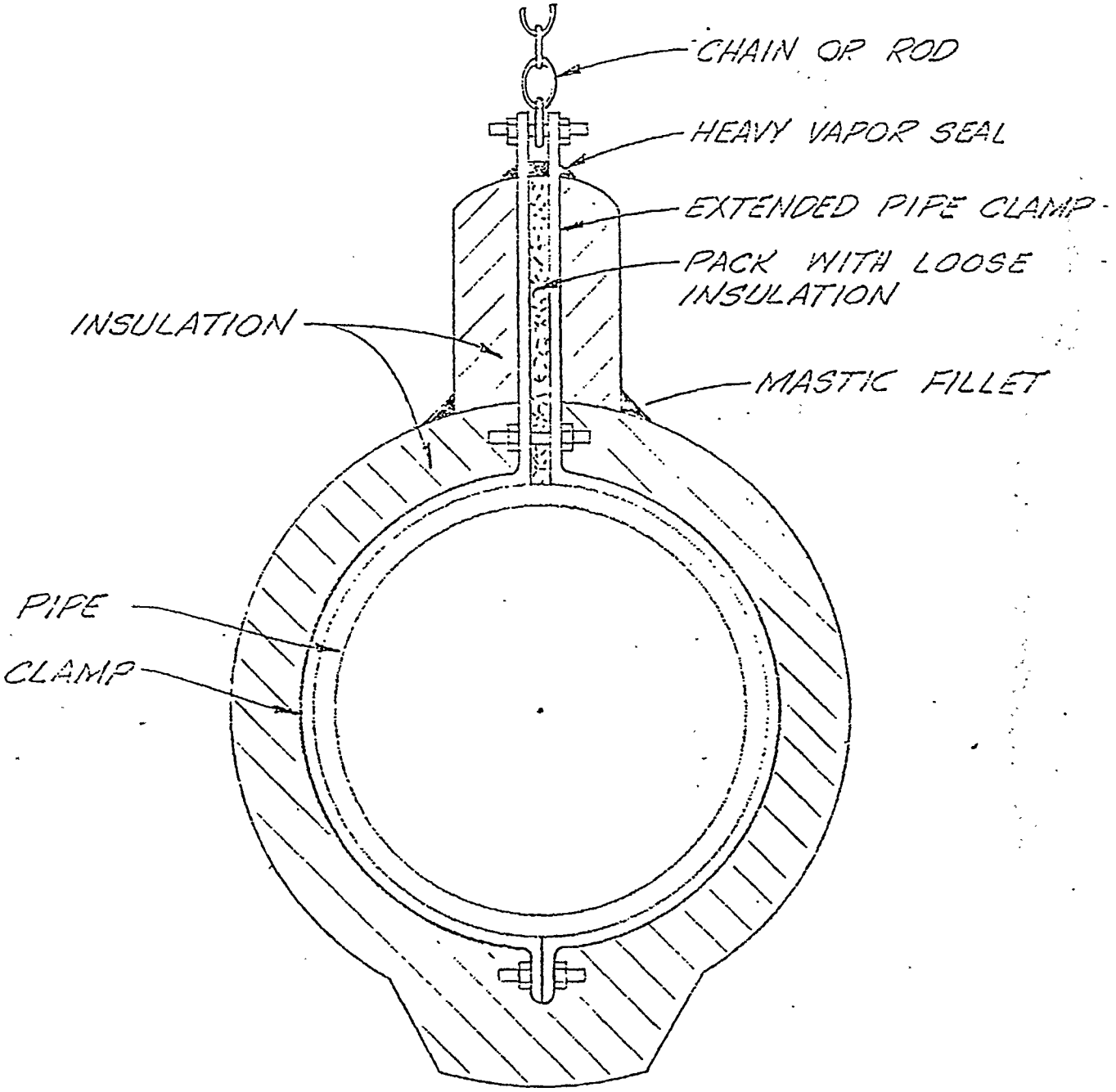

004717

CELANESE CHEMICAL COMPANY
A DIVISION OF CELANESE CORPORATION
CLEAR LAKE PLANT — ENGINEERING DEPT

COLD PIPE HANGER INSULATION

DR.	DATE	SCALE	DRAWING NO.

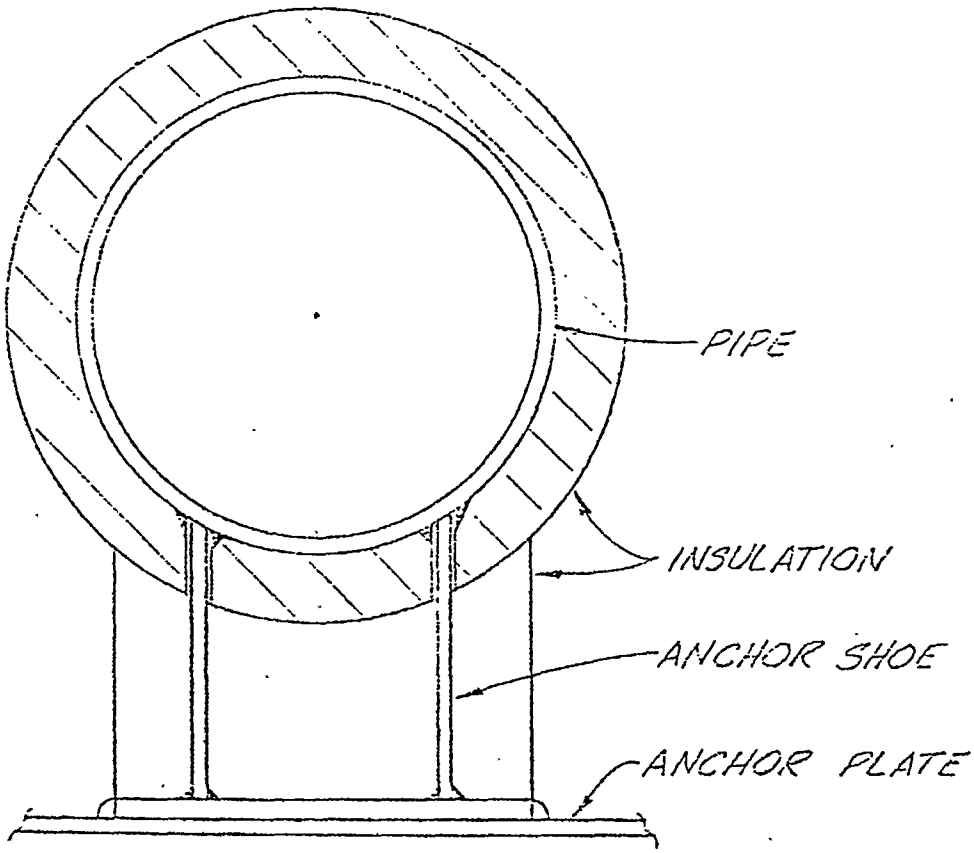

004718

CELANESE CHEMICAL COMPANY
A DIVISION OF CELANESE CORPORATION
CLEAR LAKE PLANT — ENGINEERING DEPT.

COLD PIPE ANCHOR INSULATION

DR.	DATE	SCALE	DRAWING NO.
APP.	DATE		34-2

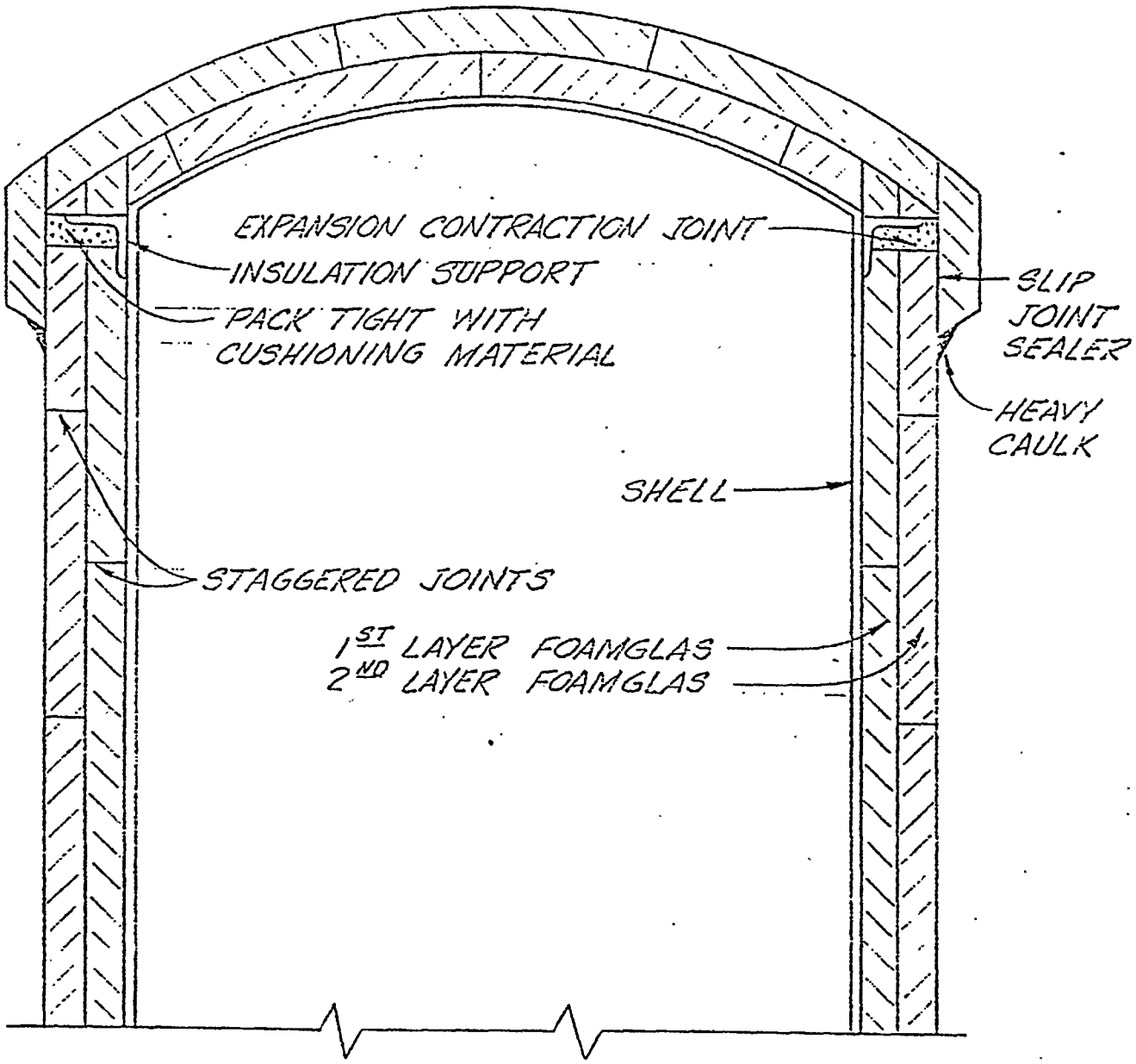

004719

CELANESE CHEMICAL COMPANY
A DIVISION OF CELANESE CORPORATION
CLEAR LAKE PLANT
ENGINEERING DEPT

COLD VERTICAL EQUIPMENT INSULATION

DR.	DATE	SCALE	DRAWING NO.
			24-2

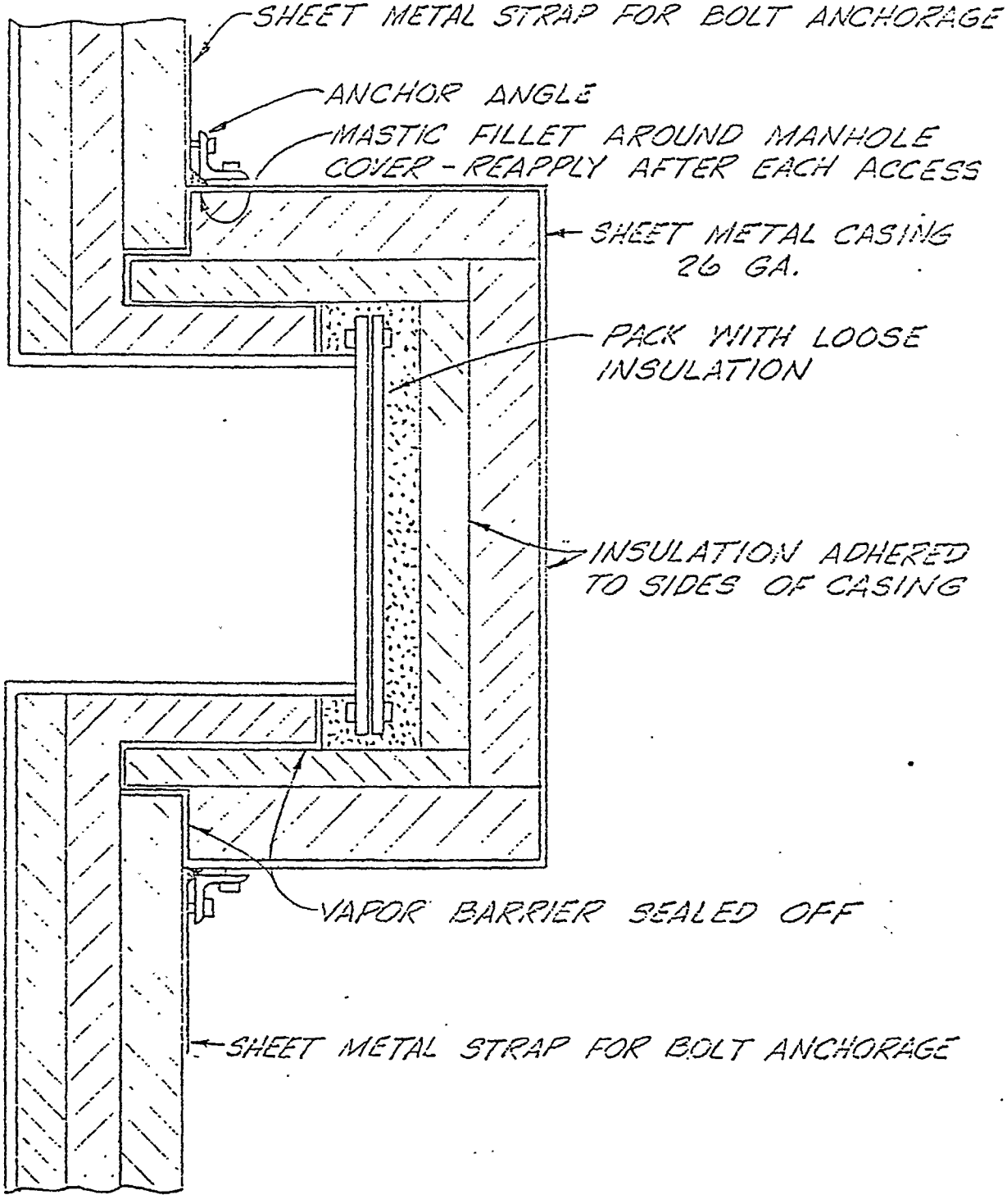

004720

CELANESE CHEMICAL COMPANY
A DIVISION OF CELANESE CORPORATION
CLEAR LAKE PLANT — ENGINEERING DEPT

COLD VESSEL INSULATION REMOVABLE MANHOLE COVER

DR.	DATE	SCALE	DRAWING NO.
APP.	DATE		34-4

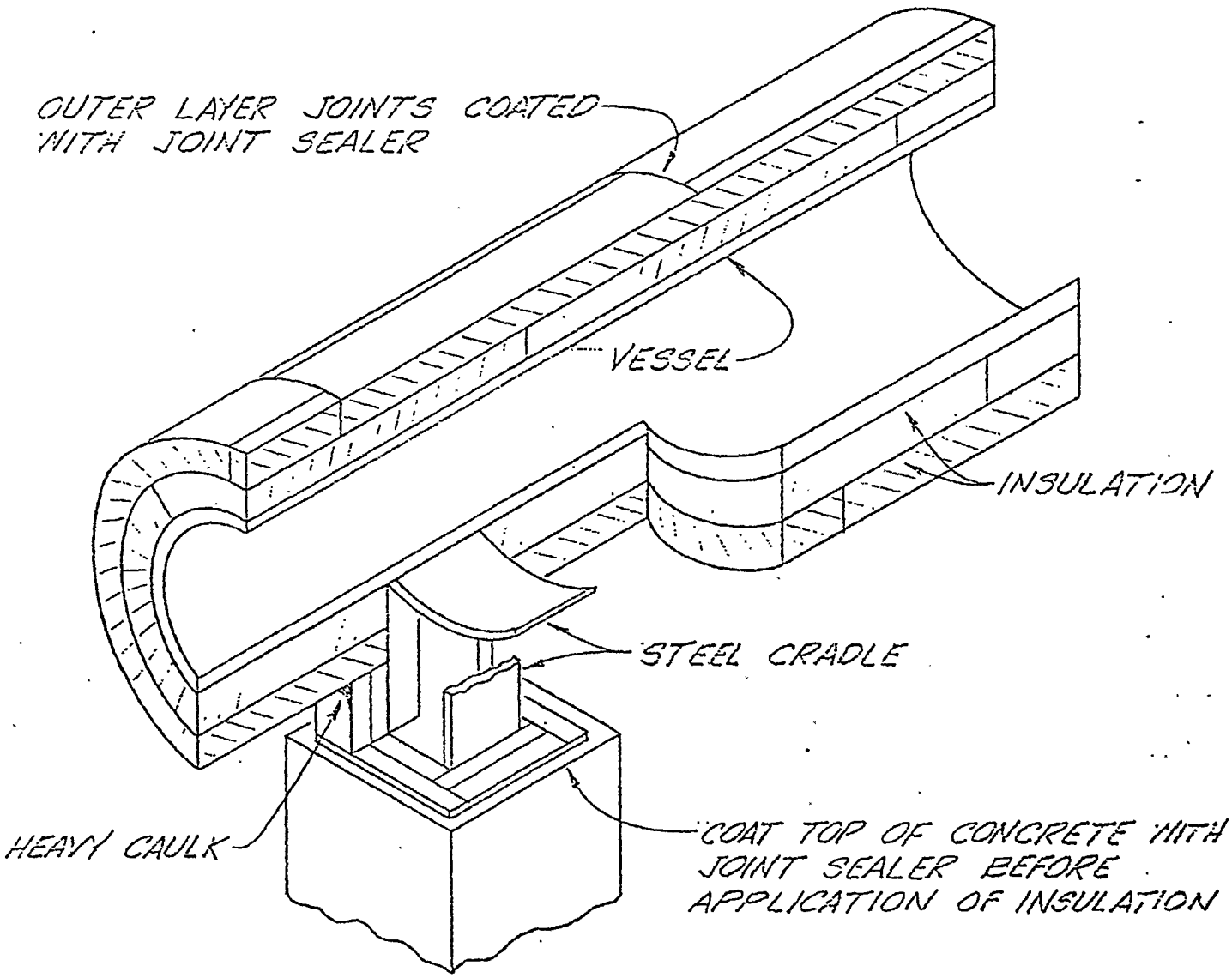

004721

CELANESE CHEMICAL COMPANY
A DIVISION OF CELANESE CORPORATION
CLEAR LAKE PLANT — ENGINEERING DEPT.

COLD HORIZ. EQUIP.
INSULATION - CRADLE

DR.	DATE	SCALE	DRAWING NO.
APP			34-5

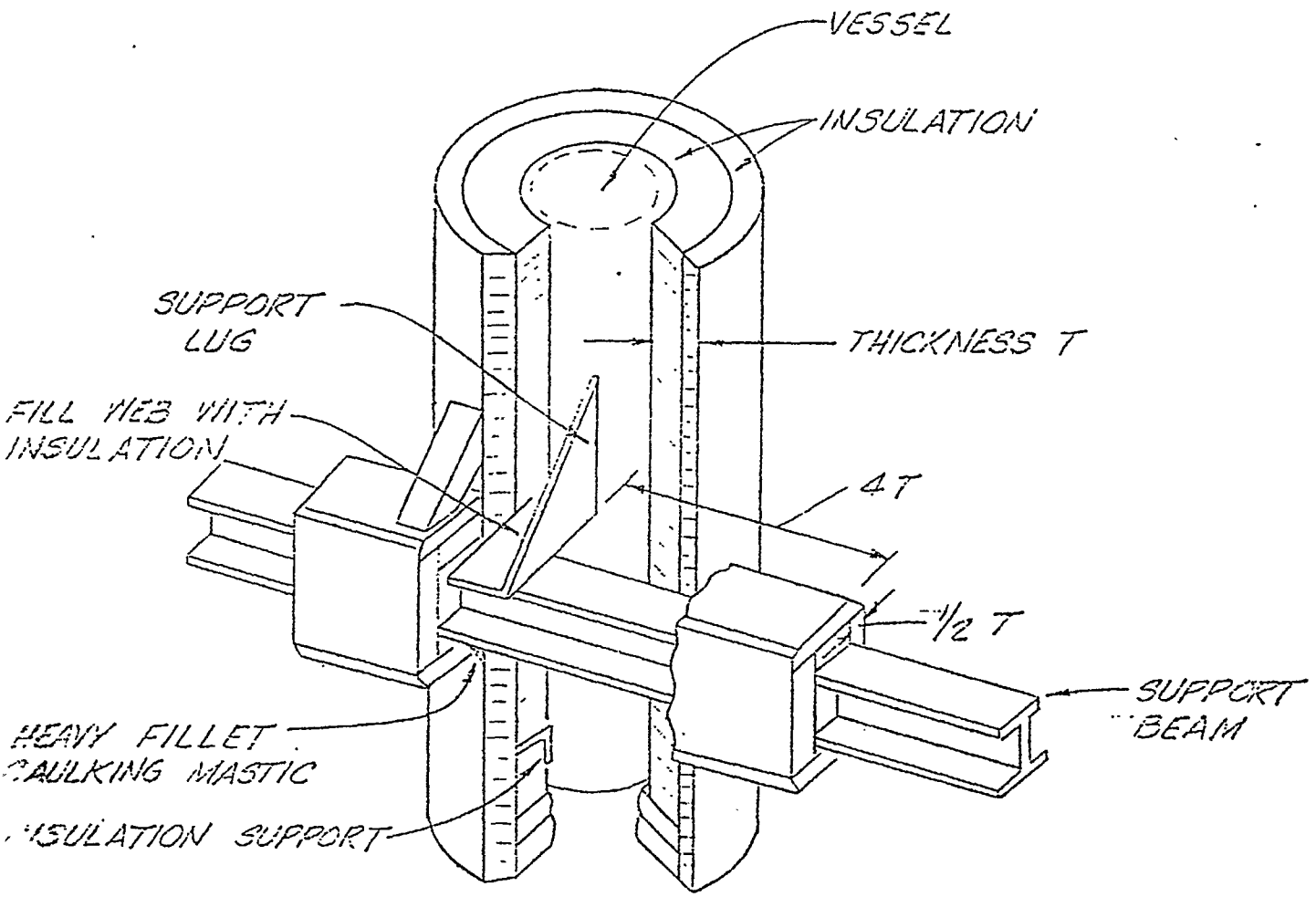

004722

CELANESE CHEMICAL COMPANY
A DIVISION OF CELANESE CORPORATION
CLEAR LAKE PLANT — ENGINEERING DEPT.

COLD EQUIP. STRUCTURAL STEEL SUPPORT

DR.	DATE	SCALE	DRAWING NO.
APP.	DATE		34-6

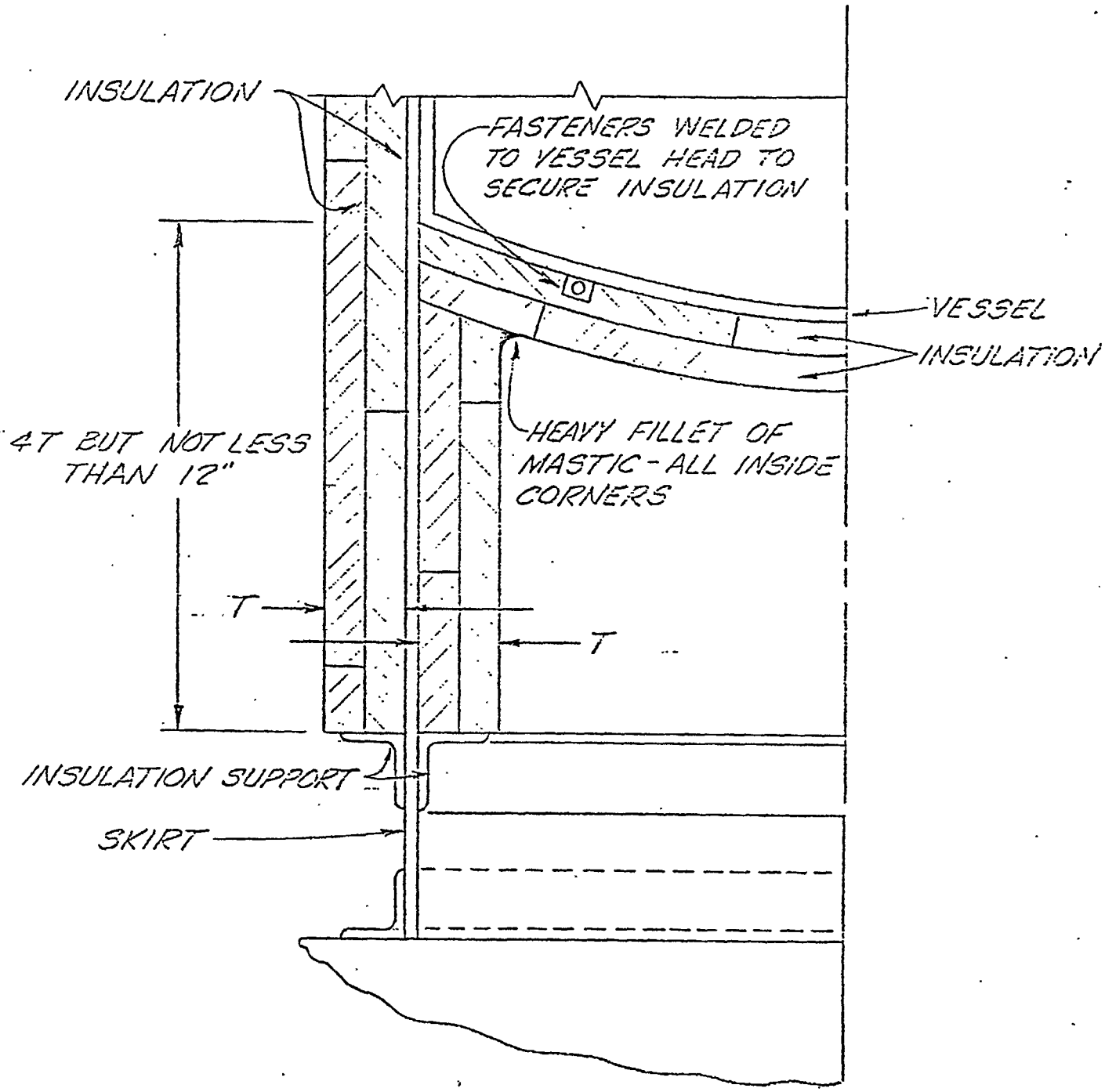

004723

CELANESE CHEMICAL COMPANY
A DIVISION OF CELANESE CORPORATION
CLEAR LAKE PLANT
ENGINEERING DEPT

COLD EQUIP. SKIRT & BOTTOM INSULATION

DR.	DATE	SCALE	DRAWING NO.
APP.	DATE		34-7

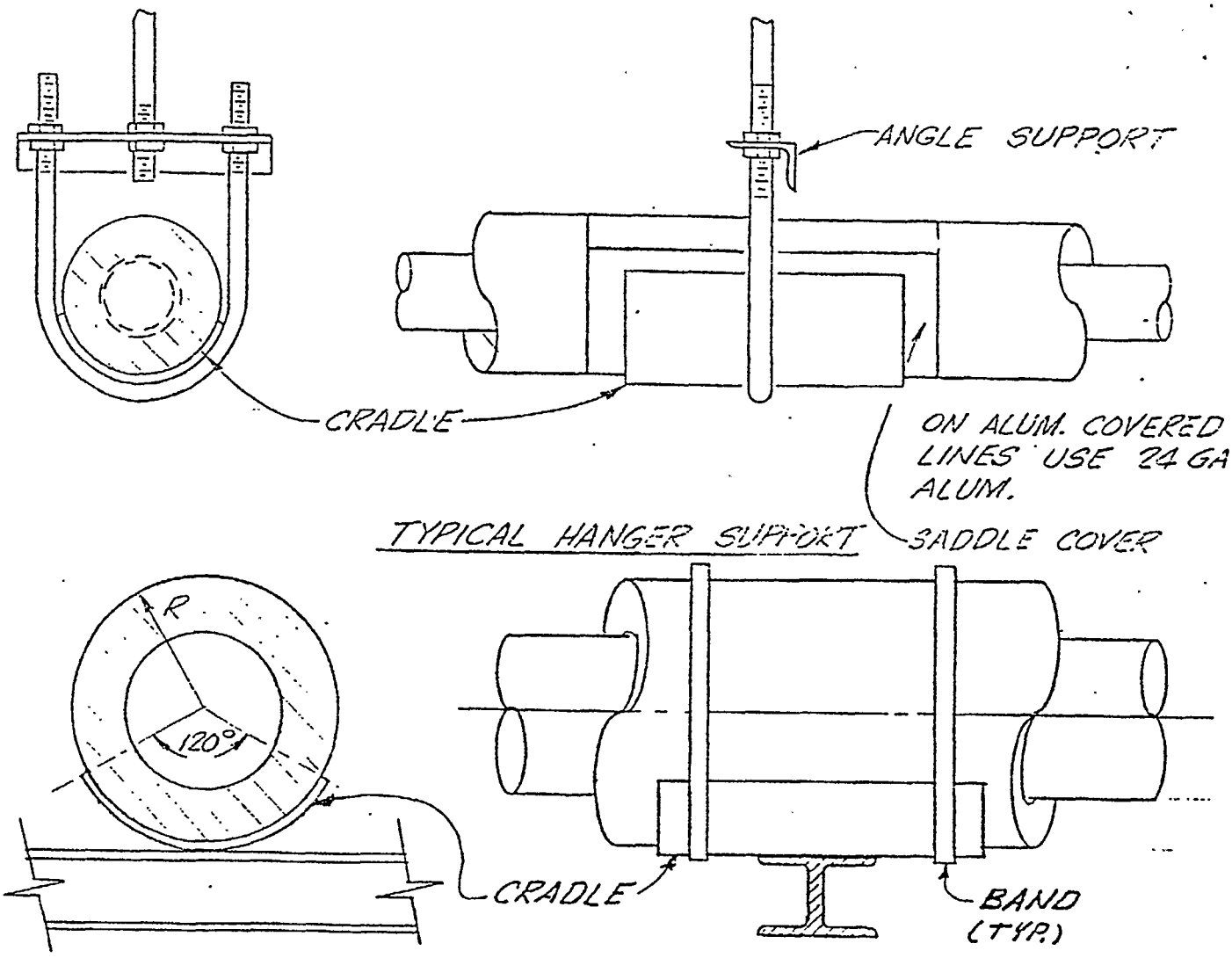

TYPICAL SADDLE SUPPORT

SEE DWG. NO. 34-8A FOR CONSTRUCTION DETAILS

004724

CELANESE CHEMICAL COMPANY
A DIVISION OF CELANESE CORPORATION

CLEAR LAKE PLANT — ENGINEERING

COLD INSULATION-PI. HANGERS & SUPPORTS

DR.	DATE	SCALE	DRAWING NO
APP.	DATE		34-8

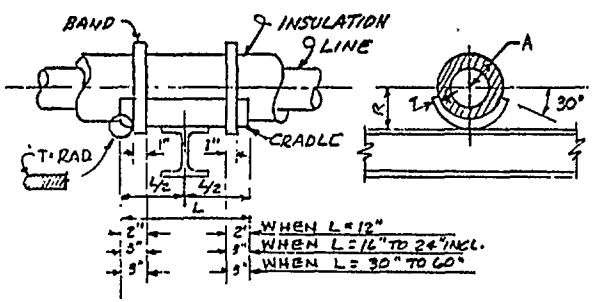

GENERAL NOTES

1. CRADLES SHALL BE CARBON STEEL.
2. CRADLES SHALL BE PLACED ON THE OUTSIDE OF THE INSULATION WEATHER PROOFING.
3. WIRE USED TO BAND THE INSULATION AROUND THE PIPE IN THE CRADLE AREA, SHALL BE INSTALLED FLUSH WITH O.D. OF INSULATION.
4. ALL SPACE BETWEEN THE BOTTOM OF CRADLE AND PIPE SUPPORT SHALL BE FILLED WITH SUITABLE SHIM WELDED TO PIPE SUPPORT
5. BAND 20GA, S/S MACHINE TIGHTENED & FURNISHED BY INSULATION VENDOR.
6. LAPS ON INSULATION WEATHER PROOFING SHALL NOT BE LOCATED BETWEEN CRADLE AND INSULATION.
7. A MOLDED POLYURETHANE SUPPORT MAY BE USED INSTEAD OF CRADLE.

NOM. PIPE SIZE	L - LENGTH					
	10' SPAN	12' SPAN	15' SPAN	18' SPAN	20' SPAN	30' SPAN
¾"	12"	-	-	-	-	-
1"	12"	12"	-	-	-	-
1½"	12"	12"	-	-	-	-
2"	12"	12"	-	-	-	-
3"	12"	12"	12"	-	-	-
4"	12"	12"	12"	12"	-	-
6"	12"	12"	16"	16"	20"	20"
8"	12"	12"	16"	16"	20"	20"
10"	12"	16"	20"	24"	24"	24"
12"	12"	16"	20"	24"	24"	24"
14"	16"	20"	24"	30"	30"	30"
16"	16"	20"	24"	30"	30"	30"
18"	20"	24"	30"	36"	36"	36"
20"	20"	24"	30"	36"	36"	36"
24"	24"	30"	36"	42"	42"	42"
30"	30"	36"	42"	48"	54"	54"
36"	36"	42"	48"	54"	60"	60"

NOMINAL INSULATION THICKNESS

NOM. PIPE SIZE	OUTSIDE DIA.	1" A	1" T	1" R	1½" A	1½" T	1½" R	2" A	2" T	2" R	2½" A	2½" T	2½" R	3" A	3" T	3" R	3½" A	3½" T	3½" R	4" A	4" T	4" R	4½" A	4½" T	4½" R	5" A	5" T	5" R	5½" A	5½" T	5½" R	6" A	6" T	6" R	6½" A	6½" T	6½" R	7" A	7" T	7" R	8" A	8" T	8" R	8½" A	8½" T	8½" R
¾"	1.050"	1.72"	14 GA	1½"	2"	14 GA	2.72"	2.72"	14 GA	2.72"	2.72"	1"	2.72"	3.72"	1/8"	3.72"	4.72"	1/8"	4.72"	4.72"	1/8"	4.72"	5.72"	1/8"	5.72"	5.72"	1/8"	5.72"																			
1"	1.315"	1.72"	14 GA	1.72"	2.72"	14 GA	2.72"	2.72"	14 GA	2.72"	3.72"	1"	3.72"	3.72"	1/8"	3.72"	4.72"	1/8"	4.72"	4.72"	1/8"	4.72"	5.72"	1/8"	5.72"	5.72"	1/8"	5.72"	6.72"	1"	7.72"															
1¼"	1.660"	2"	14 GA	2.72"	2.72"	14 GA	2.72"	2.72"	14 GA	2.72"	3.72"	1"	3.72"	3.72"	1/8"	3.72"	4.72"	1/8"	4.72"	4.72"	1/8"	4.72"	5.72"	1/8"	5.72"	5.72"	1/8"	5.72"	6.72"	1"	7.72"															
2"	2.375"	1.72"	2.72"	2.72"	2.72"	1.72"	2.72"	3.72"	1"	3.72"	3.72"	1/8"	3.72"	4.72"	1/8"	4.72"	5"	1/8"	5.72"	5.72"	1/8"	5.72"	6.72"	1/8"	6.72"	6.72"	1/8"	6.72"	7"	1/4"	7.72"	7.72"	1/4"	7.72"	8"	1/4"	8.72"									
3"	3.500"	2.72"	1/8"	2.72"	3.72"	1/8"	3.72"	3.72"	1/8"	3.72"	4.72"	1/8"	4.72"	4.72"	1/8"	4.72"	5.72"	1/8"	5.72"	5.72"	1/8"	5.72"	6.72"	1/8"	6.72"	6.72"	1/8"	6.72"	7"	3/16"	7.72"	7.72"	1/4"	7.72"	8"	1/4"	8.72"	8.72"	1/4"	8.72"	9"	1/4"	9.72"	9.72"	1/4"	9.72"
4"	4.500"	3.72"	1/8"	3.72"	4.72"	1/8"	4.72"	4.72"	1/8"	4.72"	5.72"	1/8"	5.72"	5.72"	1/8"	5.72"	6.72"	1/8"	6.72"	6.72"	1/8"	6.72"	7"	3/16"	7.72"	7.72"	1/4"	7.72"	8"	1/4"	8.72"	8.72"	1/4"	8.72"	9"	1/4"	9.72"	9.72"	1/4"	9.72"	10"	1/4"	10.72"	10.72"	1/4"	10.72"
6"	6.625"	4.72"	1/8"	4.72"	5"	1/8"	5.72"	5.72"	1/8"	5.72"	6.72"	1/8"	6.72"	6.72"	1/8"	6.72"	7"	1/4"	7.72"	7.72"	1/4"	7.72"	8"	1/4"	8.72"	8.72"	1/4"	8.72"	9"	1/4"	9.72"	9.72"	1/4"	9.72"	10"	1/4"	10.72"	10.72"	1/4"	10.72"	11"	1/4"	11.72"	11.72"	1/4"	11.72"
8"	8.625"	5.72"	1/8"	5.72"	6.72"	1/8"	6.72"	6.72"	1/8"	6.72"	7"	1/8"	7.72"	7.72"	1/8"	7.72"	8"	1/4"	8.72"	8.72"	1/4"	8.72"	9"	1/4"	9.72"	9.72"	1/4"	9.72"	10"	1/4"	10.72"	10.72"	1/4"	10.72"	11"	1/4"	11.72"	11.72"	1/4"	11.72"	12"	1/4"	12.72"	12.72"	1/4"	12.72"
10"	10.750"	7"	1/4"	7.72"	7.72"	1/4"	7.72"	8"	1/4"	8.72"	8.72"	1/4"	8.72"	9"	1/4"	9.72"	9.72"	1/4"	9.72"	10"	1/4"	10.72"	10.72"	1/4"	10.72"	11"	1/4"	11.72"	11.72"	1/4"	11.72"	12"	1/4"	12.72"	12"	1/4"	12.72"	12.72"	1/4"	12.72"	13"	1/4"	13.72"	13.72"	1/4"	13.72"
12"	12.750"	8"	1/4"	8.72"	8.72"	1/4"	8.72"	9"	1/4"	9.72"	9.72"	1/4"	9.72"	10"	1/4"	10.72"	10.72"	1/4"	10.72"	11"	1/4"	11.72"	11.72"	1/4"	11.72"	12"	1/4"	12.72"	12.72"	1/4"	12.72"	13"	1/4"	13.72"	13"	1/4"	13.72"	13.72"	1/4"	13.72"	14"	1/4"	14.72"	14.72"	1/4"	14.72"
14"	14.000"	8½"	5/16"	8.72"	9"	5/16"	9.72"	9.72"	5/16"	9.72"	10"	5/16"	10.72"	10.72"	5/16"	10.72"	11"	5/16"	11.72"	11.72"	5/16"	11.72"	12"	5/16"	12.72"	12.72"	5/16"	12.72"	13"	5/16"	13.72"	13.72"	5/16"	13.72"	14"	5/16"	14.72"	14.72"	5/16"	14.72"	15"	5/16"	15.72"	15.72"	5/16"	15.72"
16"	16.000"	9½"	5/16"	9.72"	10"	5/16"	10.72"	10.72"	5/16"	10.72"	11"	5/16"	11.72"	11.72"	5/16"	11.72"	12"	5/16"	12.72"	12.72"	5/16"	12.72"	13"	5/16"	13.72"	13.72"	5/16"	13.72"	14"	5/16"	14.72"	14.72"	5/16"	14.72"	15"	5/16"	15.72"	15.72"	5/16"	15.72"	16"	5/16"	16.72"	16.72"	5/16"	16.72"
18"	18.000"	10½"	3/8"	10.72"	11"	3/8"	11.72"	11.72"	3/8"	11.72"	12"	3/8"	12.72"	12.72"	3/8"	12.72"	13"	3/8"	13.72"	13.72"	3/8"	13.72"	14"	3/8"	14.72"	14.72"	3/8"	14.72"	15"	3/8"	15.72"	15.72"	3/8"	15.72"	16"	3/8"	16.72"	16.72"	3/8"	16.72"	17"	3/8"	17.72"	17.72"	3/8"	17.72"
20"	20.000"	11½"	3/8"	11.72"	12"	3/8"	12.72"	12.72"	3/8"	12.72"	13"	3/8"	13.72"	13.72"	3/8"	13.72"	14"	3/8"	14.72"	14.72"	3/8"	14.72"	15"	3/8"	15.72"	15.72"	7/16"	15.72"	16"	7/16"	16.72"	16.72"	7/16"	16.72"	17"	7/16"	17.72"	17.72"	7/16"	17.72"	18"	7/16"	18.72"	18.72"	7/16"	18.72"
24"	24.000"	13½"	3/8"	13.72"	14"	3/8"	14.72"	14.72"	3/8"	14.72"	15"	3/8"	15.72"	15.72"	7/16"	15.72"	16"	7/16"	16.72"	16.72"	7/16"	16.72"	17"	7/16"	17.72"	17.72"	7/16"	17.72"	18"	7/16"	18.72"	18.72"	7/16"	18.72"	19"	7/16"	19.72"	19.72"	7/16"	19.72"	20"	7/16"	20.72"	20.72"	7/16"	20.72"
30"	30.000"	16½"	1/2"	17"	17"	1/2"	17.72"	17.72"	1/2"	18"	18"	1/2"	18.72"	18.72"	1/2"	19"	19"	1/2"	19.72"	19.72"	1/2"	20"	20"	1/2"	20.72"	20.72"	5/8"	21.72"	21"	5/8"	21.72"	21.72"	5/8"	22.72"	22"	5/8"	22.72"	22.72"	5/8"	23.72"	23"	5/8"	23.72"	23.72"	5/8"	24.72"
36"	36.000"	19½"	5/8"	20.72"	20"	5/8"	20.72"	20.72"	5/8"	21.72"	21"	5/8"	21.72"	21.72"	5/8"	22.72"	22"	5/8"	22.72"	22.72"	5/8"	23.72"	23"	5/8"	23.72"	23.72"	5/8"	24.72"	24"	5/8"	24.72"															

COLD INSULATION CRADLE DETAIL

004725

DRAWING No. 34-8A

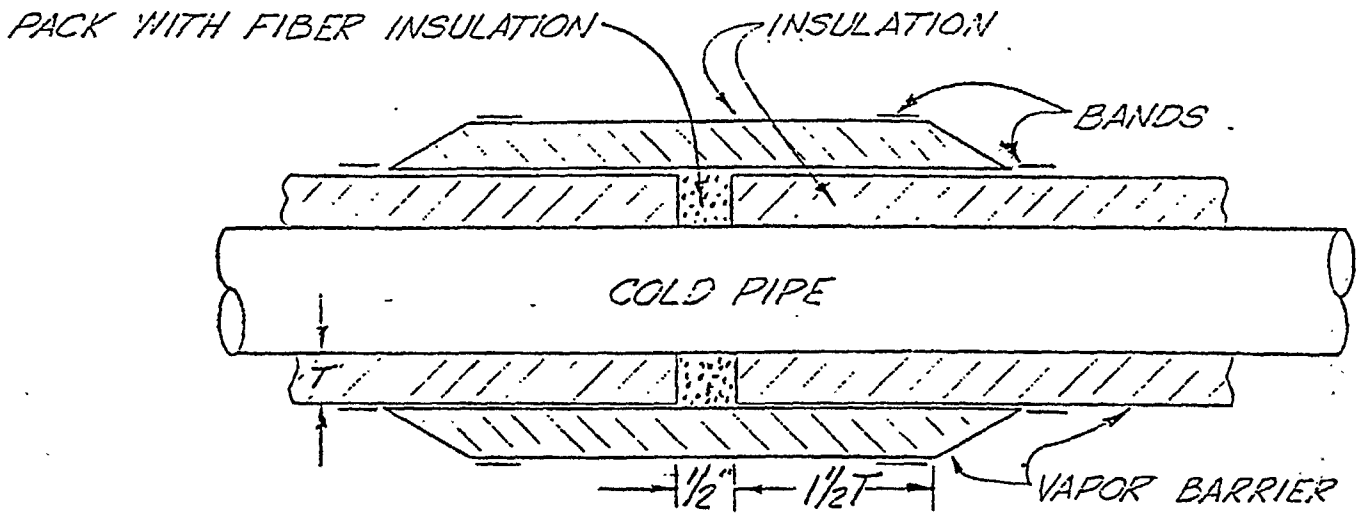

SINGLE LAYER INSULATION

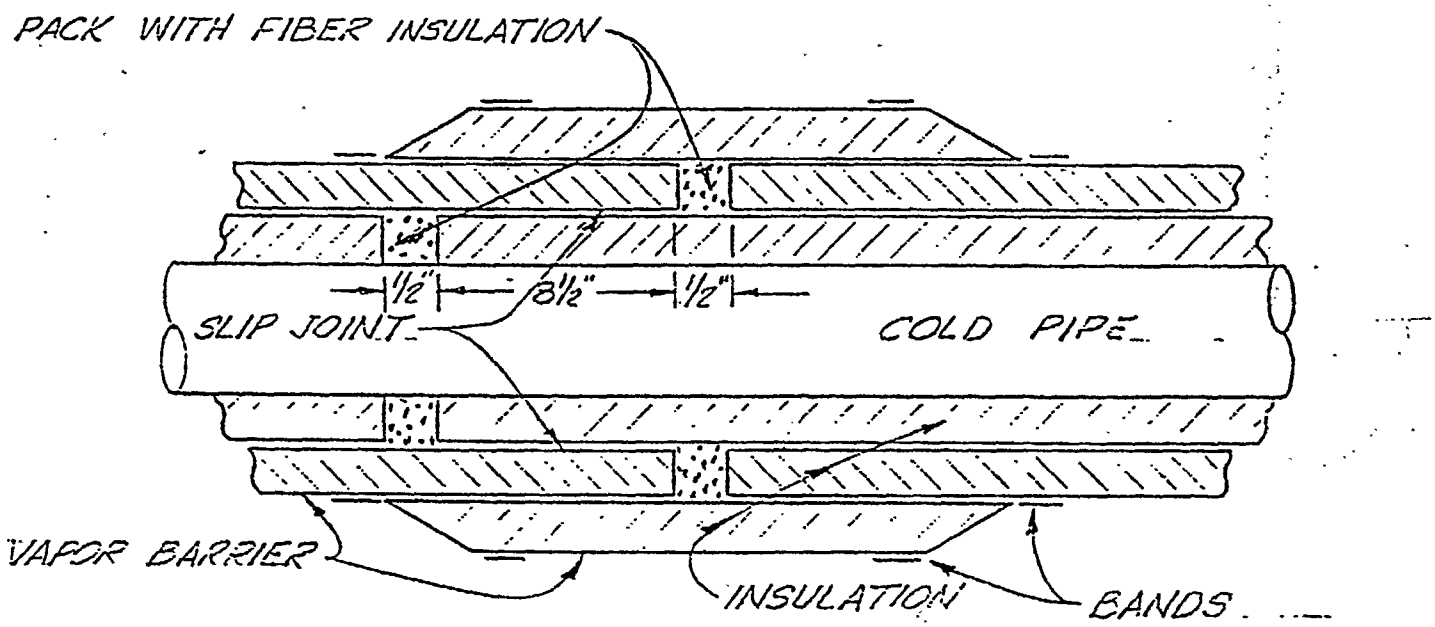

DOUBLE LAYER INSULATION

004726

CELANESE CHEMICAL COMPANY
A DIVISION OF CELANESE CORPORATION
CLEAR LAKE PLANT
ENGINEERING DEPT.

COLD INSULATION HORIZ. CONTRACTION JOINTS

DR.	DATE	SCALE	DRAWING NO.

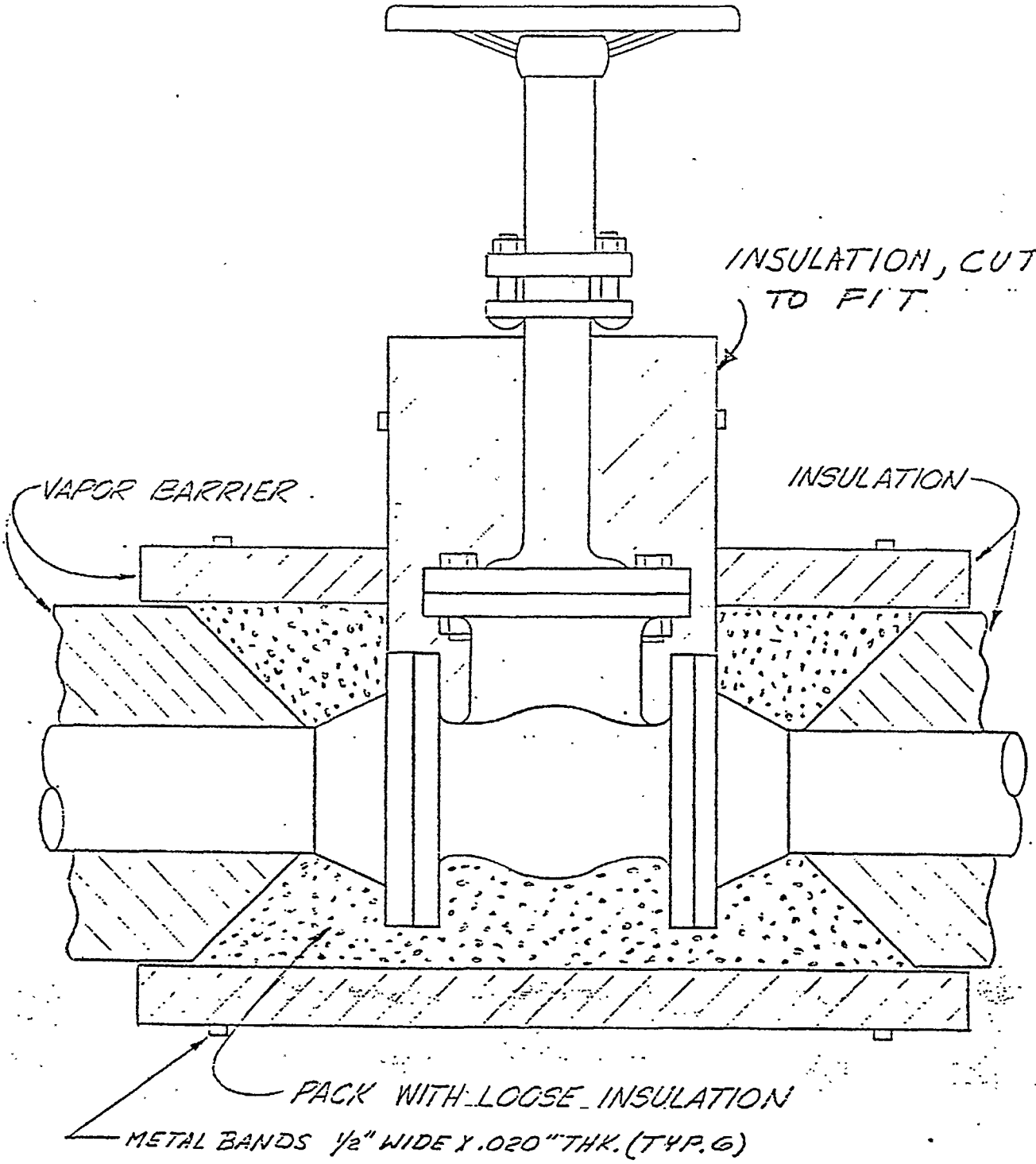

004727

CELANESE CHEMICAL COMPANY
A DIVISION OF CELANESE CORPORATION
CLEAR LAKE PLANT — ENGINEERING DEPT

COLD VALVE INSULATION

DR.	DATE	SCALE	DRAWING NO.
APP.	DATE		34-10.

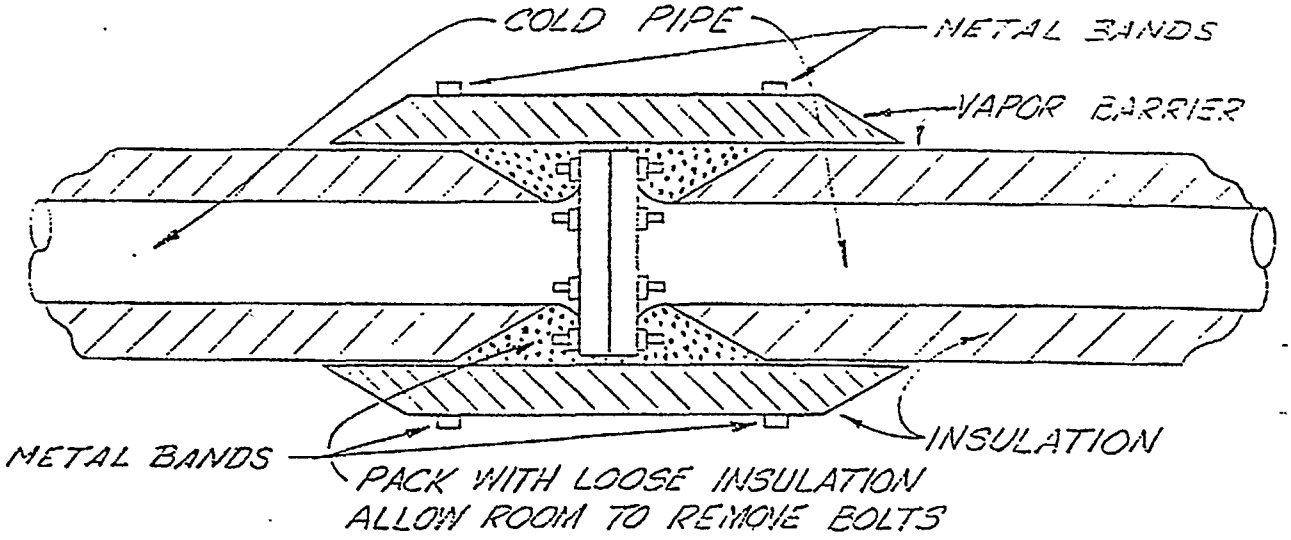

FLANGED JOINT

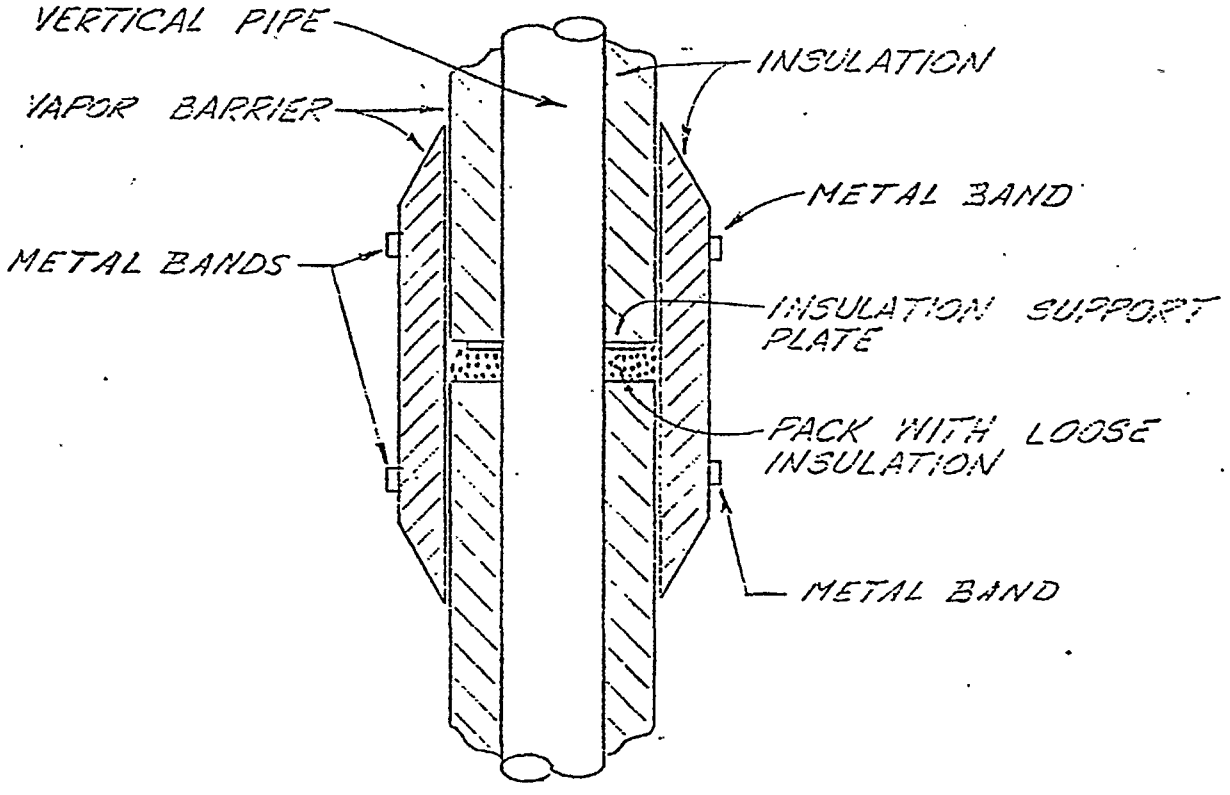

004728

VERTICAL PIPING

CELANESE CHEMICAL COMPANY
A DIVISION OF CELANESE CORPORATION
CLEAR LAKE PLANT — ENGINEERING DEPT

COLD PIPING INSULATION SUPPORT & FLANGE COVER

DR.	DATE	SCALE	DRAWING NO.

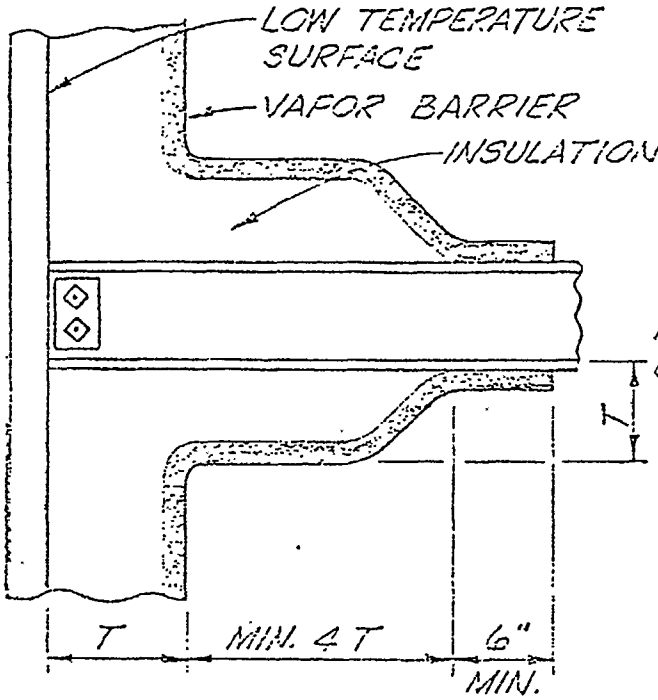

LUGS AND SUPPORTS

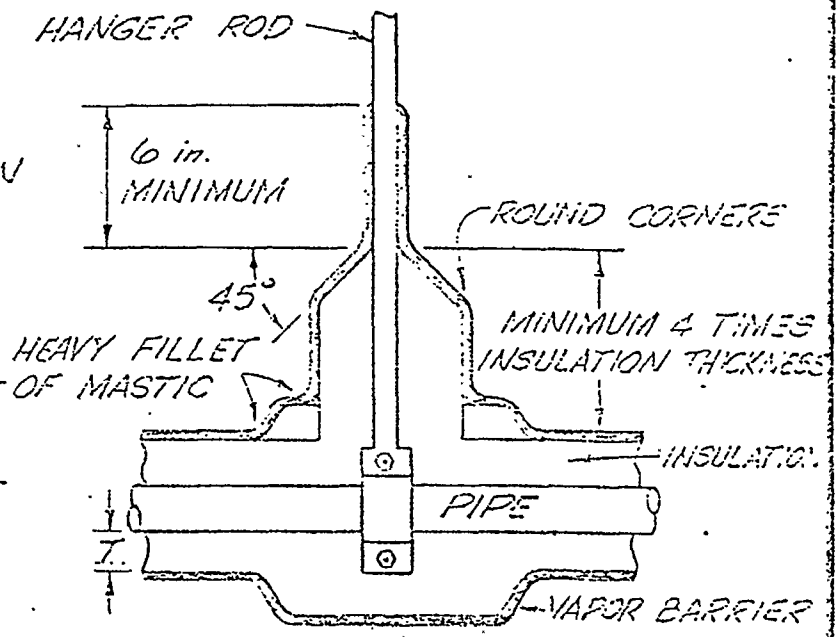

PIPE HANGERS

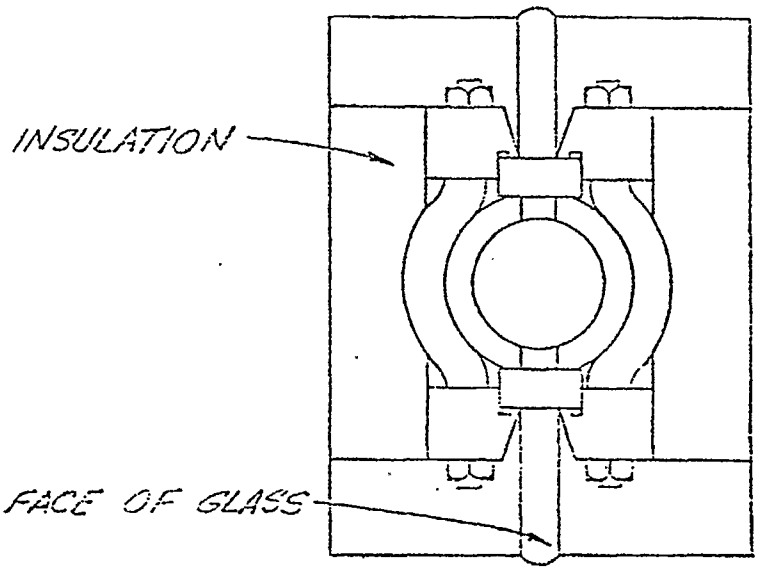

GAGE GLASS

004729

SHELL CHEMICAL COMPANY
A DIVISION OF SHELL OIL COMPANY
CLEAR LAKE PLANT — ENGINEERING DEPT.

MISC. COLD INSULATION DETAILS

DR.	DATE	SCALE	DRAWING NO.
APP.	DATE		34-12

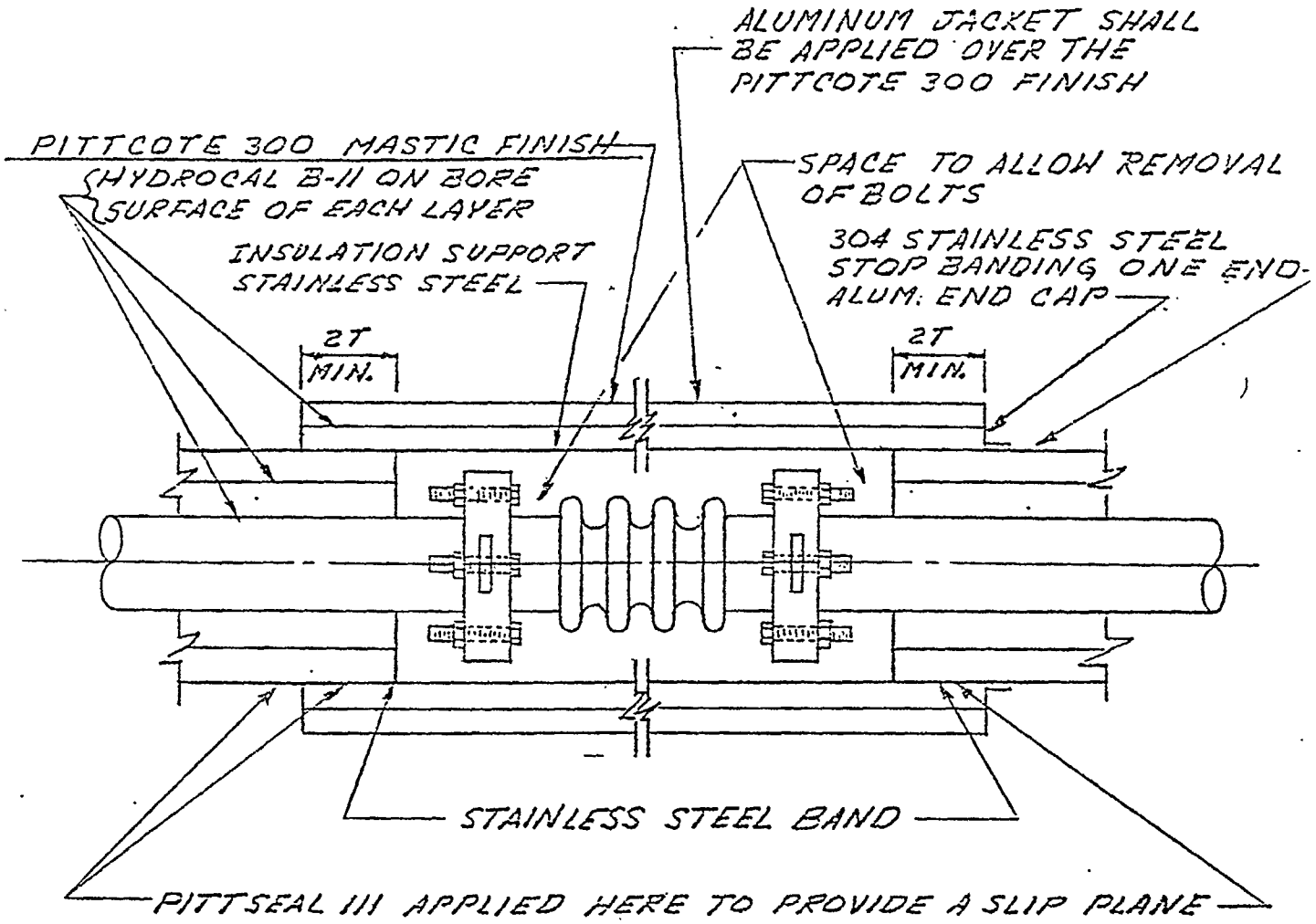

MECHANICAL EXPANSION - CONTRACTION JOINT

004730

CELANESE CHEMICAL COMPANY
A DIVISION OF CELANESE CORPORATION
CLEAR LAKE PLANT — ENGINEERING DEPT.

MECHANICAL EXPANSION CONTRACTION JOINT

DR. J. GARCIA	DATE 11-15-76	SCALE	DRAWING NO. 71-12

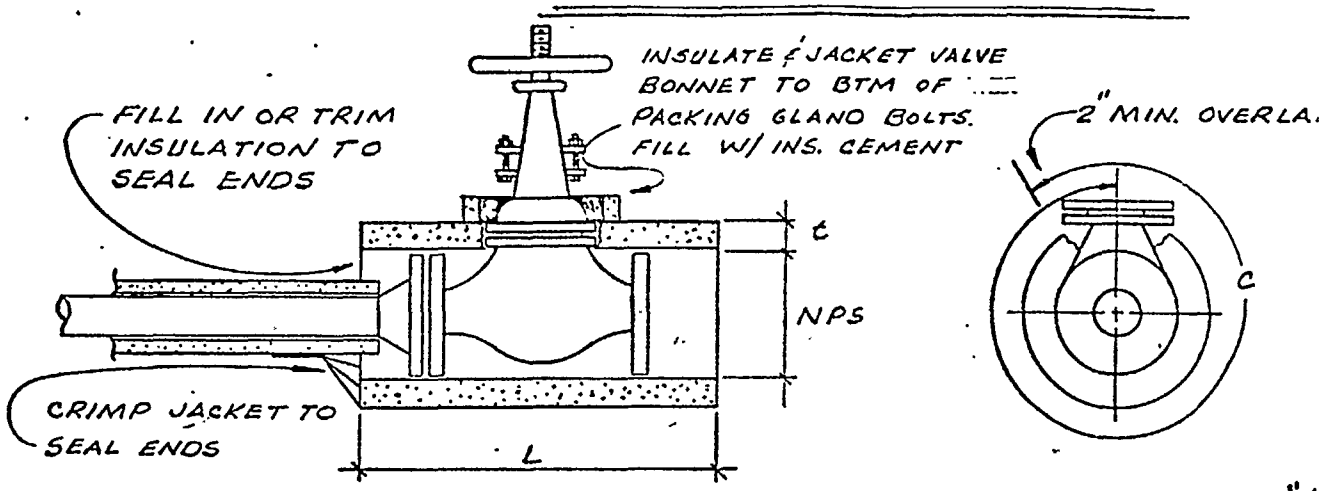

METAL JACKET LENGTH "C"

VALVE SIZE	VALVE RATING	INSULATION REQUIRED t	NPS	L	TYPE	JACKET SIZE 36"WO.x"C"
3"	150#	2½"	8"	18"	FIBERGLASS	48"
4"	150#	2½"	10"	18"	FIBERGLASS	55"
6"	150#	2½"	12"	22"	FIBERGLASS	60"
8"	150#	2½"	14"	24"	FIBERGLASS	64"
10"	150#	2½"	16"	26"	FIBERGLASS	72"
12"	150#	2½"	20"	28"	FIBERGLASS	83"
14"	150#	2½"	22"	28"	FIBERGLASS	90"
16"	150#	2½"	24"	28"	FIBERGLASS	96"
18"	150#	2½"	26"	30"	FIBERGLASS	102"
20"	150#	2½"	28"	30"	FIBERGLASS	108"
3"	300#	3"	8"	18"	CALCIUM SILICATE	48"
4"	300#	3"	10"	18"	CALCIUM SILICATE	55"
6"	300#	3"	12"	24"	CALCIUM SILICATE	64"
8"	300#	3"	16"	24"	CALCIUM SILICATE	72"
10"	300#	3"+1½"	18"	26"	CAL. SIL. + FIBER.	88"
12"	300#	3"+1½"	22"	28"	CAL. SIL. + FIBER.	104"
14"	300#	3"+1½"	24"	36"	CAL. SIL. + FIBER.	108"
16"	300#	3"+1½"	26"	36"	CAL. SIL. + FIBER.	114"
18"	300#	3"+1½"	28"	36"	CAL. SIL. + FIBER.	120"
20"	300#	3"+1½"	30"	36"	CAL. SIL. + FIBER.	128"
3"	600#	3"	8"	21"	CALCIUM SILICATE	48"
4"	600#	3"	10"	24"	CALCIUM SILICATE	55"
6"	600#	3"+1½"	14"	30"	CAL SIL. + FIBER.	76"
8"	600#	3"+1½"	18"	34"	CAL. SIL. + FIBER.	88"
10"	600#	3"+1½"	20"	36"	CAL. SIL. + FIBER.	96"
12"	600#	3"+2"	22"	36"	CAL. SIL. + FIBER.	104"
14"	600#	3"+2"	24"	36"	CAL. SIL. + FIBER.	108"
16"	600#	3"+2"	28"	53"	CAL. SIL. + FIBER.	125"
18"	600#	3"+2"	30"	56"	CAL. SIL. + FIBER.	130"
20"	600#	3"+2"	32"	60"	CAL. SIL. + FIBER.	136"

CELANESE CORP. OF AMERICA
BAY CITY ENGINEERING DEPT.

STEAM VALVE INSULATION

DR. DENNIS DATE 2/11
APP. PWR DATE 2/11
SCALE NJ
DRAWING NO. 34-14

004731

TABLE S-I

MINIMUM PROCESS TEMPERATURE
FOR WHICH FLANGES MAY BE ECONOMICALLY INSULATED

Inches Flange Size	N=1	2	3	6	12	Fuel $/MM BTU
3	350	350	450	650	750	2.00
6	250	350	350	450	650	
12	250	250	250	450	550	
3	250	350	350	550	550	3.00
6	250	250	350	350	550	
12	250	250	250	350	450	
3	250	250	350	450	450	4.00
6	250	250	250	350	450	
12	250	250	250	250	350	
3	250	250	250	450	450	5.00
6	250	250	250	250	450	
12	250	250	250	250	350	

N=Number of times insulation is removed for maintenance per year.

Reference: DLB-392-77, JWF-2006-77, dated June 28, 1977.

Aluminum jacketing, TFE insulation effectively protect valves, piping at Wisconsin chemical plant

Durable, attractive and easy to maintain

RUDY H. WEISS, Chief Mechanic
Borden Chemical Co.
Sheboygan, Wis.

CP STAFF

New Solutions to Plant Problems

Problem: Adverse winter temperatures require special attention and effort in maintaining insulation and its protective metal jacketing on pipes and storage tanks at Borden Chemical Company's formaldehyde (CH_2O) plant in Sheboygan, Wis. All 12 formaldehyde 16,000-gal storage tanks and 90% of all product piping are located outdoors. Likewise, steam and condensate return lines leading from the boiler room building to the formaldehyde plant, resin plant and storage tanks are all exposed to Wisconsin winters.

Formaldehyde, which is made from oxidized methanol, is liquefied for increased handling ease. To prevent the solution from polymerizing, product lines and storage tanks must be well insulated to maintain a constant product temperature of 62°C.

One section of the Borden plant is 13 years old while the other has been in operation 11 years. All steam lines, providing service from 45 and 125 psi, have been insulated with 3 and 2" thick fiberglass, respectively. Scrubbers and the vaporizing columns are insulated with 2" thick fiberglass insulation protected with aluminum jacketing while storage tanks measuring 10'6" diam and 25' high are also protected with 2" insulation. All storage tanks and the majority of the piping at the plant has the original fiberglass insulation still in operation. This fiberglass material covered with corrugated aluminum jacketing has provided an effective insulating medium.

The problem has been in the area of valve insulation. Originally, all valves and other control components were insulated with asbestos cement and mastic membrane and were not protected with the same aluminum jacketing as the piping. This expensive cement covering has caused maintenance problems due to unsightly unraveling and cracking. In addition, the covering is difficult and time-consuming to install.

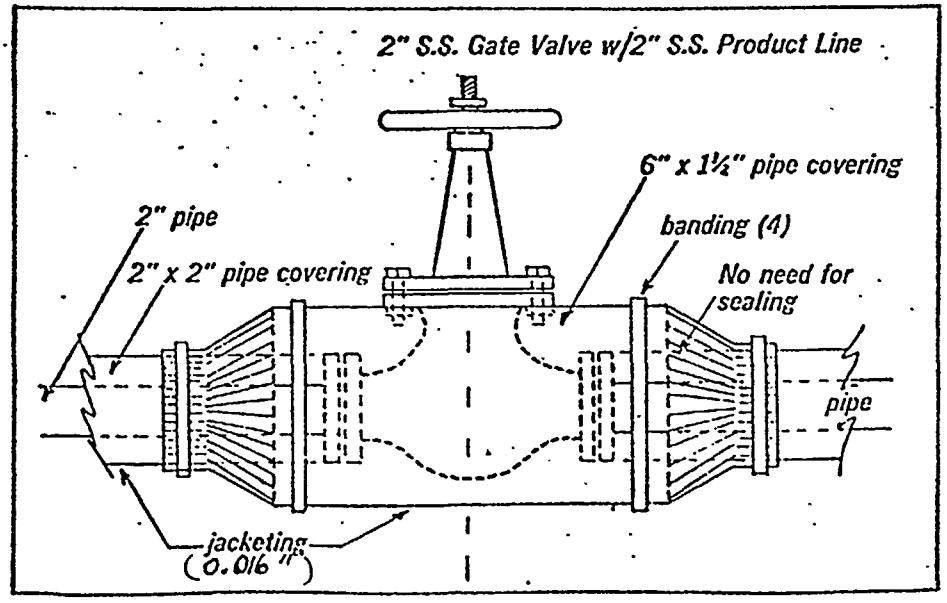

Schematic shows 2" stainless steel line with 2" thick insulation attached to a 2" stainless steel gate valve. The pipe is enclosed in fiberglass and aluminum jacketing. Corrugated aluminum jacketing of 0.016" thickness also covers the valve

Solution: Approximately one year ago, the asbestos cement and membrane covering began to be "phased out" at Borden and was replaced with corrugated aluminum jacketing. Valves and other control devices are being covered with easy-to-install, 0.016" thickness aluminum jacketing. The jacketing has bends located on each end. The jacketing, which is purchased in rolls 36" wide by 100 ft, is laid out and cut to proper size strips by the installer. A cutout area in the middle of the jacket exists for the valve bonnet. The jacketing slits at the end are about 1" apart and are cut before bending. The material is then pre-rolled by hand around the valve.

For example, a 2" stainless steel gate valve with 2" piping covered with 2 x 2" pipe fiberglass insulation uses a 6 x 1½" pipe covering to protect the valve. Aluminum jacketing will be banded with ¾" wide aluminum strips in four places: near the valve/pipe connection and over the

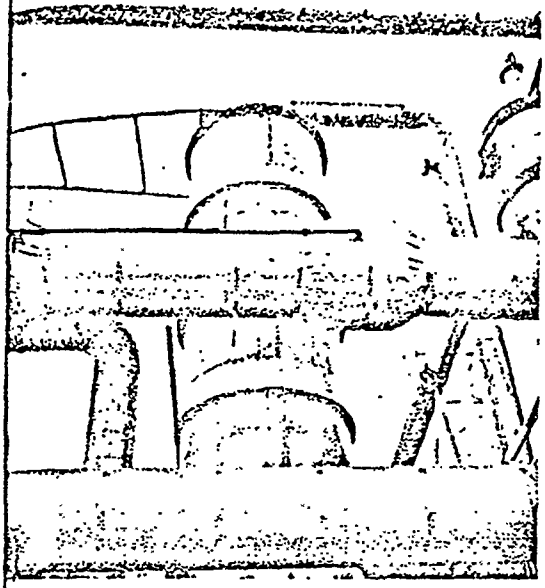

Because piping and tanks are located outdoors and are consequently subjected to a harsh winter climate, insulation is a must. Shown is a 6" pipe and control valve covered with aluminum jacketing and secured with ¾" wide aluminum banding.

pipe. There is no need for sealing the jacketing at the ends. (See diagram.)

Results: The aluminum jacketing over the valves and piping has provided easy-to-install insulation that is effective, non-discoloring and aesthetically pleasing. In areas where banding of the jacketing was more difficult, pop rivets were used to make the connections between the jacketing pieces.

Excellent durability and easy maintenance have made the corrugated aluminum jacketing on valves a welcome improvement to the Borden plant. Presently, 5% of the valves have been recovered with aluminum jacketing. Even after the harsh winter of 1977, the insulation was performed with outstanding results.

The aluminum jacketing for the valves and piping was supplied by Childer's Products Co., PO Box 22228, Cleveland, OH 44122.

Circle 413 opposite last page.

Fiberglass Snap on pipe covering is a product of CertainTeed Corp., PO Box 860, Valley Forge, PA 19482.

Circle 414 opposite last page.

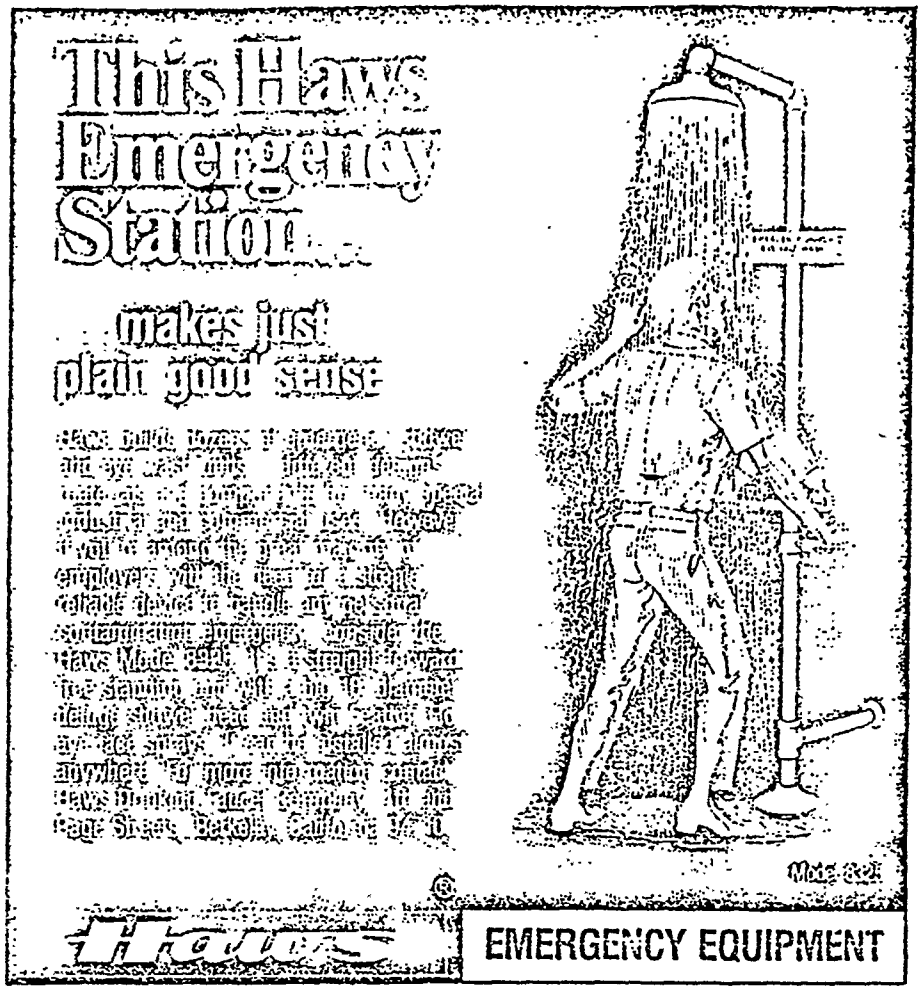

Circle 415 opposite last page.

We have the salts you need for heat transfer.

We have a variety of salts ready to do a better job in your heat transfer system. Better because they have a working range of 350 to 1100°F, they're nonflammable, won't foul surfaces, and will hold uniform temperatures.

For information, call our nearest office listed below. Or write Dept. CP at the Detroit address.

Park since 91

PARK CHEMICAL COMPANY

8074 Military Avenue • Detroit, Mich. 48204 (313) 895-7715 Subsidiary: PARK THERMAL LIMITED, 62 Todd Road, Georgetown, Ontario, Canada (416) 877-5254 Philadelphia Area Plant: 735 Birch Street, Cornwells Heights, Pa. 19020 (215) 637-0550. Licensee: CALIFORNIA ALLOY CO., Los Angeles, CA 91733 (213) 579-3230

Circle 416 opposite last page.

APPENDIX E

Uninsulated Steam Valves

During the energy conservation survey, uninsulated steam valves were counted in each of the units. They were grouped into three size categories; 3", 6", 12". The valves were further divided into categories depending upon the steam service: 15 psig, 60 psig, 160 psig, 600 psig.

The surface area of the valves was calculated conservatively to be equal to the area of 2 flanges and a tee. The approximate insulation cost was taken from DLB-392-77 ("Economics of Insulating Valves and Flanges"). The insulation cost on valves is a continuing cost depending on how many times a year the valves have to be torn into for maintenance. The insulation costs listed in Table E-I are the initial costs. Repair/replacement of insulation more than once per year would rule out the insulation of 3" 15 psig steam valves. A more realistic maintenance frequency is probably once every 2 years and this would justify the insulation of 3" 15 psig steam valves. Table E-I contains a summary of uninsulated valves and potential savings in each unit.

004736

TABLE E-I

Uninsulated Steam Valves

Valve Size	Process Temp.	Number of Valves	Savings Per Valve, $	Insulation Cost Per Valve, $	Approximate Insulation Cost, $	Estimated Annual Savings, $
		UTILITIES - H_2 UNIT				
12"	600# Stm at 450° F	6	2,610	250	1,500	15,660
12"	160# Stm at 350° F	4	1,538	250	1,000	6,152
12"	60# Stm at 300° F	5	1,004	250	1,250	5,020
12"	15# Stm at 250° F	0	599	250	0	0
6"	600# Stm at 450° F	8	1,055	180	1,440	8,440
6"	160# Stm at 350° F	14	621	180	2,520	8,694
6"	60# Stm at 300° F	1	405	180	180	405
6"	15# Stm at 250° F	0	242	180	0	0
3"	600# Stm at 450° F	2	508	150	300	1,016
3"	160# Stm at 350° F	18	299	150	2,700	5,382
3"	60# Stm at 300° F	9	195	150	1,350	1,755
3"	15# Stm at 250° F	0	117	150	0	0
	TOTAL				12,240	52,524

004737

TABLE E-I (Cont'd)

Valve Size	Process Temp.	Number of Valves	Savings Per Valve, $	Insulation Cost Per Valve, $	Approximate Insulation Cost, $	Estimated Annual Savings, $
		UTILITIES - BOILERS				
12"	600# Stm at 450° F	10	2,610	250	2,500	26,100
12"	160# Stm at 350° F	12	1,538	250	3,000	18,456
12"	60# Stm at 300° F	18	1,004	250	4,500	18,072
12"	15# Stm at 250° F	12	599	250	3,000	7,188
6"	600# Stm at 450° F	12	1,055	180	2,160	12,660
6"	160# Stm at 350° F	25	621	180	4,500	15,525
6"	60# Stm at 300° F	6	405	180	1,080	2,430
6"	15# Stm at 250° F	10	242	180	1,800	2,420
3"	600# Stm at 450° F	21	508	150	3,150	10,668
3"	160# Stm at 350° F	4	299	150	600	1,196
3"	60# Stm at 300° F	4	195	150	600	780
3"	15# Stm at 250° F	1	117	150	150	117
	TOTAL				27,040	115,612

TABLE E-I (Cont'd)

Valve Size	Process Temp.	Number of Valves	Savings Per Valve, $	Insulation Cost Per Valve, $	Approximate Insulation Cost, $	Estimated Annual Savings, $
			AREA I - UTILITIES			
12"	600# Stm at 450° F	9	2,610	250	2,250	23,490
12"	160# Stm at 350° F	4	1,538	250	1,000	6,152
12"	60# Stm at 300° F	0	1,004	250	0	0
12"	15# Stm at 250° F	7	599	250	1,750	4,193
6"	600# Stm at 450° F	7	1,055	180	1,260	7,385
6"	160# Stm at 350° F	16	621	180	2,880	9,936
6"	60# Stm at 300° F	14	405	180	2,520	5,670
6"	15# Stm at 250° F	0	242	180	0	0
3"	600# Stm at 450° F	19	508	150	2,850	9,652
3"	160# Stm at 350° F	13	299	150	1,950	3,887
3"	60# Stm at 300° F	15	195	150	2,250	2,925
3"	15# Stm at 250° F	0	117	150	0	0
	TOTAL				18,710	73,290

TABLE E-I (Cont'd)

Valve Size	Process Temp.	Number of Valves	Savings Per Valve, $	Insulation Cost Per Valve, $	Approximate Insulation Cost, $	Estimated Annual Savings,
			BuOH			
12"	600# Stm at 450° F	3	2,610	250	750	7,830
12"	160# Stm at 350° F	4	1,538	250	1,000	6,152
12"	60# Stm at 300° F	6	1,004	250	1,500	6,024
12"	15# Stm at 250° F	0	599	250	0	0
6"	600# Stm at 459° F	9	1,055	180	1,620	9,495
6"	160# Stm at 350° F	30	621	180	5,400	18,630
6"	60# Stm at 300° F	25	405	180	4,500	10,125
6"	15# Stm at 250° F	0	242	180	0	0
3"	600# Stm at 450° F	10	508	150	1,500	5,080
3"	160# Stm at 350° F	15	299	150	2,250	4,485
3"	60# Stm at 300° F	25	195	150	3,750	4,875
3"	15# Stm at 250° F	0	117	150	0	0
	TOTAL				22,270	72,696

004740

TABLE E-I (Cont'd)

Valve Size	Process Temp.	Number of Valves	Savings Per Valve, $	Insulation Cost Per Valve, $	Approximate Insulation Cost, $	Estimated Annual Savings, $
			AcH UNIT			
12"	600# Stm at 450° F	5	2,610	250	1,250	13,050
12"	160# Stm at 350° F	3	1,538	250	750	4,614
12"	60# Stm at 300° F	5	1,004	250	1,250	5,020
12"	15# Stm at 250° F	3	599	250	750	1,797
6"	600# Stm at 450° F	10	1,055	180	1,800	10,550
6"	160# Stm at 350° F	15	621	180	2,700	9,315
6"	60# Stm at 300° F	15	405	180	2,700	6,075
6"	15# Stm at 250° F	6	242	180	1,080	1,452
3"	600# Stm at 450° F	20	508	150	3,000	10,160
3"	160# Stm at 350° F	7	299	150	1,050	2,093
3"	60# Stm at 300° F	10	195	150	1,500	1,950
3"	15# Stm at 250° F	10	117	150	1,500	1,170
	TOTAL				19,330	67,246

004741

TABLE E-I (Cont'd)

Valve Size	Process Temp.	Number of Valves	Savings Per Valve, $	Insulation Cost Per Valve, $	Approximate Insulation Cost, $	Estimate Annual Savings,
			SO UNIT			
12"	600# Stm at 450° F	2	2,610	250	500	5,220
12"	160# Stm at 350° F	0	1,538	250	0	0
12"	60# Stm at 300° F	2	1,004	250	500	2,008
12"	15# Stm at 250° F	0	599	250	0	0
6"	600# Stm at 450° F	0	1,055	180	0	0
6"	160# Stm at 350° F	10	621	180	1,800	6,210
6"	60# Stm at 300° F	0	405	180	0	0
6"	15# Stm at 250° F	0	242	180	0	0
3"	600# Stm at 450° F	5	508	150	750	2,540
3"	160# Stm at 350° F	5	299	150	750	1,495
3"	60# Stm at 300° F	0	195	150	0	0
3"	15# Stm at 250° F	0	117	150	0	0
	TOTAL				4,300	17,473

004742

TABLE E-I (Cont'd)

Valve Size	Process Temp.	Number of Valves	Savings Per Valve, $	Insulation Cost Per Valve, $	Approximate Insulation Cost, $	Estimated Annual Savings, $
			VA UNIT			
12"	600# Stm at 450° F	2	2,610	250	500	5,220
12"	160# Stm at 350° F	3	1,538	250	750	4,614
12"	60# Stm at 300° F	5	1,004	250	1,250	5,020
12"	15# Stm at 250° F	3	599	250	750	1,797
6"	600# Stm at 450° F	6	1,055	180	1,080	6,330
6"	160# Stm at 350° F	20	621	180	3,600	12,420
6"	60# Stm at 300° F	25	405	180	4,500	10,125
6"	15# Stm at 250° F	4	242	180	720	968
3"	600# Stm at 450° F	10	508	150	1,500	5,080
3"	160# Stm at 350° F	13	299	150	1,950	3,887
3"	60# Stm at 300° F	11	195	150	1,650	2,145
3"	15# Stm at 250° F	5	117	150	750	585
	TOTAL				19,000	58,191

TABLE F-I (Cont'd)

Valve Size	Process Temp.	Number of Valves	Savings Per Valve, $	Insulation Cost Per Valve, $	Approximate Insulation Cost, $	Estimated Annual Savings, $
			HNO_3			
12"	600# Stm at 450° F	0	2,610	250	0	0
12"	160# Stm at 350° F	0	1,538	250	0	0
12"	60# Stm at 300° F	5	1,004	250	1,250	5,020
12"	15# Stm at 250° F	0	599	250	0	0
6"	600# Stm at 450° F	4	1,055	180	720	4,220
6"	160# Stm at 350° F	0	621	180	0	0
6"	60# Stm at 300° F	0	405	180	0	0
6"	15# Stm at 250° F	0	242	180	0	0
3"	600# Stm at 450° F	18	508	150	2,700	9,144
3"	160# Stm at 350° F	13	299	150	1,950	3,887
3"	60# Stm at 300° F	3	195	150	450	585
3"	15# Stm at 250° F	7	117	150	1,050	819
	TOTAL				8,120	23,675

004744

TABLE E-I (Cont'd)

Valve Size	Process Temp.	Number of Valves	Savings Per Valve, $	Insulation Cost Per Valve, $	Approximate Insulation Cost, $	Estimated Annual Savings, $
			CHOX			
12"	600# Stm at 450° F	3	2,610	250	750	7,830
12"	160# Stm at 350° F	8	1,538	250	2,000	12,304
12"	60# Stm at 300° F	17	1,004	250	4,250	17,068
12"	15# Stm at 250° F	1	599	250	250	599
6"	600# Stm at 450° F	9	1,055	180	1,620	9,495
6"	160# Stm at 350° F	16	621	180	2,880	9,936
6"	60# Stm at 300° F	5	405	180	900	2,025
6"	15# Stm at 250° F	29	242	180	5,220	7,018
3"	600# Stm at 450° F	12	508	150	1,800	6,096
3"	160# Stm at 350° F	0	299	150	0	0
3"	60# Stm at 300° F	22	195	150	3,300	4,290
3"	15# Stm at 250° F	0	117	150	0	0
	TOTAL				22,970	76,661

TABLE F-I (Cont'd)

Valve Size	Process Temp.	Number of Valves	Savings Per Valve, $	Insulation Cost Per Valve, $	Approximate Insulation Cost, $	Estimate Annual Savings,
			HDO			
12"	600# Stm at 450° F	1	2,610	250	250	2,610
12"	160# Stm at 350° F	0	1,538	250	0	0
12"	60# Stm at 300° F	1	1,004	250	250	1,004
12"	15# Stm at 250° F	0	599	250	0	0
6"	600# Stm at 450° F	20	1,055	180	3,600	21,100
6"	160# Stm at 350° F	10	621	180	1,800	6,210
6"	60# Stm at 300° F	0	405	180	0	0
6"	15# Stm at 250° F	0	242	180	0	0
3"	600# Stm at 450° F	11	508	150	1,650	5,588
3"	160# Stm at 350° F	3	299	150	450	897
3"	60# Stm at 300° F	3	195	150	450	585
3"	15# Stm at 250° F	3	117	150	450	351
	TOTAL				8,900	38,345

004746

TABLE E-I (Cont'd)

Valve Size	Process Temp.	Number of Valves	Savings Per Valve, $	Insulation Cost Per Valve, $	Approximate Insulation Cost, $	Estimated Annual Savings, $
			HMDA			
12"	600# Stm at 450° F	1	2,610	250	250	2,610
12"	160# Stm at 350° F	1	1,538	250	250	1,538
12"	60# Stm at 300° F	0	1,004	250	0	0
12"	15# Stm at 250° F	0	599	250	0	0
6"	600# Stm at 450° F	11	1,055	180	1,980	11,605
6"	160# Stm at 350° F	18	621	180	3,240	11,178
6"	60# Stm at 300° F	14	405	180	2,520	5,670
6"	15# Stm at 250° F	0	242	180	0	0
3"	600# Stm at 450° F	30	508	150	4,500	15,240
3"	160# Stm at 350° F	20	299	150	3,000	5,980
3"	60# Stm at 300° F	13	195	150	1,950	2,835
3"	15# Stm at 250° F	0	117	150	0	0
	TOTAL				17,690	56,356

004747

TABLE E-I (Cont'd)

Valve Size	Process Temp.	Number of Valves	Savings Per Valve, $	Insulation Cost Per Valve, $	Approximate Insulation Cost, $	Estimate Annual Savings,
			ADA UNIT			
12"	600# Stm at 450° F	0	2,610	250	0	0
12"	160# Stm at 350° F	0	1,538	250	0	0
12"	60# Stm at 300° F	5	1,004	250	1,250	5,020
12"	15# Stm at 250° F	4	599	250	1,000	2,396
6"	600# Stm at 450° F	0	1,055	180	0	0
6"	160# Stm at 350° F	4	621	180	720	2,484
6"	60# Stm at 300° F	12	405	180	2,160	4,860
6"	15# Stm at 250° F	17	242	180	3,060	4,114
3"	600# Stm at 450° F	7	508	150	1,050	3,556
3"	160# Stm at 350° F	3	299	150	450	897
3"	60# Stm at 300° F	6	195	150	900	1,170
3"	15# Stm at 250° F	10	117	150	1,500	1,170
	TOTAL				12,090	25,667

004748

TABLE E-I (Cont'd)

Valve Size	Process Temp.	Number of Valves	Savings Per Valve, $	Insulation Cost Per Valve, $	Approximate Insulation Cost, $	Estimated Annual Savings, $
			NS UNIT			
12"	600# Stm at 450° F	0	2,610	250	0	0
12"	160# Stm at 350° F	0	1,538	250	0	0
12"	60# Stm at 300° F	4	1,004	250	1,000	4,016
12"	15# Stm at 250° F	5	599	250	1,250	2,995
6"	600# Stm at 450° F	0	1,055	180	0	0
6"	160# Stm at 350° F	4	621	180	720	2,484
6"	60# Stm at 300° F	12	405	180	2,160	4,860
6"	15# Stm at 250° F	18	242	180	3,240	4,356
3"	600# Stm at 450° F	8	508	150	1,200	4,064
3"	160# Stm at 350° F	2	299	150	300	598
3"	60# Stm at 300° F	5	195	150	750	975
3"	15# Stm at 250° F	10	117	150	1,500	1,170
	TOTAL				12,120	25,518

004749

TABLE E-I (Cont'd)

Valve Size	Process Temp.	Number of Valves	Savings Per Valve, $	Insulation Cost Per Valve, $	Approximate Insulation Cost, $	Estimated Annual Savings, $
			AREA II TANK FARM			
12"	600# Stm at 450° F	0	2,610	250	0	0
12"	160# Stm at 350° F	0	1,538	250	0	0
12"	60# Stm at 300° F	0	1,004	250	0	0
12"	15# Stm at 250° F	0	599	250	0	0
6"	600# Stm at 450° F	0	1,055	180	0	0
6"	160# Stm at 350° F	0	621	180	0	0
6"	60# Stm at 300° F	1	405	180	180	405
6"	15# Stm at 250° F	0	242	180	0	0
3"	600# Stm at 450° F	2	508	150	300	1,016
3"	160# Stm at 350° F	7	299	150	1,050	2,093
3"	60# Stm at 300° F	31	195	150	4,650	6,045
3"	15# Stm at 250° F	0	117	150	0	0
	TOTAL				6,180	9,559

004750