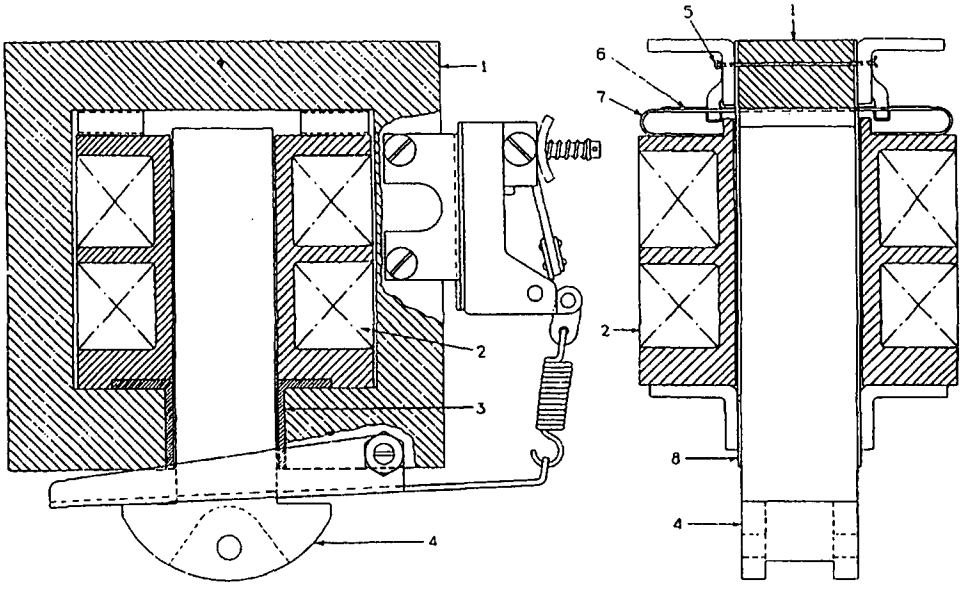

Fig. 7. IC9503-211E solenoid with cutout switch

SHOE LININGS

The shoe linings are made of compressed woven asbestos and put on with aluminum rivets. In relining the shoes, either brass or aluminum rivets can be used.

TO REMOVE COILS OF IC9516-160 AND -161 BRAKES

To remove *horizontally*, turn screw (5), Fig. 1, up about 1/4 inch. Turn the four bolts (1) out of the base, but do not remove them. Then lift up on the solenoid and slide it off horizontally. In doing this, care must be taken to support the lower end of the coil after leaving base. The coil may then be lifted from the solenoid magnet frame.

To remove *vertically*, remove pin (11), Fig. 1. Back off nut (14) and remove nut (7). Lift the lever and parts out. Remove back stops (4). Then remove bolts (1) and lift cover and coil out.

TO INSTALL COILS OF IC9516-160 AND -161 BRAKES

If removed horizontally, the assembled solenoid should be slid horizontally into position, at the same time supporting the lower end of the coil, then screw into place the four bolts (1) and make adjustments.

If removed *vertically*, assemble the solenoid on the base, then screw into place bolts (1), and place stops (4), Fig. 1, the lever, and other parts in position.

After the coil has been installed, the brake should be readjusted as described on pages 2 and 3.

ASSEMBLING AND DISASSEMBLING COILS ON IC9516-461 BRAKES

This solenoid consists of a frame (1), a plunger (4), a coil (2), two insulation pieces (6), two springs (7), two plunger guides (8), two angle guides (3), and a cotter key (5).

To disassemble, remove the plunger, cotter key, plunger guides, and angle guides in the order named.

To assemble, invert the solenoid and locate insulation pieces (6) and springs (7) as shown in Fig. 7. Place the coil on top of the springs and assemble the angle guides (3) and plunger guides (8). Fasten with cotter key (5).

ASSEMBLING AND DISASSEMBLING COILS ON IC9516-462, -463, -464 AND -465 BRAKES

This solenoid consists of a frame (4), a plunger (8), two coils (5), two insulation pieces (2), two springs (3), two angle guides (6), two plunger guides (7), and cotter key (1).

To disassemble, remove the plunger, cotter key, plunger guides, and angle guides in the order named.

GLEASON-000131