Table 1 .... Sizing Condenser Drain Line[1]

Pipe Size Condenser to Receiver In.	Ammonia at 100 Fpm Velocity Lb per Min
¾	3.5
1	5.9
1¼	11
1½	18
2	32
2½	44
3	85
4	121
6	186
	322
	727

[1] Application Data-York Corp.

Vertical Condensers and Surge Receiver

The piping of two vertical condensers and a surge receiver is illustrated in Fig. 16.

A surge receiver takes care only of the normal fluctuation of refrigerant supply to the various evaporators. It is not generally sized to hold a large amount of refrigerant for storage purposes. An equalizing connection is always needed on the surge receiver to relieve the gas pressure above the liquid level. Sizing of the equalizing lines can be made from Table 2.

The liquid line from the condenser to receiver can be based on a velocity of 150 to 200 fpm and can be sized from Table 3 or from Chapter 69. The reason for this higher velocity (as compared with 100 fpm on through type receivers) is that the line can be run full of liquid. It is not necessary to allow room for gas, which might flash in a warm receiver, to find its way back up the same line to the condenser without restricting liquid drainage from the condenser.

An oil drain is shown from the lowest part of each condenser into an oil receiver. Oil, being heavier than ammonia liquid, will settle out at the lowest point. Prior to removing oil from the receiver, the drains from the condensers should be closed and the suction valve to the pump-out compressor or to any low-suction pressure compressor should be opened to clear ammonia out of the oil.

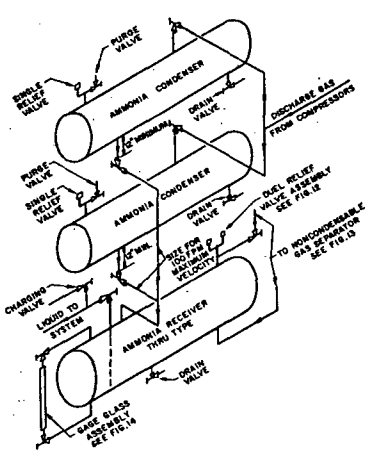

Fig. 15 .... Parallel Condensers with Through Receiver

Table 2 .... Equalizing Line Size Surge Receivers[1]

Maximum Plant Capacity Tons	Equalizing Line Size Schedule 40 Pipe In.
220	¾
300	1
500	1¼

[1] Application Data—York Corp.

Evaporative Condenser

When a single evaporative condenser is used with a through type receiver it can be connected as shown in Fig. 17. Equalization between the evaporative condenser and receiver is obtained in the liquid drain line which is sized in accordance with Table 1. Therefore, it is important that no traps be allowed in this line. The receiver should be located in the shade; never in the sun.

In areas where temperatures below 32 F are encountered, provision must be made to prevent the water from freezing at light plant loads. When freezing temperature is reached, the evaporative condenser can usually operate as a dry coil unit satisfactorily. One method of preventing the water from freezing is to place the water tank inside and have it installed as illustrated in Fig. 18. When the outdoor temperature drops, the head pressure drops and a pressure switch, with its sensing element in the discharge pressure line, stops the water pump—the water being drained into the tank. Provision should be made to drain the exposed piping and also any trapped water headers in the evaporative condenser. This is usually the last step in maintaining the plant head pressure for good ammonia distribution to the various evaporators. The first step in maintaining head pressure control is to have a pressure actuating device on the discharge line to modulate air dampers in the air stream, either entering or leaving the evaporative condenser, or to have an air bypass arrangement from leaving

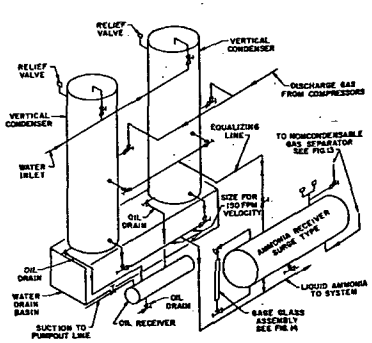

Fig. 16 .... Parallel Vertical Condensers with Surge Receiver

Table 3 .... Condenser to Receiver Piping Surge Receiver[1]

Pipe Size	Lb Ammonia/Min	
	150 fpm	200 fpm
¾	16	22
1	27	36
1¼	49	65
1½	67	89
2	127	170
2½	180	240
3	280	370
4	480	640
6	1090	1450

[1] Application Data—York Corp.

to entering. A two-speed fan motor is sometimes used in conjunction with the air throttling method.

Parallel Operation of Evaporative Condensers

Evaporative condensers have an inherent pressure drop due to the fact that gas flows through relatively small pipes in fairly long circuits. With two evaporative condensers of unequal size, pressure drop through each coil at rated load will probably be different and this has to be considered in the design of the drain piping and equalizing piping between the evaporative condenser and the receiver. The essential requirement in connecting evaporative condensers in parallel is that sufficient vertical height must be provided in trapped liquid legs to allow the liquid to seek separate levels and counteract the varying effect of refrigerant pressure drop in the evaporative condensers without backing up liquid into the condensing coil which has the highest pressure drop.

Fig. 19 illustrates two evaporative condensers of unequal size interconnected with one through type receiver. The receiver is equalized with the gas inlet line. This means that the pressure in the top of the receiver and in the gas inlet line will be the same. The equalizing line may be sized from Table 4. At the outlet of each evaporative condenser, the pressure will be different due to the different coil pressure drop. Therefore, the liquid will stand in the vertical pipe to a different height in each case.

Representative values have been shown on Fig. 19 to illustrate one evaporative condenser with a 1 psi pressure drop and one with a 0.5 psi pressure drop. The pressure drop in the discharge line is included in the calculations.

For each 1 psi difference between coil outlet pressure and receiver pressure, four feet height of static ammonia is required. Therefore, with an outlet pressure of 183.8 psig and a receiver pressure of 185.0 psig, a height of 1.2 psi × 48 in. or approximately 58 in. is required.

Provision must be made to valve off idle evaporative condensers. Purging of air from this type of system is difficult because air can only reach the receiver through the equalization line off the discharge line, or through the liquid drain line if the system is shut down for an extended period. The best locations to purge from during operation are at the purge valves connected to the top of the drain line from each condenser.

If control of head pressure is designed into this type of system, it is necessary that the proportion of tonnage from

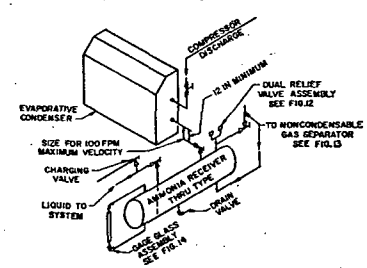

Fig. 17 .... Piping for Single Evaporative Condenser and Through Receiver

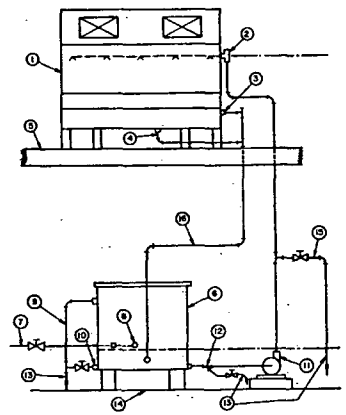

Fig. 18 .... Evaporative Condenser with Inside Water Tank

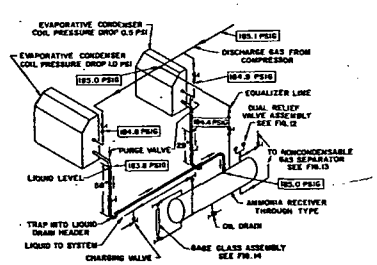

Fig. 19 .... Piping for Two Unequal Evaporative Condensers with One Through Receiver