Exhibit



PURPOSE OF THE TYLER STUDY

To determine the feasibility of combining Tyler's and its operating companies' insurance programs into one program and the associated cost savings generated by that combination of purchasing power.

The general categories of coverage included in the study were:

- Workers' Compensation and Employer's Liability;
- Automobile Liability (including cargo where applicable);
- General Liability (liability from operations, premises, products sold); and
- Corporate Umbrella Coverage.

CRITERIA OF THE TYLER STUDY

(A) To establish if the possibility of substantial cost savings exists and the extent of same without infringing on the operating companies' staffs.

(B) Total program will be compatible with Tyler's and its operating companies' financial concerns and plans.

(C) Complete maintenance of autonomy for operations by the individual operating companies, including selection and continued use of local insurance agency services.

(D) Each operating company will continue to manage its own insurance programs without Tyler's involvement.

(E) All costs and/or savings will be allocated back to each operating company based on premiums and losses.

(F) Tyler Corporation's staff will do the accounting for all companies.

8/1/80

CONCEPTS

- Large corporations pay dollar for dollar the total cost of their own claims; insurance is financial tool for leveling losses.

- Combination of entities will allow significant economies of scale.

- Recommended program will allow purchase of catastrophic protection on wholesale versus retail basis because of the volume of insurance and the fronting company/reinsurance marketing approach.

WHY A RENT-A-CAPTIVE APPROACH FOR TYLER AND ITS OPERATING COMPANIES

- Potential tax shelter.
- Tax deductibility of loss reserves.
- Reduction of fixed costs.
- Investment income from loss reserves.
- Risk spreading.
- Aggregate stop loss.

8/1/80

PROPOSED TYLER PROGRAM

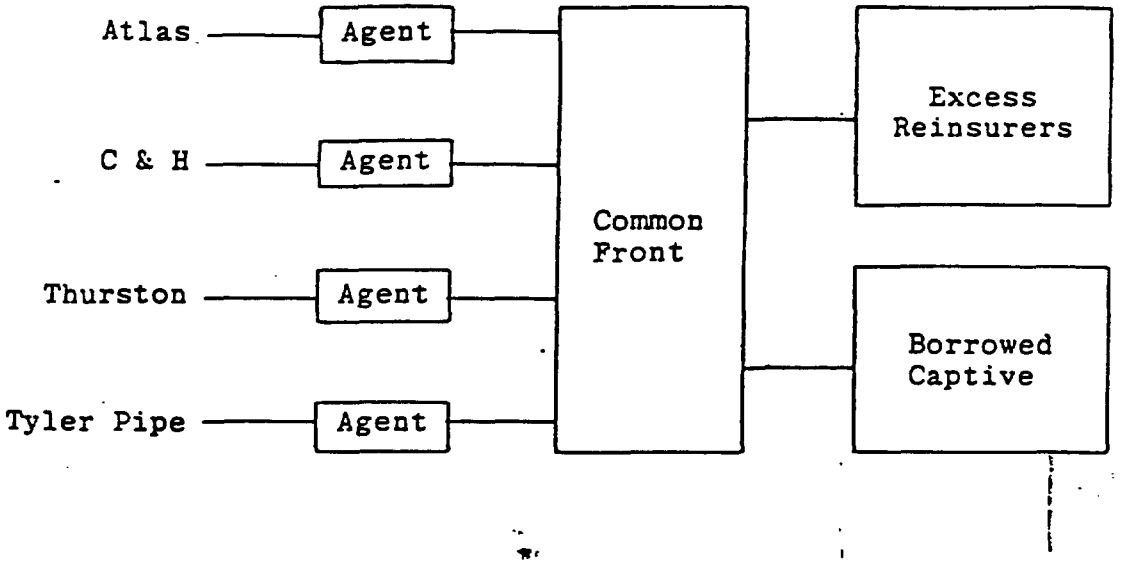

Savings will be generated by:

- using common fronting company.
- purchasing catastrophic protection on wholesale versus retail basis.
- investing income earned by borrowed captive.
- tax deductibility of premiums paid to fronting company.

8/1/80

Cost savings shown are in no way a reflection on our operating companies' insurance programs. The savings generated are available only because of the combination of all our insurance programs into a large enough account to wield considerable leverage in negotiating coverages. In addition, our use of a captive-type mechanism affords us the opportunity to purchase volume insurance on a wholesale basis.

TYLER CORPORATION

PRIMARY AND UMBRELLA INSURANCE

CURRENT VS. PROPOSED PLAN COST COMPARISON

All Companies Combined

	Current Premiums	Proposed Plan High/Low	Potential Fixed Cost Savings Low/High
Primary	$ 3,300,000	$ 2,600,000 to $ 2,000,000	$ 700,000 to $ 1,300,000
Umbrella	$ 1,300,000	$ 1,000,000 to $ 800,000	$ 300,000 to $ 500,000
TOTALS	$ 4,600,000	$ 3,600,000 to $ 2,800,000	$ 1,000,000 to $ 1,800,000

D0000028

8/1/80

BENEFIT LEVEL

40% OF FINAL PAY, INCLUDING BONUSES, LESS 50% OF PRIMARY SOCIAL SECURITY BENEFIT AFTER 30 YEARS OF SERVICE.

8/1/80

ACTUARIAL ASSUMPTIONS

INVESTMENT RETURN	7.00%
SALARY INCREASE	6.25%

FUNDED STATUS - JANUARY 1, 1980

ACCRUED BENEFITS	
PRESENT VALUE	$ 21,774,864
ASSET VALUE	21,735,698
UNFUNDED (SURPLUS)	39,166
FUNDED PERCENTAGE	100%
VESTED BENEFITS	
PRESENT VALUE	$ 19,723,333
ASSET VALUE	21,735,698
UNFUNDED (SURPLUS)	(2,012,365)
FUNDED PERCENTAGE	110%

PENSION EXPENSE

1976 - 1980
(000's)

1976	$ 2,807
1977	3,690
1978	4,415
1979	4,223
1980	4,600*

*ESTIMATED

D0000032

8/1/80

ASSETS UNDER MANAGEMENT
AT 12/31/79

EQUITIES				
TYLER CORPORATION	$ 1.6	$	8.1%	
BANK EQUITY FUNDS	2.8		14.2	
OTHER	2.6		13.2	
		7.0		35.5%
BONDS		5.6		28.4
OTHER FIXED INVESTMENTS				
BANK FIXED FUNDS	1.1		5.6	
GIA CONTRACTS	1.4		7.1	
CERTIFICATES OF DEPOSIT	1.2		6.1	
CASH EQUIVALENTS (VANS)	3.4		17.3	
		7.1		36.1
TOTALS		$19.7		100.0%

D0000033

8/1/80