with a taper of 1 in 16 measured on the diameter of the pipe so as to secure a tight joint. The number of threads per inch varies with the pipe size. Threads for fittings are the same, except that it is regular practice to furnish straight tapped couplings for Schedule 40 pipe 2 in. and smaller. For steam pressures in excess of 25 psi, it is recommended that taper-tapped couplings be used to obtain a tight joint. These may be secured by ordering *line* pipe[2] which is used for oil piping, the couplings of which are provided with taper-tapped threads and may be used with regular mill-threaded standard weight pipe. Thread lengths should be in accordance with *ASA* B2.1. Right-hand threads are used unless otherwise ordered. To facilitate drainage, some elbows have the thread tapped at an angle to provide a pitch of the connecting pipe of $\frac{1}{4}$ in. to the foot. These elbows are

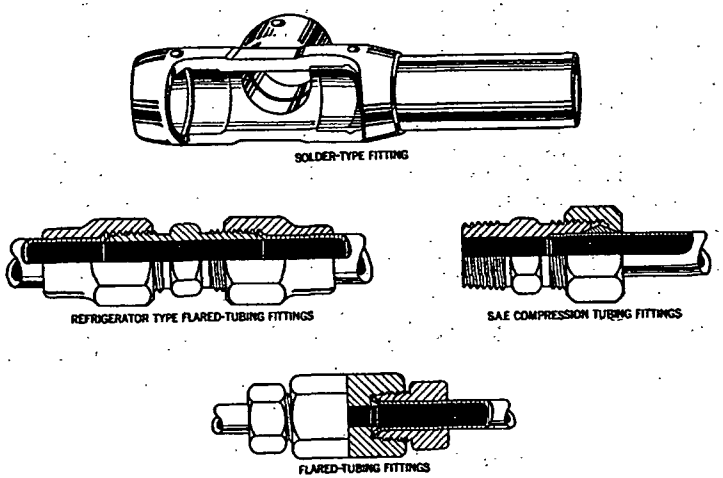

FIG. 2. COPPER OR BRASS TUBING FITTINGS

known to the trade as pitch elbows and are commercially available. All threaded pipe joints should be made up with a thread paste suitable for the service for which the pipe is to be used.

TYPES OF FITTINGS

Fittings for joining the separate lengths of pipe together are made in a variety of forms, and are either screwed or flanged, the former being generally used for the smaller sizes of pipe up to and including $3\frac{1}{2}$ in., and the latter for the larger sizes, 4 in. and above. Screwed fittings of large size, as well as flanged fittings of small size, are also made and are used for certain classes of work at the proper pressure.

The material used for fittings is generally cast-iron, but in addition to this, malleable-iron, steel and steel alloys are also used, as well as various grades of brass or bronze. The material to be used depends on the character of the service and the pressure. Malleable iron fittings, like brass fittings, are cast with a round instead of a flat band or bead, or with no bead at all. Fittings are designated as male or female, depending on whether the threads are on the outside or inside, respectively. Screwed galvanized fittings are made according to the 150 lb American Standard.

TABLE 5. AMERICAN STANDARD DIMENSIONS OF ELBOWS, TEES, CROSSES, AND 45 DEG ELBOWS, SOLDERED-JOINT FITTINGS, *ASA* A40.3-1941

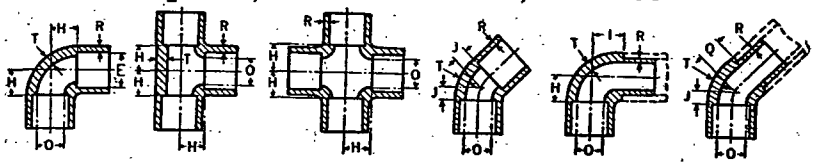

Nominal Size[a]	Cast Brass[b]							Wrought Metal	Bore of Fittings
	Laying Length, Tee, Ell, and Cross[b]	Laying Length, Ell With External Shoulder	Laying Length, 45 Deg Ell	Laying Length, 45 Deg Ell External Shoulder	Inside Diameter of Fittings, Min.	Metal Thickness[d]		Metal Thickness Min.[f]	
	H	I	J	Q	O	T	R	T and R	E, Min.
$\frac{1}{4}$	$\frac{1}{4}$	$\frac{3}{8}$	$\frac{5}{16}$	$\frac{1}{4}$	0.31	0.08	0.048	0.030	0.378
$\frac{3}{8}$	$\frac{5}{16}$	$\frac{7}{16}$	$\frac{3}{16}$	$\frac{5}{16}$	0.43	0.08	0.048	0.035	0.503
$\frac{1}{2}$	$\frac{7}{16}$	$\frac{9}{16}$	$\frac{3}{16}$	$\frac{5}{16}$	0.54	0.09	0.054	0.040	0.628
$\frac{3}{4}$	$\frac{9}{16}$	$\frac{11}{16}$	$\frac{1}{4}$	$\frac{3}{8}$	0.78	0.10	0.060	0.045	0.878
1	$\frac{3}{4}$	$\frac{7}{8}$	$\frac{5}{16}$	$\frac{7}{16}$	1.02	0.11	0.066	0.050	1.1285
$1\frac{1}{4}$	$\frac{7}{8}$	1	$\frac{7}{16}$	$\frac{9}{16}$	1.26	0.12	0.072	0.055	1.3785
$1\frac{1}{2}$	1	$1\frac{1}{8}$	$\frac{1}{2}$	$\frac{5}{8}$	1.50	0.13	0.078	0.060	1.629
2	$1\frac{1}{4}$	$1\frac{3}{8}$	$\frac{9}{16}$	$\frac{3}{4}$	1.98	0.15	0.090	0.070	2.129
$2\frac{1}{2}$	$1\frac{1}{2}$	$1\frac{5}{8}$	$\frac{5}{8}$	$\frac{7}{8}$	2.46	0.17	0.102	0.080	2.629
3	$1\frac{3}{4}$	$1\frac{7}{8}$	$\frac{3}{4}$	1	2.94	0.19	0.114	0.090	3.129
$3\frac{1}{2}$	2	$2\frac{1}{8}$	$\frac{7}{8}$	$1\frac{1}{8}$	3.42	0.20	0.120	0.100	3.629
4	$2\frac{1}{4}$	$2\frac{3}{8}$	$\frac{15}{16}$	$1\frac{1}{4}$	3.90	0.22	0.132	0.110	4.129
5	$3\frac{1}{8}$	.....	$1\frac{1}{16}$	.....	4.87	0.28	0.168	0.125	5.129
6	$3\frac{5}{8}$	.....	$1\frac{5}{8}$	.....	5.84	0.34	0.204	0.140	6.129

All dimensions given in inches.

[a] This size is the nominal bore of the tube.

[b] These dimensions may be used for wrought-metal fittings as well as for cast-brass fittings at manufacturer's option.

[c] This dimension is the same as the inside diameter Class L tubing (American Standard Specifications for Copper Water Tube, *ASA* H23.1-1939 (*A.S.T.M.* B88).

[d] Patterns shall be designed to produce body thicknesses given in the table. Metal thickness at no point shall be less than 90 percent of the thicknesses given in the table.

[e] This dimension has the same thicknesses as Type L tubing.

[f] These dimensions are minimum, but in every case the thickness of wrought fittings should be at least as heavy as the tubing with which it is to be used.

NOTE 1:—Wrought fittings, as well as cast fittings, must be provided with a shoulder or stop at the bottom end of socket.

NOTE 2:—Street fittings with male ends are for use in connection with other fittings illustrated.

As in the case of pipe, several weights of fittings are manufactured. Recognized American Standards for the various weights are as follows:

Cast-iron pipe flanges and flanged fittings for 25 lb (sizes 4 in. and larger), 125 lb, and 250 lb maximum saturated steam pressure, *ASA* B16b2, B16a, and B16b, respectively.

Malleable iron screwed fittings for 150 lb maximum saturated steam pressure, *ASA* B16c.

Cast-iron screwed fittings for 125 and 250 lb maximum saturated steam pressure *ASA* B16d.

Steel flanged fittings for 150 and 300 lb maximum steam service pressure, *ASA* B16e.

The allowable cold water working pressures for these standards vary from 43 lb for the 25 lb standard, to 500 lb for the 300 lb steel standard.

War standard ratings in effect for the duration of the emergency permitted higher ratings for certain sizes of the 125 lb cast-iron flanged