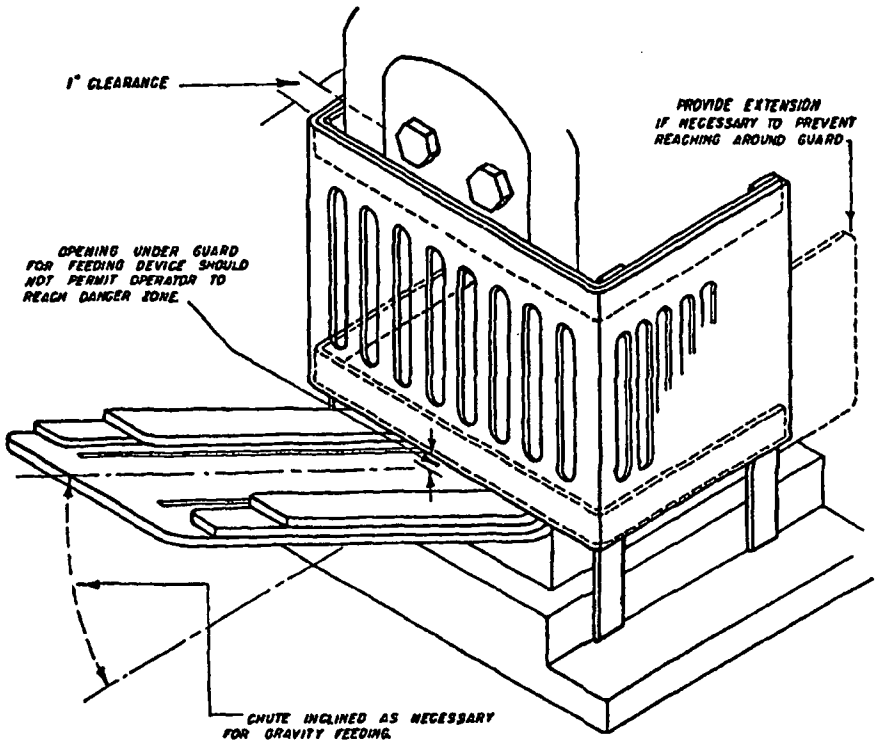

Fig. 23-25. A die enclosure guard with an inclined chute for gravity feeding. This guard may also be used on an inclined press but with a straight chute

Courtesy Liberty Mutual Insurance Company

The piece may be stripped by means of press knockouts, often built into the press by the manufacturer, or by means of spring- or rubber-activated plates or pads designed to push the piece loose from the punch or the die on the upward stroke of the press

Once a piece is loose on the tool, it may be ejected by gravity from an inclined press, by an air blowoff system timed with slide travel, by a mechanical or air cylinder push-off, by mechanical fingers, or by a combination of these methods Scrap can also be ejected by air jets Where necessary, a chisel punch may be used to cut up scrap which is difficult to remove unbroken.

Oiling rolls or pressure guns can be used instead of a paintbrush system to lubricate strip or roll stock Automatic or manual control pressure guns can be provided to lubricate the punch and the die

On *secondary operations*, selection of feeding and ejection methods which will make it unnecessary for the operator to place his hands in the point-of-operation zone is more difficult

When automatic feeding methods are used, it is still necessary to enclose the slide, to limit its stroke to ¼ in or less, or to provide a gate guard device, according to American Standard B11 1, *Safety Code for Power Presses*

Semiautomatic feeding devices place the piece being processed under the slide by a mechanical device which requires the atten-