The Vulcan Radiator Company

26 Francis Avenue — Hartford 6, Conn.

MANUFACTURERS OF FINNED TUBES FOR OVER TWO DECADES

Vulcan Radiation is used in railroad cars, ships, hospitals, schools, churches, homes and industrial plants. Available in steel or copper . . . easy to install . . . light in weight . . . requires few fittings and supports . . . tube ends threaded or chamfered for welding. Heat distribution is uniform. Steel radiation comes in two sizes . . . 2 in. IPS, rated—5¼ sq ft per lineal ft at 1 lb steam and 70 deg air . . . for 1¼ in. IPS see illustration—this size also available in copper.

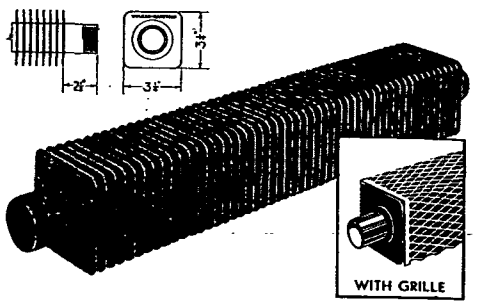

1¼ in. IPS, rated—4¼ sq ft per lineal ft.

Vulcan Radiation is fabricated by mechanically imbedding offset fins or plates on seamless steel pressure tube or copper water tube. The patented offset fin construction gives complete rigidity to the entire assembly and extends the heating surface of the tube.

Because of its comparatively light weight and compactness, Vulcan Radiation responds quickly to thermostatic control. Full heat output is obtained almost immediately after steam is supplied. Since most of the heat is given off by convection, the result is EVEN, UNIFORM HEAT from floor to ceiling.

Vulcan Baseboard Radiation . . . fin-on-tube construction with grille covers combines radiant and convection heating. High safe working pressure . . . either hot water or two-pipe steam systems. Light in weight . . . easy to install . . . requires few fittings or supports. Comes in two sizes . . . 1¼ in. IPS . . . steel fins 2¾ in. wide by 3¾ in. high. Rated 4.0 sq ft per lineal ft with St'd. Front. 3.7 sq ft per lineal foot with FS front. For 1 in. IPS see illustration. Also available in copper.

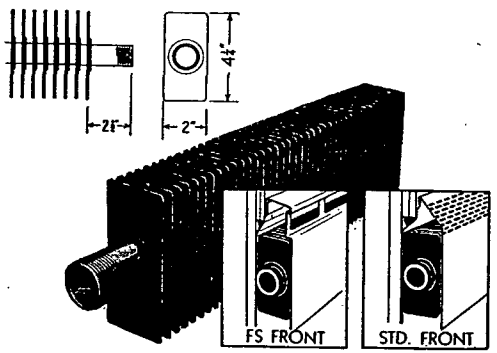

1 in. IPS . . . steel fins 2 in. wide, 4¼ in. high, Rated—3.6 sq ft per lineal ft at 1 lb steam and 70 deg air with Std. Front. 2.4 sq ft per lineal ft with FS front.

Contact Representatives in Principal Cities or Send for Catalog

Baltimore Aircoil Company, Inc.

715 West Pratt Street

Baltimore 1, Maryland

B.A.C. Evaporative Condensers are made in two standard models—The Model "U" condenser for either indoor or outdoor installation and the Model "CPE" for outside installation only.

Base Ratings are at 40 deg suction temperature, 105 deg condensing temperature, 78 deg wet bulb using Freon-12 refrigerant. All **B.A.C.** condensers are suitable for either Freon or Ammonia refrigerant.

Capacities on standard condensers range from 10TR (tons refrigeration) to 210 TR (tons refrigeration) in a single unit at base rating conditions and the B.A.C. standard line includes 52 different sizes, making it possible to select a standard condenser to match practically any requirement within the capacity range as stated above.

B.A.C. condensing coils are all prime surface full weight steel pipe, hot dipped galvanized after fabrication. Multiple circuit condensing coils can be furnished when required. Pump and fan motors are ball bearing type with special tropical insulation. Pumps are close coupled, bronze fitted, with mechanical seals. Sump pans and structural angles and channels used to reinforce the casing are all hot dipped galvanized.

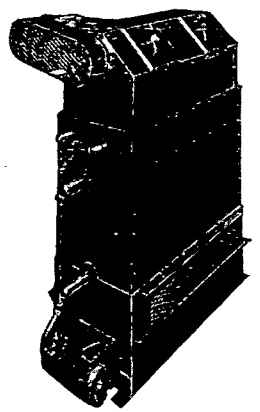

←Model "U" The Model "U" Evaporative Condenser has "squirrel cage" fans and removable eliminator section. The air is discharged at a 45 deg angle. The fan section can be rotated 180 deg on the coil section. The air intake can be on either side by interchanging the air inlet screen with the sump pan access door. The three above features make the standard Model "U" suitable for 16 different installation arrangements without the removal of a single bolt or screw. Large access doors provide admittance to sump pan and fan section for maintenance and servicing. The Model "U" condenser is normally shipped in two complete sections ready for installation.

Model "CPE" → The Model "CPE" Evaporative Condenser is very efficient, requiring approximately 40 per cent less horse power to operate than conventional condensers of equal capacity and is much more compact. The large wide blade propeller fan is extremely quiet in operation. The moving parts are reduced to a minimum and are so located that repair and maintenance costs are exceedingly low. This model condenser is particularly suited for "dry coil" operation in winter due to the air handling characteristics of the propeller fan. "CPE" condensers, due to their compact design, are built and shipped in one piece ready for installation.

