Monsanto

Poly-Aroclor

FROM (NAME & LOCATION): S. McWilliams, W. G. Krummrich Plant - Sauget, Illinois

DATE: June 20, 1972

CC:

SUBJECT:

REFERENCE:

COMPANY CONFIDENTIAL

TO : Messrs.

D. C. Armstrong	- WGK	F. J. Holzapfel	- B3NA
W. W. Ban	- WGK	D. B. Hosmer	- E1SF
E. R. Billen	- WGK	R. E. Howard	- F4WA
R. M. Blowers	- WGK	W. K. Johnson	- R2E
J. W. Boehm	- WGK	R. J. Kozacka	- F4WA
G. L. Bratsch	- WGK	W. A. Kuhn	- B3NA
A. R. Brown	- N1A	A. E. Leisy	- WGK
C. F. Buckley	- WGK	R. E. Lischer	- F4WA
A. J. Burns	- N1A	D. K. Lynch	- WGK
H. C. Carder	- B3NH	G. B. Maurer	- WGK
G. R. Davis	- WGK	R. M. McCutchan	- WGK
P. O. DeGarmo	- T3B	R. L. Nettesheim	- WGK
G. K. Dimkoff	- WGK	R. Perry	- N1A
F. M. Elliott	- WGK	W. B. Papageorge	- B2NK
W. C. Engman	- WGK	R. W. Peterson	- F4WC
R. L. Fields	- WGK	J. E. Smith	- B3NH
J. A. Hayes	- B3NH	R. R. Sorrell	- WGK
P. E. Heisler	- WGK	E. E. Stewart	- WGK
G. A. Hippe	- WGK	G. C. Vincent	- WGK
P. B. Hodges	- E1SF	D. L. Weber	- WGK
		H. G. Yapp	- WGK

Enclosed is a copy of the presentation given on June 9, 1972 concerning W. G. Krummrich Plant HCl recovery plans.

S. McWilliams
Technical Services Department

/tm
att.

CER 099648

PAUL HODGES DEPOSITION
May 31 - June 1, 1994
EXHIBIT NO. 39

CONFIDENTIAL 92-CV-204-WDS

BACKGROUND

The increasing need to supply a consistent amount of HCl gas to Dept. 217 (Chlorosulfonic Acid), the uncertainty of the Aroclor business and emphasis on the ecology has stressed the importance of the HCl situation at W. G. Krummrich Plant. In answer to these concerns, several projects have been initiated by TSD and Research. These projects include 1) the adiabatic absorption of the excess HCl, now being sewered, for sales as commercial grade muriatic acid, 2) vapor phase carbon adsorption of Dept. 233 (Chlorobenzene) HCl for use in Dept. 217, and 3) a group of projects to reduce the organic content of the HCl produced in Depts. 246 (Aroclor), 248 (Phosphate Esters), 236/7 (Chlorophenol) and 239 (Santophen I). The latter projects are lumped together and referred to as HCl gas clean-up projects.

PROJECT OBJECTIVES

Each project has its own specific objective, however, there is one objective common to all three projects and that is compliance with State and Federal pollution laws. More specifically, the plant has the following pollution objectives:

1) Reduce organics in the sewers by 80%
2) Have no known PCB losses
3) Reduce phenolics to ~15 lbs/day
4) Reduce dissolved solids to 750 ppm above background.

At the present time Dept. 233 HCl produces a colored chlorosulfonic acid which does not meet color specifications. Previous work has shown that vapor phase carbon treatment of this HCl will remove the color producer. However, such questions as what would be the carbon loading, is steam regeneration practical, can the carbon bed be dried sufficiently to prevent a serious corrosion problem, had to be answered with an experimental program. An experimental program was also needed for the adiabatic absorption of HCl to determine the acid quality and carbon usage to meet commercial grade acid specifications.

RESULTS TO DATE

Results to date in all three areas have been encouraging. These results are summarized in Table I. Based on these results it is felt that enough information is available to propose a possible HCl distribution system that would meet most if not all the stated project objectives. This proposed distribution system is shown in Figure 1 and includes the following features:

CONFIDENTIAL 92-CV-204-WDS

HARTOLDMON0007326

RESULTS TO DATE (cont'd)

1) Vapor phase carbon treatment of all Dept. 233 HCl.
2) Adiabatic absorption of the excess HCl gas.
3) Use of product scrubbers in Dept. 246 and 248.
4) Use of an existing or improved sulfuric acid scrubber on Depts. 236/7 and 239 HCl.
5) Centralized sewering of HCl.
6) Preferential use of Dept. 246 and 233 (continuous suppliers) HCl in Dept. 217.
7) Isolation of Dept. 246 HCl to Dept. 217 and the adiabatic absorber, no sewering possible of Dept. 246 HCl.
8) Isolation of Dept. 218 (Food grade muriatic acid) from all Depts. except 233.

ENVIRONMENTAL EFFECTS AND COST

The estimated effects on the environment and the estimated economics of the total distribution system are shown in Tables II and III. Table II shows reduction of over 95% in both air and stream pollution. The estimated cost of the total system is $1.1 M, with an ROI of 6.4% B.T. Including pollution related savings the ROI would be 29.0% B.T. This shows that pollution related savings and considerations play a major role in the justification of the entire project. For this reason these projects are considered an integral part of the W. G. Krummrich Plant's water reduction and pollution program.

FUTURE WORK AND TIMING

The vapor phase carbon treatment and adiabatic absorber projects are experimental projects which are nearing completion. A tentative process for vapor phase treatment should be completed by July 15, 1972. The adiabatic absorber tentative process and scope for an AR grade cost estimate by CED should be completed by July 1, 1972. A decision on the use of Haveg as an acceptable material of construction should also be made by then. The HCl gas clean-up projects still require much laboratory work primarily in Depts. 248, 236/7 and 239. This work should be completed in early fall (September or October) 1972.

CONFIDENTIAL 92-CV-204-WDS

HARTOLDMON0007327

TABLE I

PROJECT RESULTS TO DATE

I. HCl Gas Clean-up Projects - Scrubbing Tests

Dept.	HCl Gas Composition Leaving Scrubber Present	Max.	Proposed
246 (PCB)	125-140 ppm	1 ppm(1)	6-12 ppm(2)
248 (Phenolics)	1200 ppm	5-10 ppm(3)	15-20 ppm(4)
(Phosphorus)	800 ppm	25-50 ppm(3)	100-180 ppm(4)

236/7 - no results to date

239 - no results to date

(1) Using chlorosulfonic acid as the scrubbing liquor

(2) Using Aroclor 1016 as the scrubbing liquor

(3) Using 66° Be sulfuric acid as the scrubbing liquor

(4) Using TCP as the scrubbing liquor

II. Vapor Phase Carbon Treatment

	Expect	Actual
Carbon loading (lb org/lb carbon)	0.2-0.3	0.22
Steam Regeneration Cycles/bed	3 - 5	9 - ? (1)
Carbon Usage lb carbon/cwt HCl	0.5	? - 0.36 (1)
Bed Drying		results inconclusive to date

(1) Tests stopped after 9 cycles with no noticeable degradation of the carbon bed or its efficiency to absorb. Lower limit on carbon usage unknown.

CER 099651

CONFIDENTIAL 92-CV-204-WDS

TABLE I (cont'd)

III. Adiabatic Absorber

Dept.	Muriatic Acid Produced Organic removed	Color
246 (PCB)	70%	Clear
248 (Phenolics)	70%	Clear
(Phosphorus)	0%	
233 (Benzene)	100%	Clear
236/7 (Phenolics)	70%	Orange (1)
239 (Phenolics)	Not tested	

(1) Orange color a result of chlorophenol attack on the Haveg resin. This may pose a serious corrosion problem.

	Target	Actual
Carbon Usage (lb carbon/cwt HCl)	0.5	? - 0.2
Quality		
Appearance:	Colorless	Colorless (1)
HCl content	20.0-20.6°Be	20.0-21.5°Be
Sulfates	40 ppm, max	5-10 ppm
Chlorophenols	<5 ppm	5 ppm
Phenol	<5 ppm	(2)
Benzene/Chlorobenzene	<20 ppm	0 ppm
Cresol, CDP, TPP	<10 ppm	5-10 ppm (3)
Phosphorus	<10 ppm	20 ppm (3)
PCB	<10 ppb	10 ppb

(1) Except for chlorophenol gas

(2) Measured with chlorophenols

(3) Level not firm, depends on future work in Dept. 248 - scrubber studies.

CER 099652

PROPOSED HCl DISTRIBUTION SYSTEM

FIGURE I.

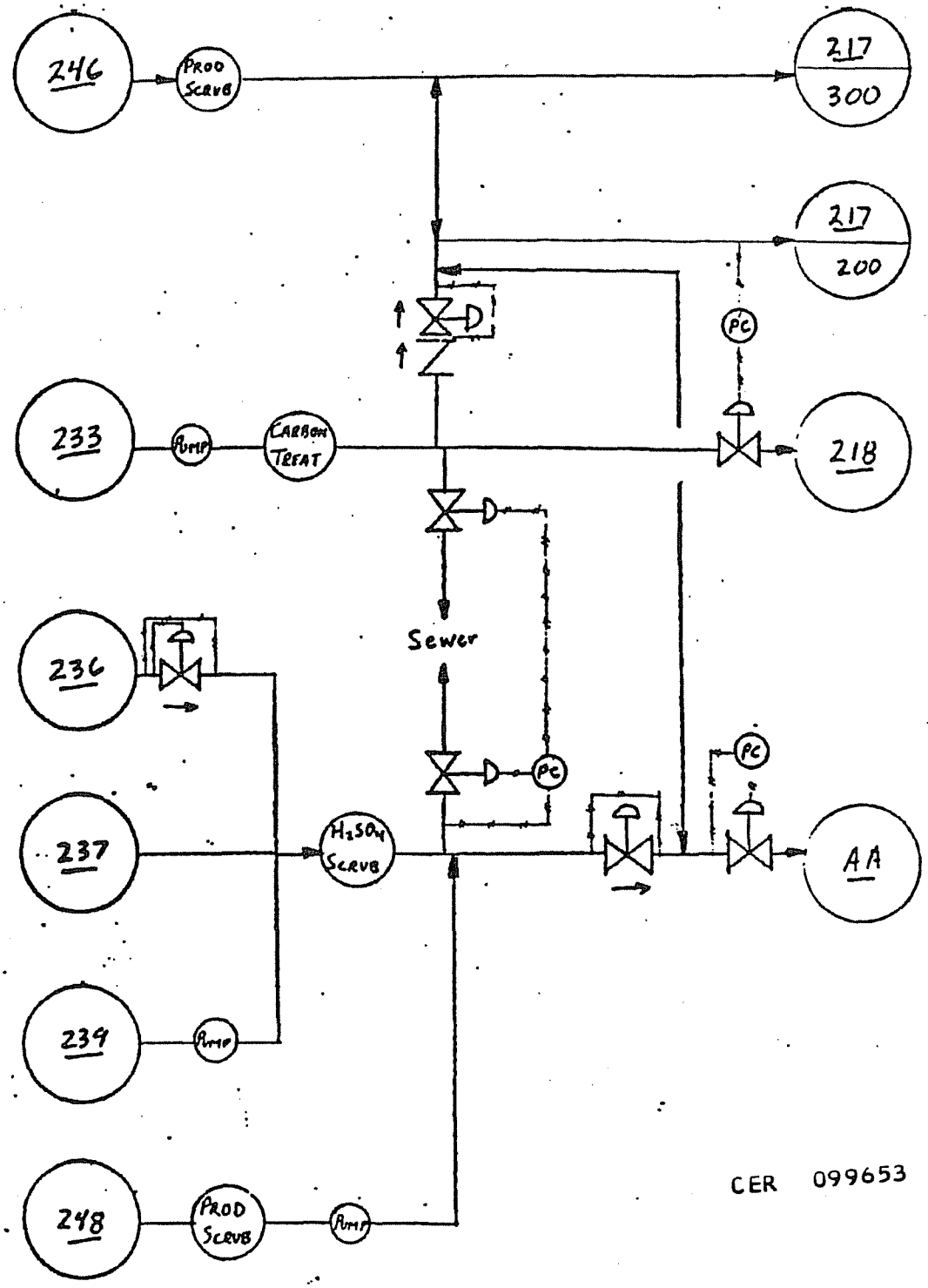

CER 099653

HARTOLDMON0007330

TABLE II

ENVIRONMENTAL EFFECTS

	Present	Proposed	% Reduction
Air Pollution (lb/day)			
Benzene	250	10	96
Soil Pollution (lb/day)	6700	5660	16
Sulfuric Acid	6600	5200	
Phenolics	100	60	
Carbon	0	400	
Stream Pollution (lb/day)	57,550	3175	95
HCl	56,900	3100	
Phenolics	40	15	
Benzene	300	60	
Phosphorus	10	0	
Carbon	300	0	

CONFIDENTIAL 92-CV-204-WDS

HARTOLDMON0007331

TABLE III

ECONOMICS

Estimated Capital	$1,100,000
HCl Clean-up Projects	$ 150,000
Vapor Phase Treatment	200,000
Adiabatic Absorber	750,000
Estimated Income	920,000
HCl Clean-up Project	20,000
Vapor Phase Treatment	50,000
Adiabatic Absorber	850,000
Estimated Operating Cost	850,000
HCl Clean-up Project	30,000
Vapor Phase Treatment	120,000
Adiabatic Absorber	700,000
Estimated Profit	70,000
Estimated ROI (B.T.)	6.4%
Estimated Additional Savings	
Treatment Plant Cost	20,000
Neutralization	200,000
TOTAL	220,000
Estimated Total Profit	290,000
Less Capital for Flow Reduction	100,000
Estimated ROI (B.T.)	29.0%

CER 099655

HARTOLDMON0007332