FILE NAME: Johns-Manville (JMA)

DATE: 1971

DOC#: JMA124

DOCUMENT DESCRIPTION: Cobra Railroad Brake Tests by J-M, Westinghouse

JOHNS-MANVILLE RESEARCH
AND ENGINEERING CENTER

Memorandum: RST 8/30

Date August 1971

COBRA PARTICULATE EMISSION INVESTIGATION
TRIP TO WESTINGHOUSE AIR BRAKE DIVISION JULY 26-30, 1971

Introduction

Recently, considerable correspondence has been exchanged between Johns-Manville Research, Westinghouse Air Brake Division, the Association of American Railroads, and the Environmental Protection Agency on the subject of possible hazardous emissions from COBRA composition railway brake shoes during use. Although toxicity in general is of interest to the AAR and the EPA, the release of asbestos dust into the atmosphere is of prime concern at the present time.

In order to provide ourselves, the AAR, and the EPA with information on this subject, a test program was set up and carried out to collect samples of COBRA wear dust under various simulated service conditions. This report describes in detail the test procedures and conditions. It does not, however, cover the analysis of the samples obtained. This will be reported separately after the samples have been analyzed for asbestos and other potentially hazardous materials.

PERSONNEL PRESENT

[illegible]	WABD	
[illegible] Adelmann	F. J. Grejda	W. C. Woodward
[illegible]	J. C. Kahr	C. McMeen
	W. F. Kosikowski	R. Gagetta
	T. A. Filar	C. Hanna

Apparatus

The Westinghouse Air Brake Division Railroad dynamometer in Wilmerding, Pa. was used to simulate various service conditions for these tests. In order to collect wear dust samples, the wheel and braking assembly of the dynamometer were completely enclosed by a sheet metal chamber. The drawings on the following pages (figures [illegible], [illegible], and 3) show the major dimensions and features of the chamber. Photographs are also included.

The chamber was equipped with inlet and outlet filters and a vacuum system to draw air through the enclosure. Air entered the chamber through an 8 in. x 10 in. Flanders type AA absolute fiber glass filter, and was drawn out through two 8 in. x 10 in. Millipore membrane filters. These were of 1.2 μ pore size (Cat. No. PAW P810 11). Air flow was provided by two Hild vacuum cleaners (one model 745 and one model 765). Each had two 1-1/2 HP motors - giving a total of 6 HP.

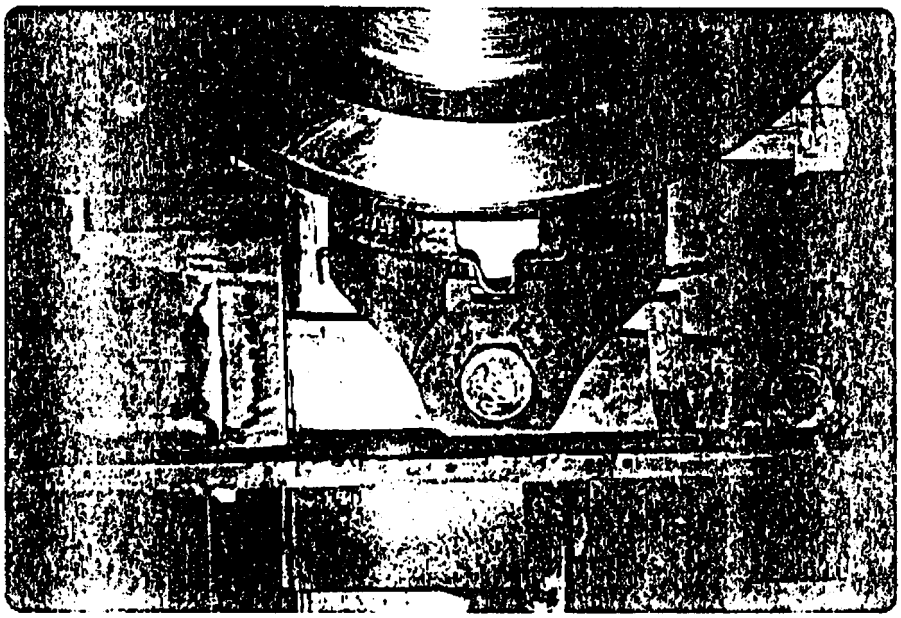

CLEANED BRAKING ASSEMBLY

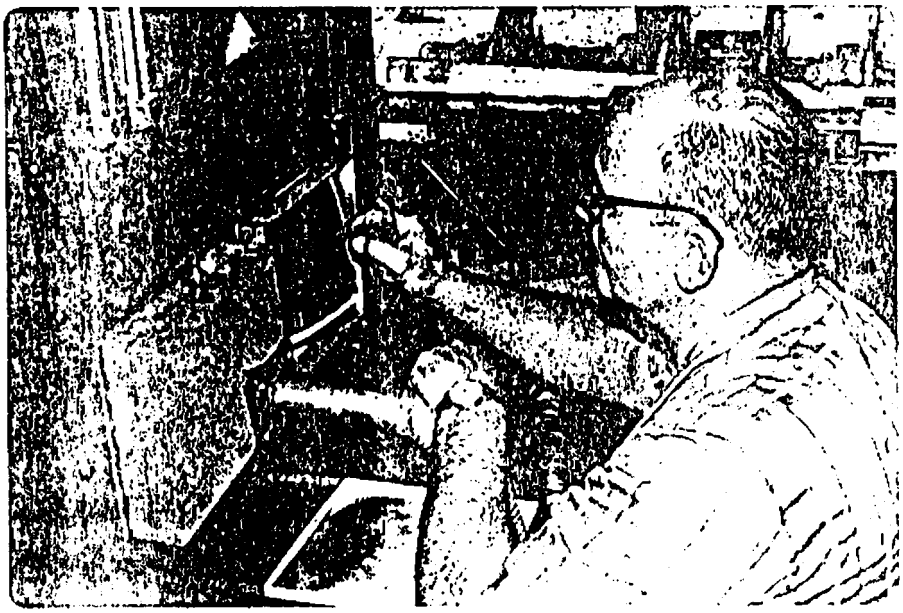

FILTER SAMPLE COLLECTION

(b) Work at Cambridge

Data on the mineral content and particle size distribution in lung material from 50 cases of exposure to asbestos dust at Rochdale has been collected together in the form of a report. Work is also proceeding to ascertain whether non-fibrous dust plays any part in the genesis of asbestosis.

Chromatographic examination of asbestosis body material has suggested strongly that the protein envelope consists of collagen. The pattern of laying down of the protein is now to be considered as this will give information of the mechanism of rupture of the envelope prior to the fracture of the fibre.

Experiments on the injection of asbestosis bodies into the brains of animals have continued. It has been shown that sterile chrysotile fibres can result in the formation of asbestosis bodies within six months and that mature but unsegmented bodies do not product any marked effects. The results on the injection of fragmented bodies are so far inconclusive. The work continues and has been extended to amosite and crocidolite fibres.

7. DUST SAMPLING AND ANALYSIS

Continued experience of the Ottway instrument has shown that the dust count obtained in a steady concentration is dependant upon the sampling time. Evidence of this has been obtained by all three Member Companies but users of the instrument who are interested in non-fibrous dusts have not experienced this difficulty. No simple reason for the phenomenon has been discovered and it is likely that the matter will not be resolved until more is known on the physics of asbestos dust clouds.

Work on mass sampling by membrane filters has commenced.

8. RESEARCH COMMITTEE'S COMMENTS

The Research Committee feels that good progress has been made during the year, but the rate of progress has been hampered by limitations of manpower. Approval has already been given for the provision of extra assistance for Dr. Holt at Reading and the new arrangements will come into force on 1st October, 1959. It is felt that in addition to expediting Dr. Holt's programme of work, this appointment will enable a start to be made on investigating the physics of asbestos dust clouds. Further proposals for expansion of the Council's Research Programme are under consideration.

FIGURE 1

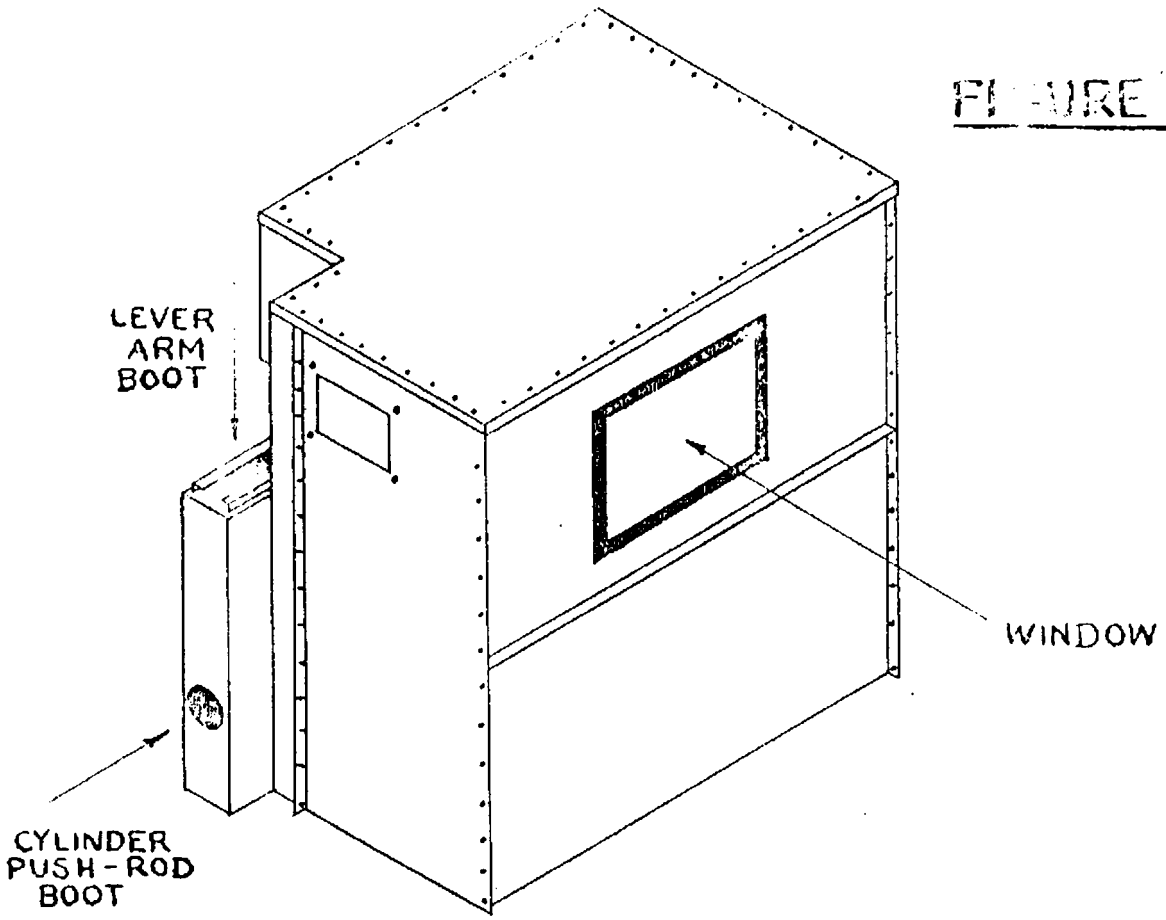

FIGURE 2

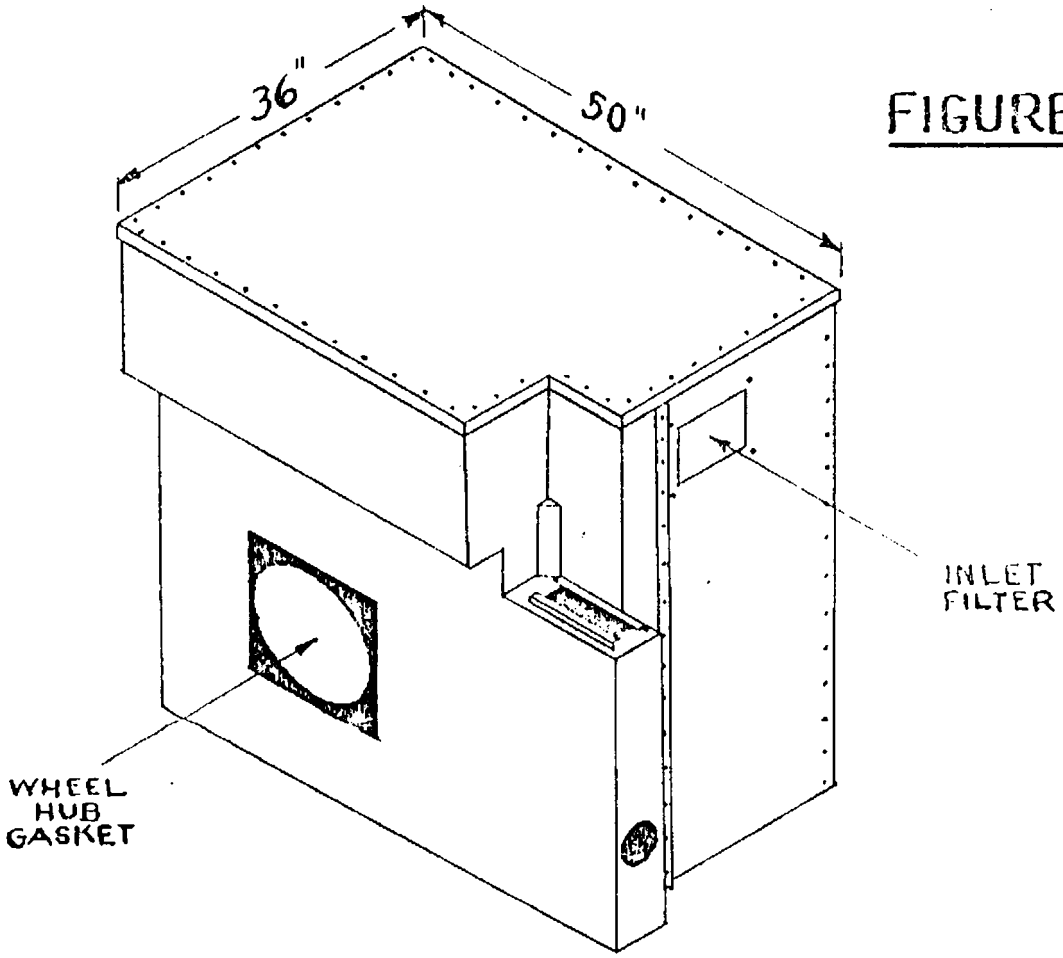

FIGURE 3

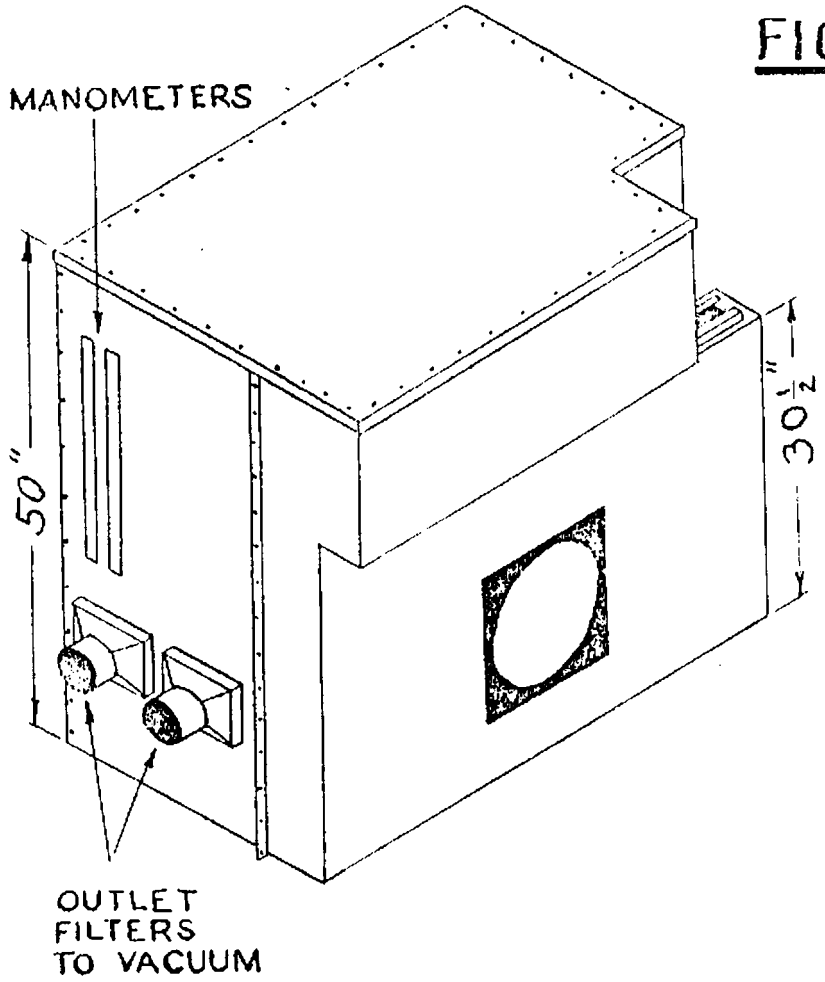

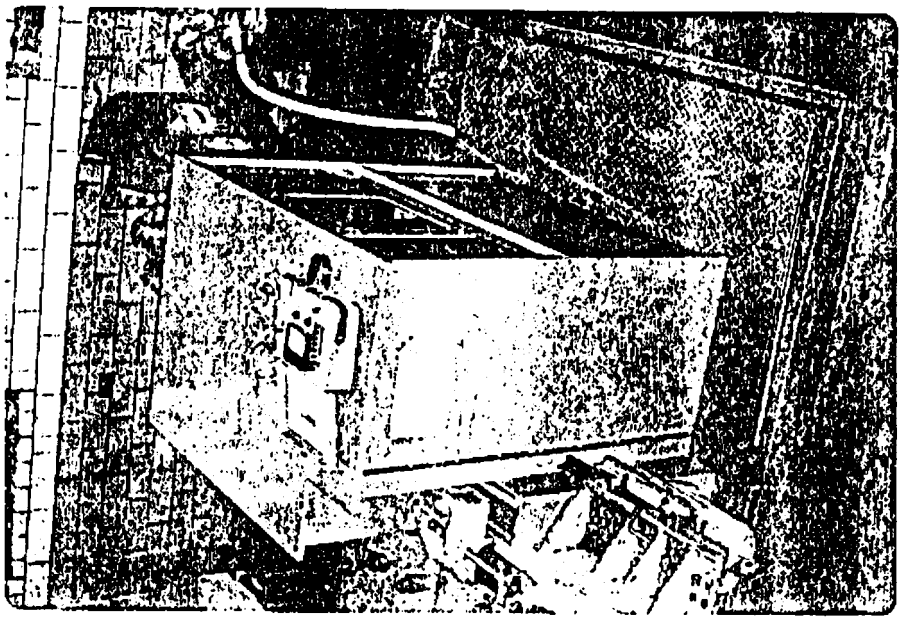

INLET END OF CHAMBER

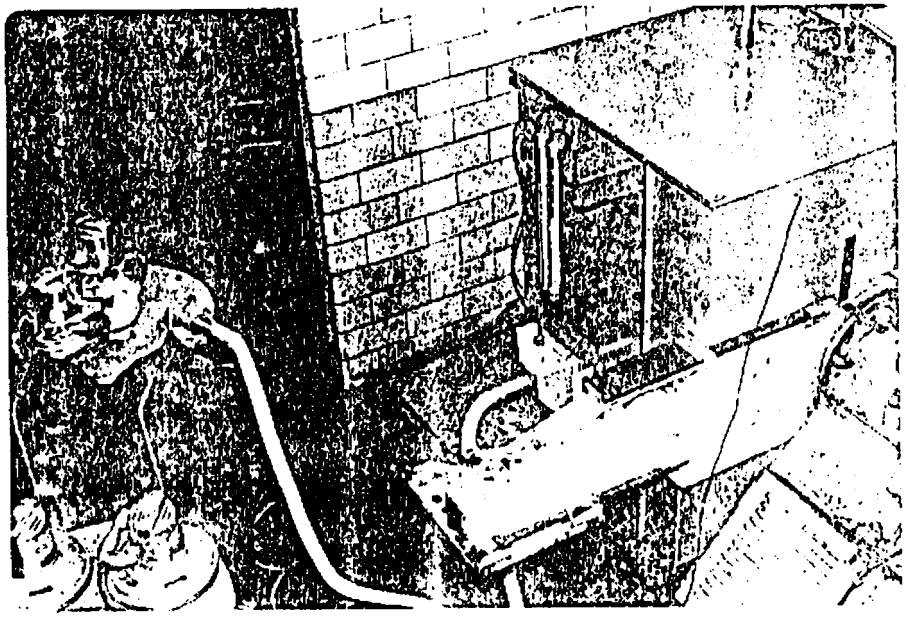

OUTLET END OF CHAMBER

Mr. E. B. Bronneman -Westinghouse
W. I. Graham - CHQ

561

Copy to FJG.

Johns-Manville

Research & Engineering Center

P. O. Box 159
Manville, N. J. 08835
(201) 722-9000

November 1, 1971
(written 10/29/71)

Mr. William J. Harris, Jr
Vice President, Association of American Railroads
Research & Test Department
American Railroads Building
1920 L Street, N.W.
Washington, DC 20036

Dear Mr. Harris:

In my letter to you of June 25, 1971, I had pointed out that wear tests would be performed on COBRA brake shoes to determine the extent to which chrysotile fiber is released during service. These tests have been conducted at the Westinghouse Air Brake Division under the supervision of JM Research personnel, and I would like to take this opportunity to inform you of the results.

The Westinghouse Air Brake Division railroad dynamometer in Wilmerding, PA was used to simulate various service conditions for these tests. In order to collect wear dust samples, the wheel and braking assembly of the dynamometer were completely enclosed by a sheet metal chamber. The chamber was equipped with inlet and outlet filters and a vacuum system to draw air through the enclosure. Air entered the chamber through a Flanders type AA absolute fiber glass filter to assure that it was "clean". Air was drawn out of the chamber through two 8-in. x 10-in. Millipore membrane filters of 1.2-u pore size. Provision was also made to measure the air flow through the chamber, the temperature in the chamber, and the temperature of the wheel tread.

Prior to each phase of testing, the interior of the chamber was washed thoroughly with mineral spirits and then wiped down with clean, dry rags. The brake head, lever arm, and bolts had been shot-blasted prior to the start of testing. These were also cleaned carefully before each test phase. All rivets were covered with metalized tape, and all welds were inspected for smoothness and integrity. The brake shoe was thoroughly brushed before weighing, and the backer plate was wire-brushed.

Four different test phases were run:

1. Passenger car simulation
2. Commuter run simulation
3. Grade simulation
4. Heavy freight simulation

Johns-Manville

Research & Engineering Center

P. O. Box 159
Manville, N. J. 08835
(201) 722-9000

At the completion of each phase all the dust in the chamber and on the Millipore exit filters was collected, combined, and submitted for chemical and electron microscopic analysis. The electron microscope was used to determine the amount of asbestos fiber in the dust.

After analysis of the composite sample for each phase, the sample was separated into airborne and non-airborne fractions by air elutriation. The results of the analysis are given below:

Results of COBRA Dust Sample Analysis

Phase	Per Cent of Sample Airborne	Per Cent Asbestos Fiber	
		Airborne Fraction	Total Sample
1	20%	0.012%	0.03%
2	20	0.008	0.02
3	7	0.001	0.03
4	12	0.003	0.05

Finally, calculations were made to determine the amounts and percentages of recognizable asbestos fiber actually liberated during the various phases. The results are as follows:

Phase	Wt. of Fiber Liberated in Entire Phase	No. of Stops in Entire Phase
1	0.006 grams	10 stops from 80 mph
2	0.003	18 stops from various speeds
3	0.016	Continuous 45-minute drag
4	0.007	20 stops from 40 mph

In general, our conclusions can be stated as follows:

1. In almost all cases less than 1.0 per cent of the original fiber in the formula remains as recognizable chrysotile fiber in the wear dust.

2. In every instance less than 0.05 per cent of the original fiber remains as recognizable in the fraction of the dust which is potentially airborne.

Johns-Manville

Research & Engineering Center

P O Box 159
Manville, N J 08835
(201) 722-9000

These results are in good agreement with the previous work on automotive brake linings. Furthermore, they substantiate the hypothesis that the extreme heat and mechanical action of the braking process is sufficient to destroy almost all the fiber as it is exposed at the wearing surface.

Please feel free to contact me if you have any questions regarding the test procedures, results, or conclusions.

Sincerely yours,

F. L. Pundsack
Vice President, Research & Development

COPY FORM	INITIALS	DATE

BOX NUMBER	SEGMENT NO.	REQUESTING PARTY
02115		Barry Cottleman

NOTES

COBRA RAILROAD BRAKE TESTS
BY J-M. WESTINGHOUSE 1971

WABCO

INTERNAL CORRESPONDENCE, WESTINGHOUSE AIR BRAKE DIVISION

DATE: December 21, 1971

TO: J. A. CAMPBELL
K. CHRISSINGER
D. F. MCCONNELL
R. A. MITCHELL
J. W. MORRIS
H. R. ODELL

FROM: G. M. Cabble

SUBJECT: ASBESTOS EMISSIONS TO THE ENVIRONMENT FROM COBRA SHOES

The Federal Government as well as some State and Local Governments have become interested in pollution caused by many things, one of which is asbestos. We have been questioned by various groups and individuals concerning the amount of asbestos fiber released by COBRA Shoes during braking action. In order to be able to answer these questions, COBRA Shoe Engineering and Johns-Manville Research combined to run an elaborate series of dynamometer tests during which all the wear dust from various types of braking cycles was collected and analyzed.

The results of these tests show that almost all of the asbestos fiber is decomposed during brake applications. Less than one percent of the original asbestos fiber in the shoe remains as fiber in the wear dust and less than one tenth of that becomes airborne. Since each stop wears only a very small amount of material from each shoe and since each shoe contains only a very small percentage of asbestos fiber, it can be seen that the amount of asbestos fiber that becomes airborne with each stop is minute.

Attached is a copy of a letter from Dr. F. L. Pundsack, Vice President/Research and Development, Johns-Manville, to Dr. W. J. Harris, Vice President/Research and Test, Association of American Railroads, and a copy of the reply. The first letter describes the tests and the results, while the reply transmits the AAR's reaction to this information. If any more detailed information regarding the tests is necessary, contact COBRA Shoe Sales.

GMC/mbs
Attach.

cc: Atlanta
Houston
Philadelphia
St. Paul
H. M. Linhart
G. E. Carothers
D. T. Kerr
E. B. Brenneman
J. C. Janke
F. J. Grejda
W. I. Graham (J-M)

Johns-Manville

Research & Engineering Center

P. O. Box 159
Manville, N. J. 08835
(201) 722-9000

At the completion of each phase all the dust in the chamber and on the Millipore exit filters was collected, combined, and submitted for chemical and electron microscopic analysis. The electron microscope was used to determine the amount of asbestos fiber in the dust.

After analysis of the composite sample for each phase, the sample was separated into airborne and non-airborne fractions by air elutriation. The results of the analysis are given below:

Results of COBRA Dust Sample Analysis

Phase	Per Cent of Sample Airborne	Per Cent Asbestos Fiber	
		Airborne Fraction	Total Sample
1	20%	0.012%	0.03%
2	20	0.008	0.02
3	7	0.001	0.03
4	12	0.003	0.05

Finally, calculations were made to determine the amounts and percentages of recognizable asbestos fiber actually liberated during the various phases. The results are as follows:

Phase	Wt. of Fiber Liberated in Entire Phase	No. of Stops in Entire Phase
1	0.006 grams	10 stops from 80 mph
2	0.003	18 stops from various speeds
3	0.016	Continuous 45-minute drag
4	0.007	20 stops from 40 mph

In general, our conclusions can be stated as follows:

1. In almost all cases less than 1.0 per cent of the original fiber in the formula remains as recognizable chrysotile fiber in the wear dust.

2. In every instance less than 0.05 per cent of the original fiber remains as recognizable in the fraction of the dust which is potentially airborne.

Johns-Manville

Research & Engineering Center

P. O. Box 159
Manville, N. J. 08835
(201) 722-9000

These results are in good agreement with the previous work on automotive brake linings. Furthermore, they substantiate the hypothesis that the extreme heat and mechanical action of the braking process is sufficient to destroy almost all the fiber as it is exposed at the wearing surface.

Please feel free to contact me if you have any questions regarding the test procedures, results, or conclusions.

Sincerely yours,

F. L. Pundsack
Vice President, Research & Development

ASSOCIATION OF
AMERICAN RAILROADS
RESEARCH AND TEST DEPARTMENT · AMERICAN RAILROADS BUILDING
1920 L STREET, N.W., WASHINGTON, D.C. 20036 · AREA CODE 202 · 293-4182

WILLIAM J. HARRIS, JR.
Vice President

cc ? !

11/15/71
cc: to [illegible] my letter to [illegible]

cc: Mr G. Cabble -West.
Mr E. Brenneman -West

November 12, 1971
W. H. Graham

J. J. RESEARCH
RECEIVED

NOV 15 1971

F. L. PUNDSACK

Mr. F. L. Pundsack, Vice President
Research and Development
Research & Engineering Center
Johns-Manville
Box 159
Manville, New Jersey 08835

Dear Mr. Pundsack:

It was very kind of you to write to me sending such helpful information on the results of wear tests on COBRA Brake Shoes.

Your studies clearly indicate the very small fraction of material which is generated as a result of the tests and also the even smaller fraction of the material which remains as recognizable chrysotile fiber in the wear dust.

I am very much hoping that we can lay this matter to rest, but there are still clouds on the horizon concerning asbestos which we shall be observing with the greatest care.

If any further developments occur that you believe warrant our attention, please write to me; and I shall do the same.

Again, I am deeply appreciative of the effort that you have expended in responding to my concerns on this subject. I sincerely hope that these efforts will allow us to be fully responsive should the need arise.

Sincerely yours,

[signature]

cc: R. Byrne, AAR
R. R. Manion, AAR
J. A. Risendal

cc to FJG

Railroad Friction Products Corporation
Wilmerding, Pennsylvania 15148

INTERNAL CORRESPONDENCE

RFP-2945

Date:	March 22, 1976
To:	W. I. Graham
From:	M. M. Farnsworth
SUBJECT:	COBRA SHOES - ASBESTOS CONTENT INSURANCE

Attached is a copy of a memorandum from Mr. Chanzis dated March 16, 1976 relating to the decision of Travelers not to renew its coverage of insurance for Railroad Friction Products Corporation. The basic $1,000,000 coverage will expire July 1, 1976; the increased coverage to $10,000,000 which became effective April 1, 1975 will expire April 1, 1976.

The decision of Travelers is based upon the asbestos content of the COBRA shoes; Travelers has decided as a matter of policy not to insure any products with asbestos content.

Also attached are copies of:

Travelers' letter of March 8 to Marsh & McLennan
Chanzis' letter of February 18 to Marsh & McLennan
My memorandum of February 16 to Chanzis
Cabble memorandum of December 21, 1971
J-M letter of November 1, 1971 to AAR
AAR letter of November 12, 1971 to J-M

all relating to asbestos emissions to the atmosphere from COBRA shoes.

Do you have any suggestions about where insurance coverage can be obtained for RFPC? Can you obtain any information about such coverage from others in the J-M organization?

MMF:CR

ATTACHMENTS

cc: E. W. Kojsza w/ copy Travelers' letter of 3/8

Johns-Manville

Research & Engineering Center

P. O. Box 159
Manville, N. J. 08835
(201) 722-9000

At the completion of each phase all the dust in the chamber and on the Millipore exit filters was collected, combined, and submitted for chemical and electron microscopic analysis. The electron microscope was used to determine the amount of asbestos fiber in the dust.

After analysis of the composite sample for each phase, the sample was separated into airborne and non-airborne fractions by air elutriation. The results of the analysis are given below:

Results of COBRA Dust Sample Analysis

Phase	Per Cent of Sample Airborne	Per Cent Asbestos Fiber	
		Airborne Fraction	Total Sample
1	20%	0.012%	0.03%
2	20	0.008	0.02
3	7	0.001	0.03
4	12	0.003	0.05

Finally, calculations were made to determine the amounts and percentages of recognizable asbestos fiber actually liberated during the various phases. The results are as follows:

Phase	Wt. of Fiber Liberated in Entire Phase	No. of Stops in Entire Phase
1	0.006 grams	10 stops from 80 mph
2	0.003	18 stops from various speeds
3	0.016	Continuous 45-minute drag
4	0.007	20 stops from 40 mph

In general, our conclusions can be stated as follows:

1. In almost all cases less than 1.0 per cent of the original fiber in the formula remains as recognizable chrysotile fiber in the wear dust.

2. In every instance less than 0.05 per cent of the original fiber remains as recognizable in the fraction of the dust which is potentially airborne.

bcc: Mr. George C[illegible]ole -Westinghouse
Mr. E. B. Brenneman -Westinghouse
W. I. Graham - CHQ

Copy to FJG

JM Johns-Manville

Research & Engineering Center

P. O. Box 159
Manville, N. J. 08935
(201) 722-9000

November 1, 1971
(written 10/29/71)

Mr. William J. Harris, Jr
Vice President, Association of American Railroads
Research & Test Department
American Railroads Building
1920 L Street, N.W.
Washington, DC 20036

Dear Mr. Harris:

In my letter to you of June 25, 1971, I had pointed out that wear tests would be performed on COBRA brake shoes to determine the extent to which chrysotile fiber is released during service. These tests have been conducted at the Westinghouse Air Brake Division under the supervision of JM Research personnel, and I would like to take this opportunity to inform you of the results.

The Westinghouse Air Brake Division railroad dynamometer in Wilmerding, PA was used to simulate various service conditions for these tests. In order to collect wear dust samples, the wheel and braking assembly of the dynamometer were completely enclosed by a sheet metal chamber. The chamber was equipped with inlet and outlet filters and a vacuum system to draw air through the enclosure. Air entered the chamber through a Flanders type AA absolute fiber glass filter to assure that it was "clean". Air was drawn out of the chamber through two 8-in. x 10-in. Millipore membrane filters of 1.2-u pore size. Provision was also made to measure the air flow through the chamber, the temperature in the chamber, and the temperature of the wheel tread.

Prior to each phase of testing, the interior of the chamber was washed thoroughly with mineral spirits and then wiped down with clean, dry rags. The brake head, lever arm, and bolts had been shot-blasted prior to the start of testing. These were also cleaned carefully before each test phase. All rivets were covered with metalized tape, and all welds were inspected for smoothness and integrity. The brake shoe was thoroughly brushed before weighing, and the backer plate was wire-brushed.

Four different test phases were run:

1. Passenger car simulation
2. Commuter run simulation
3. Grade simulation
4. Heavy freight simulation ;

American Standard

INTER-OFFICE CORRESPONDENCE

date:

to: N. B. Chanzis
unit: Risk Management Department
location: New York

from: M. M. Farnsworth
unit: Transportation Systems Group
location: Pittsburgh

February 16, 1976

subject: RAILROAD FRICTION PRODUCTS CORPORATION
ASBESTOS EMISSIONS

Referring to our discussions on February 12, I enclose two (2) copies of each of the following:

G. M. Cabble memorandum dated December 21, 1971

F. L. Pundsack letter dated November 1, 1971 to William J. Harris

W. J. Harris letter dated November 12, 1971 to F. L. Pundsack

all relating to asbestos emissions to the atmosphere from Cobra shoes.

Also enclosed are two (2) copies of Johns-Manville report No. E456-2618 entitled Cobra Shoe Toxic Fume Investigation.

As I mentioned to you, the person in the WABCO organization who may be contacted for information in this matter is Mr. E. W. Kojsza, Manager, Cobra Shoe Engineering. He is in the Engineering Department of Westinghouse Air Brake Division, Wilmerding, Pa.

The documents relating to asbestos emissions concern only the emissions from the shoes after they have been delivered by RFPC to the railroads/mass transit systems for use on rolling stock. That is, as I see it, the only place that RFPC would become involved in and have liability for asbestos emissions.

The documents do not concern the asbestos emissions during the manufacturing operations by which Cobra shoes are produced. Those operations are performed by J-M in J-M facilities; J-M manufactures Cobra shoes to RFPC specifications under contract with RFPC.

Enclosures

cc: E. W. Kojsza w/o enclosures

WABCO

INTERNAL CORRESPONDENCE / WESTINGHOUSE AIR BRAKE DIVISION

DATE: December 21, 1971

TO: J. A. CAMPBELL
K. CHRISSINGER
D. F. MCCONNELL
R. A. MITCHELL
J. W. MORRIS
H. R. ODELL

FROM: G. M. Cabble

SUBJECT: ASBESTOS EMISSIONS TO THE ENVIRONMENT FROM COBRA SHOES

The Federal Government as well as some State and Local Governments have become interested in pollution caused by many things, one of which is asbestos. We have been questioned by various groups and individuals concerning the amount of asbestos fiber released by COBRA Shoes during braking action. In order to be able to answer these questions, COBRA Shoe Engineering and Johns-Manville Research combined to run an elaborate series of dynamometer tests during which all the wear dust from various types of braking cycles was collected and analyzed.

The results of these tests show that almost all of the asbestos fiber is decomposed during brake applications. Less than one percent of the original asbestos fiber in the shoe remains as fiber in the wear dust and less than one tenth of that becomes airborne. Since each stop wears only a very small amount of material from each shoe and since each shoe contains only a very small percentage of asbestos fiber, it can be seen that the amount of asbestos fiber that becomes airborne with each stop is minute.

Attached is a copy of a letter from Dr. F. L. Pundsack, Vice President/Research and Development, Johns-Manville, to Dr. W. J. Harris, Vice President/Research and Test, Association of American Railroads, and a copy of the reply. The first letter describes the tests and the results, while the reply transmits the AAR's reaction to this information. If any more detailed information regarding the tests is necessary, contact COBRA Shoe Sales.

GMC/mbs
Attach.

cc: Atlanta
Houston
Philadelphia
St. Paul
H. M. Linhart
G. E. Carothers
D. T. Kerr
E. B. Brenneman
J. C. Janke
F. J. Grejda
W. I. Graham (J-M)

ASSOCIATION OF
AMERICAN RAILROADS
RESEARCH AND TEST DEPARTMENT · AMERICAN RAILROADS BUILDING
1920 L STREET, N.W., WASHINGTON, D.C. 20036 · AREA CODE 202 - 293 4182

WILLIAM J. HARRIS, JR.
Vice President

cc ? ?

11/15/71
cc: to [illegible] my letter to [illegible]

cc: Mr G. Cabble -West.
Mr E. Brenneman -West

November 12, 1971
W. H. Graham

J. E. RESEARCH
RECEIVED

NOV 15 1971

F. L. PUNDSACK

Mr. F. L. Pundsack, Vice President
Research and Development
Research & Engineering Center
Johns-Manville
Box 159
Manville, New Jersey 08835

Dear Mr. Pundsack:

It was very kind of you to write to me sending such helpful information on the results of wear tests on COBRA Brake Shoes.

Your studies clearly indicate the very small fraction of material which is generated as a result of the tests and also the even smaller fraction of the material which remains as recognizable chrysotile fiber in the wear dust.

I am very much hoping that we can lay this matter to rest, but there are still clouds on the horizon concerning asbestos which we shall be observing with the greatest care.

If any further developments occur that you believe warrant our attention, please write to me; and I shall do the same.

Again, I am deeply appreciative of the effort that you have expended in responding to my concerns on this subject. I sincerely hope that these efforts will allow us to be fully responsive should the need arise.

Sincerely yours,

W. H. Harris

cc: R. Byrne, AAR
R. R. Manion, AAR
J. A. Risendal

cc to FJG

Johns-Manville

Research & Engineering Center

P. O. Box 159
Manville, N. J. 08835
(201) 722-9000

At the completion of each phase all the dust in the chamber and on the Millipore exit filters was collected, combined, and submitted for chemical and electron microscopic analysis. The electron microscope was used to determine the amount of asbestos fiber in the dust.

After analysis of the composite sample for each phase, the sample was separated into airborne and non-airborne fractions by air elutriation. The results of the analysis are given below:

Results of COBRA Dust Sample Analysis

Phase	Per Cent of Sample Airborne	Per Cent Asbestos Fiber	
		Airborne Fraction	Total Sample
1	20%	0.012%	0.03%
2	20	0.008	0.02
3	7	0.001	0.03
4	12	0.003	0.05

Finally, calculations were made to determine the amounts and percentages of recognizable asbestos fiber actually liberated during the various phases. The results are as follows:

Phase	Wt. of Fiber Liberated in Entire Phase	No. of Stops in Entire Phase
1	0.006 grams	10 stops from 80 mph
2	0.003	18 stops from various speeds
3	0.016	Continuous 45-minute drag
4	0.007	20 stops from 40 mph

In general, our conclusions can be stated as follows:

1. In almost all cases less than 1.0 per cent of the original fiber in the formula remains as recognizable chrysotile fiber in the wear dust.

2. In every instance less than 0.05 per cent of the original fiber remains as recognizable in the fraction of the dust which is potentially airborne.

Johns-Manville

Research & Engineering Center

P. O. Box 159
Manville, N. J. 08835
(201) 722-9000

These results are in good agreement with the previous work on automotive brake linings. Furthermore, they substantiate the hypothesis that the extreme heat and mechanical action of the braking process is sufficient to destroy almost all the fiber as it is exposed at the wearing surface.

Please feel free to contact me if you have any questions regarding the test procedures, results, or conclusions.

Sincerely yours,

F. L. Pundsack
Vice President, Research & Development