In applying reduced voltage starters to synchronous motors it should be remembered that, since these motors are started on damper windings and function during the acceleration period similarly to squirrel-cage motors, the starting torque varies as the square of the applied voltage. Consideration should be given to insure development of sufficient motor torque to accelerate the load.

Multi-Speed control may be either manual or magnetic, and at full or reduced voltage. When using automatic magnetic control with two-, three-, and four-speed separate winding or consequent pole motors, control may be obtained from a remote point by means of a push button master switch. The various speeds of the motor are obtained from the master switch by simply depressing the correct push button. This is known as selective speed control. It is commonly used in the smaller theater installations where the fan and motor are located backstage and the speed control is located in the lobby.

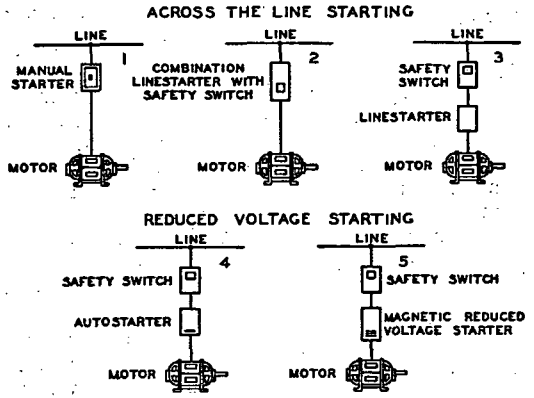

Arrangements 2, 4 and 5 provide automatic push-button starting.

FIG. 7. RECOMMENDED CONTROLS FOR SQUIRREL-CAGE MOTORS

Multi-speed motor controllers may be provided with compelling relays which make it necessary for the operator to press the first speed button before regulating the motor to the desired speed. This insures that the motor is always started at low speed before adjusting to a higher speed.

Timing relays which provide for automatic acceleration may be used for control. With this feature the motor will always start at low speed and automatically accelerate to the desired speed. Decelerating relays may be used to reduce the shock effect of the braking action on the motor and drive when the speed is reduced from a higher to a lower speed.

Single Phase motor control usually consists only of a linestarter, either manual or magnetic. In some cases it is desirable also to provide a disconnect switch. Fig. 9 illustrates the recommended controls.

MOTOR RATING

The rating of an electric motor depends upon the total temperature which the motor attains under operating conditions. This total temperature depends on both the ambient temperature and the temperature rise of the motor. As motor temperature rise is in turn determined by the ability of the motor to dissipate heat, circulation to the motor should not

be restricted. Improper selection of motors with regard to temperature ratings may result in high motor operating temperatures and accompanying reduction in motor life.

FUNCTIONS OF CONTROL EQUIPMENT FOR MOTORS

In general, control equipment for all types of motors should provide (1) means of disconnecting the motor from the power supply, (2) means for starting the motor, (3) overload protection for the motor, (4) protection against low voltage, and (5) means for varying the motor speed.

Full voltage starting for motors is preferable because of its lower first cost and simplicity of control. Except for d-c machines, most motors are mechanically and electrically designed for full voltage starting. The starting inrush current, however, is limited in many cases by regulations of power companies because of the voltage fluctuations which may be caused by heavy current surges. It is therefore often necessary to reduce

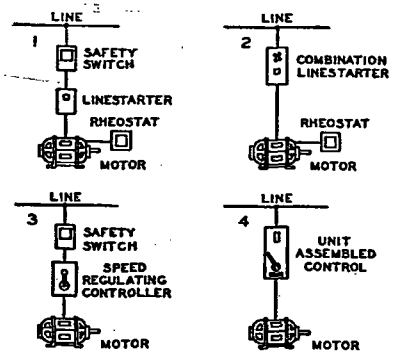

FIG. 8. RECOMMENDED CONTROLS FOR WOUND ROTOR MOTORS

the starting current below that obtained by across-the-line starting. The power supplier should be consulted to determine the allowable inrush current for any given location.

The choice between full voltage and reduced voltage starting is governed almost entirely by inrush current limitations. The starting torque of all motors varies with the starting current, and it is therefore necessary to insure that the motor is supplied with sufficient current to develop enough torque to accelerate the load.

In present practice overload protection of motors is obtained by use of thermal overload inverse time limit type protection. The usual setting of such protection devices is not to exceed 125 percent of rated full load current for open 40 C rise motors, and not to exceed 115 percent of rated full load current for all other motors, the element tripping after a definite interval of time. The *National Electrical Code* requires the addition of fuses or circuit breakers to protect the overload elements from severe short circuit currents.

Two types of protection are available against low voltage at the motor terminals. One type, called low voltage release, permits the motor line contactor to drop out on low voltage and to close again when the voltage returns to normal, thereby restarting the motor when the abnormal condi-