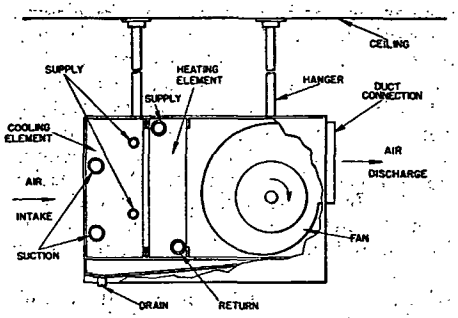

FIG. 1. HORIZONTAL REMOTE TYPE UNIT AIR CONDITIONER

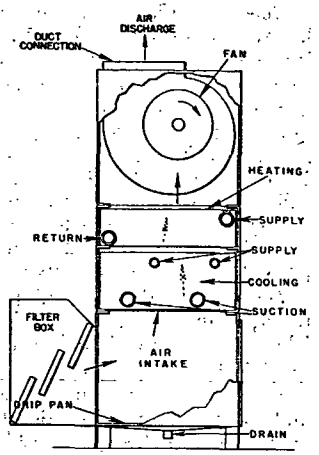

FIG. 2. VERTICAL REMOTE TYPE UNIT AIR CONDITIONER

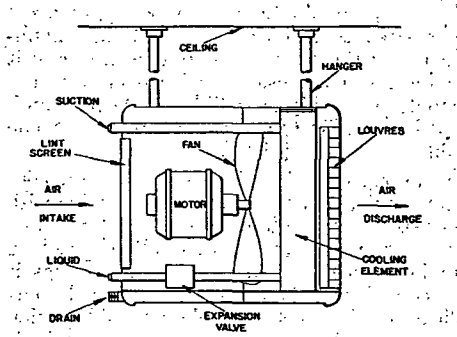

FIG. 3. SUSPENDED PROPELLER FAN TYPE UNIT AIR CONDITIONER

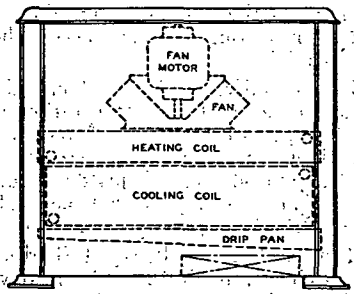

FIG. 5. REMOTE FLOOR TYPE ROOM UNIT AIR CONDITIONER

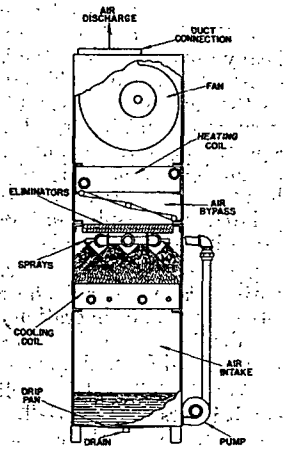

FIG. 4. SPRAY TYPE REMOTE UNIT AIR CONDITIONER

should be used if face velocities exceed 500 to 530 fpm, unless adequate means of catching the droplets are provided.

When air is drawn upward through dehumidifying coils, as in some vertical units, water is entrained within the fins and held in suspension. This increases the resistance pressure against which the blower operates, and results in wide variation in air volumes handled between dry and wet coil conditions. Some unit manufacturers have so designed vertical units that the air passes through the coils horizontally in order to overcome this difficulty.

Heating Coils. Heating coils of unit air conditioners are usually conventional blast coils, and can be obtained with or without non-freeze steam distribution features. They usually match the cooling coils in face area, and are one or two rows deep depending on the heating requirements. Where coils are selected for hot water and have more than two rows of tubes, the air resistance and the space requirements of the total number of rows of cooling and heating coils should be carefully checked.

Humidification. Spray type humidifiers are usually used in remote systems, but in some cases pan type humidifiers or steam humidifiers are also used. Some condensation on the inside of the unit casing may occur with possible water damage if the unit is located in a cold space without adequate insulation. Spray type humidifiers should be located so that no carryover of moisture occurs.

Filters. It is almost axiomatic that all units should have filters. Some small suspended units of 1 ton capacity or less, with low coil face velocities and propeller fans, are equipped only with lint screens or operate without filters, but in them the coils must be periodically cleaned and there is constant danger of clogging of the drain, with the possibility of water damage. Filters used are usually of the throw-away type, although cleanable filters are available for most of the larger units. Care should be taken to insure adequate filter surface, since the cross-sectional area of the unit is seldom adequate for filter area. V-shaped or staggered filter arrangements are quite commonly used to increase filter area.

Motors. In some units where the motor is mounted inside, adequate access for maintenance and clearance for tightening belts are imperative. When motors are mounted in this manner, the heat equivalent of the motor input must be added to the heat load to be absorbed by the system, and this requires a lower exit air temperature at the coils. Usually, however, the motor is located outside of the casing where it is readily accessible for service. In this case, only the brake horsepower required by the fan is transformed into heat to be included in the load calculations.

In either application, motors should be selected with adequate horsepower to handle the design volume of air against the resistance of the system when the coils are wet, and then checked against the possible horsepower requirements for the increased volume of air obtained when the coils are dry.

SOUND ISOLATION

Both suspended and vertical floor mounted units can transmit vibration through the supports. Wherever such transmission of sound might be objectionable, the supports should be isolated through rubber-in-shear or other sound deadeners (for design of suitable sound deadeners see section Controlling Vibration from Machine Mountings in Chapter 40).