FURNACES

Furnaces for mechanical warm air systems may be made of cast-iron, steel, or alloy. Cast-iron furnaces are usually made in sections and must be assembled and cemented or bolted together on the job. Steel furnaces are made with welded or riveted seams. The proper design of the furnace depends largely on the kind of fuel to be burned. Accordingly, various manufacturers are making special units for coal, oil and gas. Each type of fuel requires a distinct type of furnace for highest efficiency and economy, substantially as follows:

1. Coal Burning:
   - *a. Bituminous*—Large combustion space with easily accessible secondary radiator or flue travel.
   - *b. Anthracite or coke*—Large fire box capacity and liberal secondary heating surfaces.
2. Oil Burning:
   - *a.* Liberal combustion space.
   - *b.* Long fire travel and extensive heating surface.
3. Gas Burning:
   - *a.* Extensive heating surface.
   - *b.* Close contact between flame and heating surface.

A combustion rate of from 5 to 8 lb of coal per square foot of grate per hour is recommended for residential heaters. A higher combustion rate is permissible with larger furnaces for buildings other than residences, depending upon the ratio of grate surface to heating surface, firing period, and available draft.

Where oil fuel is used, care must be exercised in selecting the proper size and type of burner for the particular size and type of furnace used. It is recommended that the system be designed for blow-through installations, so that the furnace shall be under external pressure in order to minimize the possibility of leakage of the products of combustion into the air circulating system.

In residential furnaces for coal burning, the ratio of heating surface to grate area will average about 20 to 1; in commercial sizes it may run as high as 50 to 1, depending on fuel and draft. Furnaces may be installed singly, each furnace with its own fan, or in batteries of any number of furnaces, using one or more fans.

Furnace Casings

Casings are usually constructed of galvanized iron, 26-gage or heavier, but they may also be constructed of brick. Galvanized iron casings should be lined with sheet iron liners, extending from the grate level to the top of the furnace and spaced from 1 in. to 1½ in. from the outer casing. Casings for commercial or heavy duty furnaces, if built of galvanized iron, should be insulated with fireproof insulating material at least 2 in. thick. It is generally believed that either brick or sheet metal casing should be equipped with baffles to secure impingement of the air to be heated against the heating surfaces. Brick furnace casings should be supplied with access doors for inspection.

For furnace casings sized for gravity flow of air, where a fan is to be

used, many manufacturers recommend the use of special baffles to restrict the free area within the casing and to force impingement of the air against the heating surfaces. The method of making these baffles for furnaces with top horseshoe radiators and for furnaces with back crescent radiators is illustrated in Fig. 1.

Either square or round casings may be used. Where square casings are

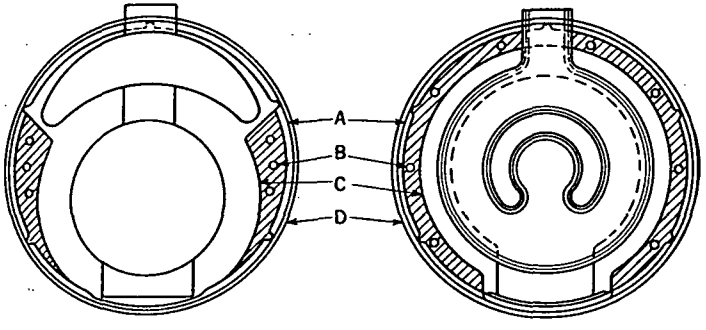

FIG. 1. USUAL METHOD OF BAFFLING ROUND CASINGS FOR FAN FURNACE WORK

A. Liner, 1 in. from casing. *B.* Hole to vent baffle. *C.* Baffle, closed top and bottom. *D.* Outer casing.

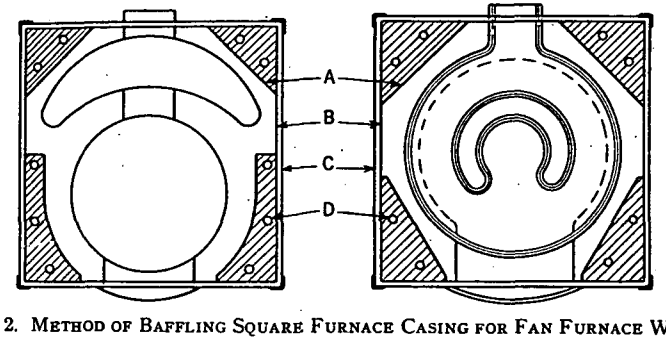

FIG. 2. METHOD OF BAFFLING SQUARE FURNACE CASING FOR FAN FURNACE WORK

A. Baffle, closed top and bottom. *B.* Liner, 1 in. from casing. *C.* Outer casing. *D.* Hole to vent baffle.

used, the corners must be baffled to reduce the net free area and to force impingement of air against the heating surfaces. Fig. 2 shows the usual method of baffling square furnace casings for fan furnace work.

The hood or bonnet of the casing above the furnace should be as high as basement conditions will allow, to form a plenum chamber over the top of the furnace. This tends to equalize the pressure and temperature of the air leaving the bonnet through the various openings. It is generally considered advisable to take off the warm air pipes from the side of the bonnet near the top, as this method of take-off allows the use of a higher bonnet