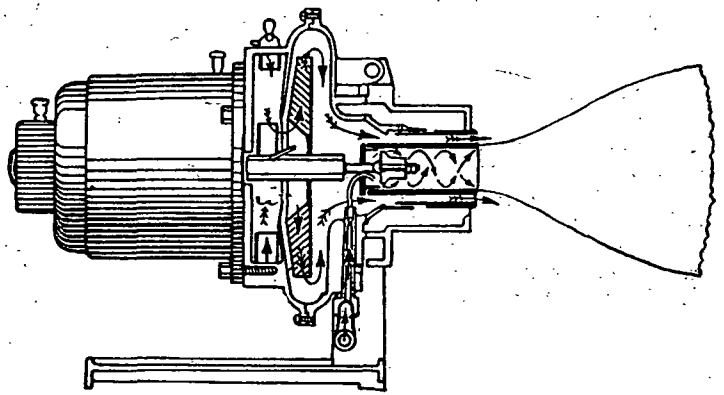

FIG. 16. HORIZONTAL ROTATING CUP OIL BURNER

pilot fire can be increased to give almost any desired control characteristic within the range of the burner. The majority of vaporizing burners are manufactured in sizes up to one gallon per hour input. Most vaporizing burners are limited to use with No. 1 fuel oil having a maximum end point of 625 F and a minimum A.P.I. gravity of 35 deg.

A barometric draft regulator is required to maintain the recommended draft. A draft of not more than 0.06 in. of water column is recommended for most natural draft burners. When burners are equipped with mechanical forced draft, a slightly lower chimney draft can be used. A burner of this type is illustrated in Fig. 17.

Vaporizing burners are adaptable to water heaters, space heaters, and furnaces. Some types have also been applied successfully to conversion installations. The heat output is in the range of requirements for the average or small home.

The modulating flame allows simple manual control by regulation of a metering valve, and simplifies the control equipment. Quiet combustion and the absence of moving parts contribute to quiet operation when the heating device is located in the living quarters.

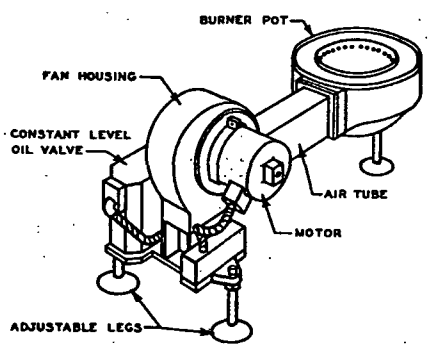

FIG. 17. VAPORIZING POT-TYPE BURNER

The ability to operate on natural draft and gravity feed of the fuel, makes possible the use of these burners where electric current is not available or is unreliable. However, most furnaces are thermostatically controlled, and many are provided with mechanical draft.

Oil-Fired Boiler and Furnace Units

A number of types of specially designed oil-fired boiler-burner and furnace-burner units are available. Various locations of burners will be noted in such units; some having the combustion chamber and burner at the top, some at the bottom, and some at the center of the appliance. One type of boiler-burner unit is shown in Fig. 18. The coordinated design of boiler (or furnace) and burner elements insures the optimum in operating characteristics, and the maintenance of balanced performance. This type of equipment usually has more heating surface, and better flue proportions and gas travel than conventional boilers or furnaces. Some

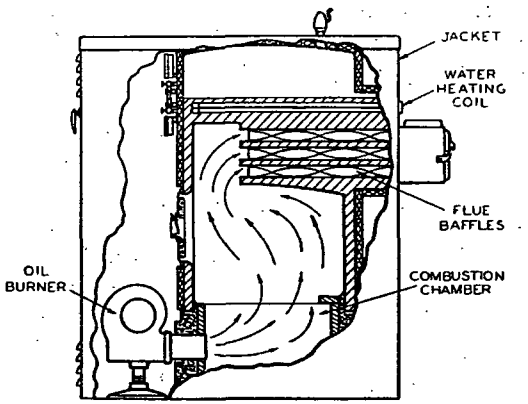

FIG. 18. TYPICAL BOILER-BURNER UNIT

of the better conversion installations, however, may equal the unit type in performance.

Operating Requirements for Oil Burners

The U. S. Department of Commerce, in conjunction with the oil burner and heating appliance industries, has established commercial standards for conversion burners and burner-appliance units which cover installation, construction and performance tests.[4]

Combustion Process

Efficient combustion must produce a clean flame and use a relatively small excess of air, *i.e.*, between 25 and 50 percent. This can be done only by vaporizing the oil quickly and completely, and mixing it vigorously with air in a combustion chamber hot enough to support the combustion. A vaporizing burner prepares the oil for combustion by transforming the liquid fuel to the gaseous state by the application of heat before the oil vapor mixes with air to any extent and, if the air and oil vapor temperatures are high and the fire pot hot, a clear blue flame is produced.