OPERATING MANUAL

D - 745 PVC REACTORS

ABERDEEN, MISSISSIPPI

OCTOBER, 1981

See III

Vernon L. Thornhill
Senior Process Engineer

J. E. Barton
Vinyl Expansion Coordinator

TABLE OF CONTENTS

OPERATING MANUAL

D-745 PVC REACTORS

ABERDEEN, MISSISSIPPI

	Page No.
I. INTRODUCTION	
A. Operator Responsibilities	1
B. Process Information	3
1. Evacuation	
2. Charge	
3. Initiator	
4. Polymerization	
5. Recovery and Steam Stripping	
6. Dumping	
II. GENERAL PROCESS DESCRIPTION	
A. Evacuation	5
B. Charge	5
1. Precharge Preparations	
2. Reactor Charge	
C. Polymerization	9
D. Recovery and Steam Stripping	12
1. Recovery	
2. Steam Stripping	
3. Hydroquinone Injection	
4. Recovery of Blowdown Tank	
E. Reactor Dump and Rinse	16
F. Chem Wash and Rinse	17
G. Water Swirl	19
H. Water Collection System	19
III. OPERATING PROCEDURES	
A. Reactor Evacuation	20
B. Reactor Precharge	24
1. Lead Operator Duties	
2. "A" Operator Duties	

Table of Contents
Operating Manual
D-745 PVC Reactors
Page 2

	Page No.
III. OPERATING PROCEDURES (CONTINUED)	
C. Reactor Charge	28
D. Polymerization 1. Lead Operator Duties 2. "A" Operator Duties 3. Emergency Shutdown	33
E. Recovery and Steam Stripping 1. "A" Operator Duties 2. Lead Operator Duties 3. Recovery System Troubleshooting	39
F. Reactor Dump and Rinse 1. "A" Operator Duties 2. Lead Operator Duties	46
G. Chem Wash and Rinse	48
H. Full and Partial Swirl 1. Full Swirl 2. Partial Swirl	52
I. Colloid Solution Makeup 1. Lead Operator Duties 2. "A" Operator Duties	53
J. Hydroquinone Solution Makeup 1. Lead Operator Duties 2. "A" Operator Duties 3. Safety Precautions	58
K. Used Chem Wash Solution Disposal	60
L. Initiator Handling and Storage 1. Safety Precautions in Handling 2. Physical Characteristics 3. Initiator Storage Freezers 4. Design and Operational Functions 5. Daily Operational Checks 6. Emergency Procedure for Catalyst Freezers 7. Circle Chart Responsibility and Change Schedule	61

Table of Contents
Operating Manual
D-745 PVC Reactors
Page 3

		Page No.
III.	OPERATING PROCEDURES (CONTINUED)	
	M. Reactor Pressure Check	70
	N. Reactor Cleaning and Entry 1. Reactor Manhead Opening Procedures 2. Reactor Cleaning and Entry	72
	O. Housekeeping Guidelines	77
IV.	EQUIPMENT INDEX	78
V.	INSTRUMENT INDEX	114
VI.	ALARMS AND SAFETY EQUIPMENT	
	A. Continuous Flow Fresh Air System	120
	B. Alarms and Switches	123
	C. Firewater System 1. Fire Monitors 2. Hydrocarbon Analyzers 3. Deluge System	131
	D. Fixed Point Monitors	132
VII.	EQUIPMENT OPENING PROCEDURES	133
VIII.	APPENDIX	
	A. Equipment List	
	B. Instrument List	
	C. P & I Diagrams	

INTRODUCTION

VAB.0001146641

OPERATING MANUAL

D-745 PVC REACTORS

ABERDEEN, MISSISSIPPI

I. INTRODUCTION

A. Operator Responsibilities

The purpose of this plant is to safely and economically convert vinyl chloride monomer (VCM) into a useable form of poly vinyl chloride (PVC). This is accomplished by a batch process in which VCM, water, initiator and colloid solution are charged into the reactor and under carefully controlled conditions, PVC with the desired physical properties is produced. This chemical reaction, which changes VCM to PVC, is called polymerization.

The operator helps fulfill the plant's purpose by making sure that quality production is obtained from his equipment without endangering his fellow workers or his equipment. The operator is able to attain his goals in safety, job performance and efficient operation through a training period and on the job experience and passing a written exam.

The operator fulfills his responsibilities by:

1. Demonstrating understanding of how his equipment functions.
2. Being able to explain what role each piece of equipment plays in the process.
3. Keeping a close and regular check on equipment.
4. Being able to demonstrate trouble shooting and corrective measures.
5. Keeping his area of responsibility safe and clean.
6. Keeping complete and accurate records.

I. INTRODUCTION (CONTINUED)

A. Operator Responsibilities (Continued)

The operating Manual will cover the normal responsibilities and duties of the Lead Operator and the Reactor "A" Operator. Each phase in the production method will be covered. In addition to normal operating methods, it will also discuss operations under abnormal and emergency conditions. The operator must be prepared to meet these situations with temporary measures until the abnormal condition is corrected or the emergency crisis ceases to exist.

The safety of the plant personnel and equipment is to be carefully considered before any job is started. The Conoco safety slogan, "our work is never so urgent or important that we cannot take time to do it safely", is an idea that can help make the work area safer for everyone when it is put into practice.

Good housekeeping is also an important responsibility of the operators. It requires careful attention for safety reasons and to maintain good working conditions. Cleaning up after job completion is the responsibility of the person doing the job. A job should not be considered complete until all materials are picked up and properly stored.

I. INTRODUCTION (Cont.)

B. Process Information

Several types of resins are produced. Resin type is determined by a set of physical properties such as particle size and viscosity Each type of resin produced requires that a certain set of operating conditions be closely followed so that the desired resin properties are obtained. Minor changes in formulas or operating conditions can cause major differences in the physical properties of the resin. Some factors in determining resin properties are reaction temperature, which helps determine viscosity, colloid, which influences particle size, and the amount of recovered VCM charged, which also effects particle size, amount of short-stop which effects stability and amount of calcium stearate which effects drying and customer processing.

The phases of reactor operation and a brief description of each follows:

1. Evacuation

This step removed all air possible by steam ejectors. Too much air left in a reactor will alter particle size. Evacuation should require about five minutes.

2. Charge

Water, Colloid and VCM are charged to the reactor simultaneously through a timed sequence system. The temperature of the reactor contents at the end of charging is determined by the charge water temperature. The reactor will be below run temperature at the end of the charge and jacket steam will be used to raise the temperature to the desired level. Charge should take about nine minutes for D-741, D-742, D-743, and D-744. D-745 will require about fifteen minutes to charge.

I. INTRODUCTION (Cont.)

B. Process Information (Cont.)

3. Initiator

The initiator is manually loaded into the initiator injection pot and charged into the reactor after reactor charge is complete.

4. Polymerization

This is the time from the initiator addition until most of the VCM has been converted to resin. The reaction generates heat continuously as liquid VCM becomes PVC resin. Heat that is generated is removed by cooling water on the reactor jacket and condenser. Reaction time varies, but generally requires five to six hours for D-741, D-742, D-743, and D-744. D-745 will require about 4½ to five hours.

5. Recovery and Steam Stripping

Recovery and steam stripping removes most of the unreacted VCM from the reactor via a compressor-vacuum pump system. Steam is added to the bottom of the reactor and rises through the PVC and water slurry to help remove unreacted VCM. Recovery and steam stripping takes about 60 minutes for D-741, D-742, D-743, and D-744 with D-745 taking about 90 minutes to recover and strip.

6. Dumping

The PVC resin, after reaction is complete, is in a slurry form. The slurry is dumped to a sweco and dump tank and is pumped to blend tanks in the Dryer Room for drying. Dump requires about 25 minutes for D-741, D-742, D-743, and D-744 and 35 minutes for D-745.

I. INTRODUCTION (CONTINUED)

A. Operator Responsibilities (Continued)

The operating Manual will cover the normal responsibilities and duties of the Lead Operator and the Reactor "A" Operator. Each phase in the production method will be covered. In addition to normal operating methods, it will also discuss operations under abnormal and emergency conditions. The operator must be prepared to meet these situations with temporary measures until the abnormal condition is corrected or the emergency crisis ceases to exist.

The safety of the plant personnel and equipment is to be carefully considered before any job is started. The Conoco safety slogan, "our work is never so urgent or important that we cannot take time to do it safely", is an idea that can help make the work area safer for everyone when it is put into practice.

Good housekeeping is also an important responsibility of the operators. It requires careful attention for safety reasons and to maintain good working conditions. Cleaning up after job completion is the responsibility of the person doing the job. A job should not be considered complete until all materials are picked up and properly stored.

GENERAL PROCESS DESCRIPTION

II. GENERAL PROCESS DESCRIPTION

A. Evacuation

Before charging, the inerts present in the polymerization reactor are removed by evacuation. The interlock selector switch is placed on "evacuation" position. The main condenser valve is opened, the reactor evacuation valve is opened, the evacuation header valve, and the steam supply valves to the ejector system to be used are opened. Any condensate in the steam to the ejector is removed by a cyclone separator. The emergency cooling water supply valve to the reactor is then opened. When the reactor reaches 28.5 inches of mercury vacuum, as indicated by the pressure indicator in the control room and a manometer at the reactor, evacuation is complete. This portion of the cycle requires about five minutes.

B. Charge

1. Precharge Preparation

After evacuation, the reactor is ready to be charged. In preparation for charge, adequate quantities of VCM, hot water, colliod solution, and initiator are made ready for the charge sequence.

Prior to charge, fresh VCM is transferred from the VCM storage sphere to the fresh VCM storage tank. This transfer of VCM begins automatically when the VCM liquid level falls below a certain level. When the high liquid level is regained, the transfer process shuts down automatically. Two 150 gpm VCM transfer pumps are used to transfer the VCM from the VCM storage sphere.

II. GENERAL PROCESS DESCRIPTION (CONTINUED)

B. Charge (Continued)

Process water is automatically supplied to the hot water tank when the water level drops below a certain point. The water is filtered by the process water filter, and is heated in the hot water preheater, enroute to the hot water tank. The hot water tank temperature is maintained by the external steam coils on the hot water tank. The colloid solution, previously made-up, remains in the makeup tank until tested and approved. The colloid percent total solids must be 1.40 - 1.60. The colloid is then pumped from the makeup tank to the colloid charge tank.

After each reactor charge, colloid is transferred at 50 gpm from the storage tank to the colloid charge tank by the colloid circulation pump. When the makeup tank contains less than one charge, the full charge tank will contain sufficient colloid to charge seven reactors. The colloid charge tank can be emptied to less than one charge while the new colloid solution is being made up and analyzed.

Immediately before the reactor is to be charged, the initiator injection system is made ready for charge in the following manner. First, the initiator injection pot, at the reactor to be charged, is drained to the sewer. One gallon of water is manually added as indicated by the local flow totalizer.

II. GENERAL PROCESS DESCRIPTION (Cont.)

B. Charge (Cont.)

1. Precharge Preparations (Cont.)

The initiator is then manually added to the initiator injection pot. The pot is then blocked in and pressurized with high pressure service water to at least 180 psig. The initiator injection system is now ready for the reactor charge. When the charge is complete. CAUTION: The initiator should never be left in the charge pot if the charge is aborted. It is to be dumped to the sewer and the pot flushed with water.

2. Reactor Charge

After evacuation is completed, the interlock selector switch is moved to the "charge" position. If the following precharge conditions are met, the charge sequence is ready to begin:

a. Levels in the fresh VCM storage tank, the hot water tank, and the colloid charge tank are adequate for a complete reactor charge.

b. There is sufficient pressure in the initiator injection pot and in the high pressure service water header.

c. The charge meters are reset to the charge quantities. Steam is usually applied to the reactor jacket at the start of charge by manually opening the steam valve from the Control Room.

II. GENERAL PROCESS DESCRIPTION (CONTINUED)

B. Charge (Continued)

2. Reactor Charge (Continued)

This aids in heating the reaction mass to the desired temperature during and immediately following charge. The automatic charge sequence begins with the hot water charge. The hot water is pumped from the hot water tank, to the reactor by the hot water charge pump. After a predetermined quantity of hot water has been charged, the colloid charge pumps and the second hot water charge pump start. The next step in the charge sequence begins with the fresh and recovered VCM charges. The fresh VCM is pumped to the reactor from the fresh VCM storage tank, by one of the two VCM charge pumps. The recovered VCM is pumped from one of two recovered VCM storage tanks by the recovered VCM charge pump into the suction of the VCM charge pump. The recovered VCM is filtered in the recovered VCM filter and the total VCM charge is filtered enroute to the reactor by the VCM charge filter.

Shortly after the beginning of the VCM charge, one of the hot water charge pumps shuts down until the VCM charge is completed and then restarts. This insures that there will be an adequate amount of water charge remaining to flush out the charge line except on D-745 where the VC line is separate. Both hot water charge pumps continue to run until charge is completed.

II. GENERAL PROCESS DESCRIPTION (Cont.)

B. Charge (Cont.)

2. Reactor Charge (Cont.)

When the VCM, water and colloid charge is complete, the initiator is charged by opening the initiator charge valve from the reactor by the "A" operator. Loading the initiator and preparation of the initiator charge pot was discussed in the precharge preparation section.

C. Polymerization

After charge is completed, the reactor interlock selector switch is placed in the "polymerization" position, and the reactor temperature controller is placed on automatic. When the reaction mass reaches 3° below desired set point temperature the steam is turned off. The reaction mass temperature is automatically controlled by varying the amount of cooling water that is passed through the top-mounted knock-back condenser and the reactor jacket.

The reaction mass is continually mixed and kept in suspension by the bottom-mounted single speed agitator. The agitator mechanical seals are lubricated and cooled by seal oil from an oil pressure unit. During polymerization, mechanical seal purge water is injected into the reactor through the reactor cleaning nozzle and through the agitator mechanical seal. The water is added to keep the reactor

II. GENERAL PROCESS DESCRIPTION (CONTINUED)

C. Polymerization (Continued)

cleaning nozzle and agitator mechanical seals clean. The purge water flow for each service is indicated with a rotameter and manually adjusted.

The inerts present in the reactor during polymerization from initiator decomposition, suspending agent and water accumulate in the reactor condenser head space. These inerts are vented to the recovery system to prevent inert blanketing.

When the desired degree of polymerization is reached and the reactor pressure has dropped to the desired pressure, the reaction is stopped by manually adding a mixture of AMS and Naugard (the short stop solution) to the reactor. High pressure service water is used to pressure the short stop solution from the initiator injection charge pot into the reactor through the same piping as the initiator charge piping. The charge pot is then blocked in and refilled with the short stop solution which will be used at the middle of steam stripping.

An emergency AMS kill pot, located at grade, is provided to pressure AMS into the reactor to kill the reaction in the event of a power failure or upon loss of agitation. The AMS will be injected into the reactor through nozzles in the reactor head, using push buttons on the control panel or by manually operated valves in the field.

II. GENERAL PROCESS DESCRIPTION (CONTINUED)

C. Polymerization (Continued)

The pots for D-741, D-742, D-743 and D-744 will contain 15-20 gallons of AMS. The material will be pressurized into the reactors using nitrogen. A nitric oxide (NO) short stop addition system is provided to inject NO into the reactors in the event of power failure, major VCM releases, fires, or other emergencies. The system is activated locally. NO is supplied from the emergency NO short stop bottles and is injected into the reactor through the same piping as the agitator mechanical seal purge water.

II. GENERAL PROCESS DESCRIPTION (Cont.)

D. Recovery and Steam Stripping

1. Recovery

When reaction is completed, the interlock selector switch is moved to the "recovery and steam stripping" position. The following sequence then occurs. The recovery compresssor seal water systems, the water recirculation systems for the recovery knockout drums, and two of the three recovery compressors are manually started from the board. Cooling water to the recovered VCM condenser and the water recirculation cooler starts automatically with the compressors, and the hydroquinone injection system starts with the compressor seal water systems.

The vapor from the reactor flows through a pressure control valve to two resin knockout drums in series which cool the vapor and remove carryover resin. The pressure control valve prevents excessive carryover of resin from the reactor by limiting the pressure to the recovery system to about 35 psig. Each of the knockout drums have an internal water spray system and a recirculation pump. Both knock - out drums have on-off level control system which, on high liquid level, divert the discharge of the water recurculation pumps to the water stripper. A water recirculation cooler, (the function of which is explained in the steam stripping portion of the recovery system process description).

II. GENERAL PROCESS DESCRIPTION (Cont.)

D. Recovery and Steam Stripping (Cont.)

is provided and can be used in the water recirculation loop of either scrubbing stage.

The VCM vapors from the knockout drums are compressed by the recovery compressors. The recovery compressors are constant volume liquid ring compressors with a water seal. The discharge streams from the compressors flow to two parallel seal water recirculation systems which operate as follows. Seal water is separated from the VCM vapors in the seal water separators, filtered by the seal water filters, cooled by the seal water coolers, and pumped back to the compressors by the seal water pumps. The flow of seal water to each compressor is controlled at 50 gpm. The seal water temperature is controlled just above the VCM condensation temperature (95-105°F). Automatic draining of the seal water separators to the water stripper is provided to maintain the correct water level.

The VCM vapors from the seal water system are condensed in two recovered VCM condensers. The condensed VCM is collected in the recovered VCM collect tank which is on automatic on-off level control. VCM is transferred to the recovered VCM storage tanks by the recovered VCM transfer pump when there is high liquid level in the VCM collect tank.

Inerts are bled from the collect tank to the incinerator.

II. GENERAL PROCESS DESCRIPTION (CONTINUED)

D. Recovery and Steam Stripping (Continued)

1. Recovery (Continued)

When the reactor pressure drops to 8 psig, the two recovery vacuum pumps automatically start. The VCM flow from the recovery knockout drums and the seal water flow are both diverted to the vacuum pumps which discharge into the suction of the compressors.

2. Steam Stripping

In order to reduce residual VCM in the slurry, the slurry in the reactor is heated and stripped with steam. At the start of a normal recovery, steam addition to the reactor is manually started from the control room and the slurry mass is heated. When the temperature of the reactor has risen to the desired temperature, the steam stripping operation is completed.

As recovery proceeds, less and less VCM is recovered from the reactor. To supply sufficient VCM vapor to the recovery vacuum pumps and compressors, a VCM backpressure system is used. This is done to prevent cavitation and overheating of the vacuum pumps and compressors. Before entering the recovery knockout drums, the steam and VCM from the reactor are combined with a bleed stream of VCM from the recovered VCM storage tanks. The amount of VCM bled into the recovery system is adjusted by the backpressure control valve such that a set supply pressure to the vacuum pumps is maintained.

II. GENERAL PROCESS DESCRIPTION (CONTINUED)

D. Recovery and Steam Stripping (Continued)

2. Steam Stripping (Continued)

The majority of the steam is condensed in the first knockout drum described in the normal recovery process description. The first stage of the scrubbing system consists of a recovery knockout drum with an internal water spray system, a water recirculation pump and the water recirculation cooler. The water cooler reduces the water temperature sufficiently to allow the internal spray system in the knockout drum to cool the VCM and condense much of the steam in the vapor stream. After leaving the first stage of the water scrubbing system, the VCM vapor flows to the second stage of the scrubbing system and then to the rest of the recovery system in the same manner as during normal recovery.

3. Hydroquinone Injection

The VCM removed from the reactor during recovery still contains a small amount of initiator. As a result, the VCM will continue to polymerize, resulting in plugged recovery lines, charge lines, and recovered VCM storage tanks. Polymerization is significantly reduced by the addition of an inhibitor such as hydroquinone to the VCM stream as it is being recovered.

A 4.6 percent solution of hydroquinone in water is prepared in the hydroquinone storage tank.

II. GENERAL PROCESS DESCRIPTION (Cont.)

D. Recovery and Steam Stripping (Cont.)

3. Hydroquinone Injection (Cont.)

The hydroquinone solution is pumped by the hydroquinone injection pump into the suction of the recovery seal water pumps. The injection pump starts and stops automatically with the seal water pumps. The metering pump has a variable stroke which can be adjusted manually to maintain the preset hydroquinone injection rate.

4. Recovery of Water Stripper

The water stripper is to collect the various steam and water streams containing VCM from the four-reactor module. The emission recovery system is used to recover VCM vapor. The water is transferred to the V-11 water strippers and recovered by the emission recovery system.

E. Reactor Dump and Rinse

After the reactor is recovered and steam stripped, the reactor interlock selector switch is moved to the "dump" position. The appropriate dump valves are opened from the control room and the slurry flows by gravity to the dump system. The slurry passes through an enclosed vibrating slurry strainer where the PVC culls are collected until dump is completed. The slurry then flows to the slurry dump tank. The slurry transfer pumps transfer the slurry to the blend tanks. The dump tank level is automatically controlled.

II. GENERAL PROCESS DESCRIPTION (CONTINUED)

E. Reactor Dump and Rinse (Continued)

Near the end of dump, the reactor condenser is flushed with water by turning on the condenser rinse system from the board. Hot water is pumped from the hot water tank by the hot water charge pumps through the cleaning nozzle in the reactor condenser. The rinse water mixes with any remaining slurry and is pumped with the slurry to the blend tanks flushing out the slurry transfer lines.

The slurry strainer and the slurry dump tank are equipped with a water wash system to remove resin from the equipment between production of different types of resin.

F. Chem Wash and Rinse

If it has been determined that the reactor needs cleaning, the reactor interlock selector switch is moved to the "clean and rinse" position after the dump and rinse is completed.

The chem wash solution is a caustic solution. The cleaning solution pump or spare pumps the solution at 500 gpm from the cleaning solution tank through the cleaning solution heater to the reactor condenser spray nozzle. The reactor atmospheric vent must remain closed to prevent splashing out of the reactor. Steam to the cleaning solution heater is automatically adjusted such that the exit temperature of the chem wash solution is 190°F. When the level in the reactor is above the agitator blades (approximately 5,000 gallons) as determined by the level change in the cleaning solution tank, no more solution is added to system. Recirculation is then started with

II. GENERAL PROCESS DESCRIPTION (Cont.)

F. Chem Wash and Rinse (Cont.)

the cleaning solution being pumped from the reactor at approximately 250 gpm and back to the reactor through the reactor cleaning nozzle. Large PVC particles picked up in the reactor cleaning process are removed from the cleaning solution in the cleaning solution strainer before entering the suction of the cleaning solution pump. When the Chem Wash has ended, the solution is pumped back to the cleaning solution tank at 500 gpm by the cleaning solution pump. For D-741, 742, 743, and 744, the process required ten minutes to fill the reactor through the condenser, five minutes to wash the reactor, and ten minutes to empty the reactor, for a total of twenty-five minutes. For D-745, the process requires a total time of forty-one minutes--twenty-one minutes to wash through the condenser, ten minutes to wash the reactor and ten minutes to empty the reactor.

After the Chem Wash is completed, the reactor is rinsed with hot water from the hot water tank. The hot water is pumped by the hot water charge pumps to the reactor. The water first enters through the condenser cleaning nozzle and then the reactor cleaning nozzle. The Chem Wash and rinse system is manually controlled from the control room. The operator monitors the bullseye at the sewer drain to be sure the reactor is empty. When the reactor amps have dropped to the no load amps indicated on the ammeter. The lead operator opens the rinse valve for a short period of time. By observing the water flowing from the bullseye he can determine that the reactor is empty.

II. GENERAL PROCESS DESCRIPTION (Cont.)

G. Water Swirl

If the resin formula calls for a water swirl, the reactor interlock selector switch is place in the "swirl" position after the Chem wash rinse is completed. Cold or hot water enters the suction of the hot water charge pumps, and is pumped through the reactor charge line into the reactor. When the water charge reaches a preset amount, the water charge system is automatically shut down. The reactor agitator is then used to swirl the water for approximately 25 minutes. The lead operator then drains the water to the sewer. This completes one reaction cycle; the reactor is now ready for evacuation.

H. Water Collection System

Various waste water streams from the process must be collected in an enclosed system for treatment. Water streams containing PVC and VCM from the recovery system, the VCM storage tanks, line and vessel purges, and miscellaneous flush and seal waters are intermittently sent to the blowdown tank.

When the liquid in the blowdown tank reaches a level 22 inches from the top of the tank, a high level alarm sounds in the control room. The "A" operator also checks the level gauge on the tank twice per shift to be sure the level doesn't go above 22 inches from the top of the tank. The operator will then start the tank's transfer pump and send the waste water to the batchwater stripping tanks in the V-11 module. The waste water is then stripped with steam and vapors are recovered with the emission recovery system. Once stripping has been completed, the waste water is drained to the sewer.

OPERATING PROCEDURE

III. OPERATING PROCEDURES

A. Reactor Evacuation

Evacuation of the reactor is required prior to charging in order to remove as much of the air as possible. Air is introduced into the reactor during previous phases of the reactor batch cycle since dump, rinse, and chem wash require that the reactor be vented to the atmosphere. Air in the reactor during reaction causes poor temperature control during polymerization and may alter the particle size of the resin.

Evacuation is accomplished using one of the two-stage steam jet ejector systems. Evacuation is controlled by the lead operator from the board. The "A" operator must confirm that all process equipment is operating correctly during evacuation.

Procedure

1. If the reactor has been opened, follow procedure given in the "Reactor Cleaning and Entry" section on how to close the reactor manhead.
2. The lead operator puts the interlock mode selector on "evacuation."
3. The lead operator checks to see that all valves are closed.
4. The lead operator opens the condenser recovery valve and the reactor evacuation valve. Then the lead operator opens the steam supply valve and the evacuation header valve to the steam ejector system to be used as follows.

III. OPERATING PROCEDURES (Cont.)

A. Reactor Evacuation (Cont.)

Procedures (Cont.)

4. Continued

(a) For D-741, 742, 743, and 744, the operator will open valves CV-230 and CV-226. THis starts the ejector system located between D-742 and D-743.

(b) For D-745 the operator will open valves CV-222 and CV-224. This will start the ejector system located between D-743 and D-744 reactor structure.

The operator then opens the emergency cooling water valve, which supplies cooling water to the reactor condenser.

NOTE: In the following steps, 5-10, the operators prepare the initiator for charge while evacuation is in progress.

5. The "A" operator will go to the initiator freezer and bring the specificed amount of initiator to the initiator injection pot. Extreme caution must be exercised by the "A" operator to be sure that no VCM is allowed to get back into the initiator injection pot. When a small amount of VCM is mixed with a large amount of initiator, an extremely fast reaction takes place giving off heat and pressure. To guard against this situation, the operator must know that he has an adequate water supply and pressure. The reactor initiator injection valve must never be opened unless the bomb is fully pressurized with the inlet water valve open.

NOTE: The following precautions must be taken when handling initiator.

III. OPERATING PROCEDURES (Cont.)

A. Reactor Evacuation (Cont.)

Procedures (Cont.)

5. Continued

(a) Plastic gloves must be worn while handling initiator.

(b) If any initiator is spilled on skin or clothings, immediately flush with water.

(c) Should any initiator remain in the containers, return it to storage.

(d) Take all empty containers to trash and split side of of all containers.

(e) Never put the cap back on the empty bottle. Dispose of the cap separately.

(f) Do not allow the initiator to stand in the bomb for more than 10 minutes. Drain it to the sewer and flush with water.

6. The "A" operator must check the injection bomb to be sure that it is empty. Close the drain valve. Open the initiator addition valve.

7. The "A" operator will manually open the HPSW inlet valve, until the initiator water totalizer shows that 15 counts of water are in the initiator to the inejction pot.

8. The "A" operator will now add the initiator to the injection pot.

9. The "A" operator will now close the initiator addition valve and inform the lead operator that the initiator loading is complete and the bomb is ready to be pressurized.

III. OPERATING PROCEDURES (Cont.)

A. Reactor Evacuation (Cont.)

Procedures (Cont.)

10. The "A" operator will now open the 1" valve which supplies high pressure service water to the initiator injection pot and pressure the pot to 180 pounds.

11. The lead operator will stop evacuation when a vacuum of 28.5 inches Hg is attained. The reactor vacuum is double checked by the "A" operator on top the reactor with a mercury manometer. The lead operator stops evacuation by closing the condenser recovery valve, the reactor evacuation valve, the evacuation header valve and steam supply valve to the ejectors. This shuts off the evacuation steam jets. He then closes the emergency cooling water valves.

12. Evacuation is now complete.

III. OPERATING PROCEDURES (CONTINUED)

B. Reactor Precharge

The reactor precharge procedure includes a series of precharge checks and precautions that must be carried out by the lead and "A" operators. If the necessary precharge conditions are not met, the Modicon (a small computer which controls the automatic charge sequence) will not allow the automatic charge sequence to begin.

It is the responsibility of the lead operator to see that all precharge checks and precautions are carried out. He should also read the log book at the start of the shift, covering the period since he was last on the job. This will alert him to any changes in formula, mechanical, or operational procedures that may not have been passed on verbally.

1. Lead Operator Duties

   a. Check level in fresh VCM receiver to see that it is adequate for charge. 80% reading on the level gauge at the panel.

   b. Drain water in the recovered VCM receiver to the water stripper. Valves from the recovered receiver are manually opened from the board until pressure rise in the blowdown tank indicates all the water is out and VCM is being transferred. Valves are then manually shut from the board.

   c. Fill out the reactor charge sheet.

   d. Check the hot water tank level and temperature. Tank level should be 85% and the tank temperature 160°F.

III. OPERATING PROCEDURES (CONTINUED)

B. Reactor Precharge (Continued)

1. Lead Operator Duties (Continued)

e. Check to see that all valves on the reactor are closed.

f. Have the "A" operator make a precharge check and reading of the following:

(1) Dura-Seal* oil level and pressure.

(2) Mechanical seal purge water pressure and rate to the reactor agitator seal.

(3) Colloid charge tank level and temperature.

g. Record the readings on the charge sheet as they are transmitted by the "A" operator.

2. "A" Operator Duties

a Check Dura-Seal* level and pressure. There are two Dura-Seal* units. One supplies seal oil pressure to all five reactor agitator mechanical seals and the other is a spare and starts automatically when the operating unit has low seal oil level or discharge pressure. If both units fail, an emergency supply of seal oil is provided by the emergency seal oil drum that is nitrogen pressurized. Valves must be opened manually at the unit if the emergency seal oil system is used.

*Registered Trademark

III. OPERATING PROCEDURES (CONTINUED)

B. Reactor Precharge (Continued)

2. "A" Operator Duties (Continued)

NOTE: When the primary and spare Dura-Seal* oil units are down and the emergency system is in operation, reactors are not to be charged until at least one of the Dura-Seal* oil units is operating. The emergency system is designed to be a backup system that should be used short term only.

When one of the Dura-Seal* oil units is not in operating condition, inform the lead operator so that repairs can be made.

The seal oil level should be checked in both units. The discharge pressure should be checked and be in the range of 205-250 psig. If the pressure falls below 205 psig, the spare unit will automatically start up and the primary unit shut down. The spare unit will also automatically start up and the primary unit shut down when a low seal oil level is detected in the primary unit. Report the seal oil pressure to the lead operator.

*Registered Trademark

III. OPERATING PROCEDURES (CONTINUED)

B. Reactor Precharge (Continued)

2. "A" Operator Duties (Continued)

b. Check the mechanical seal purge water pressure and rate of flow to the agitator mechanical seal. Pressure should be 180-220 psig. Adjust the water flow rate to that given in the formula.

Report the seal water pressure and flow rate to the lead operator.

c. Check the colloid charge tank level to be certain enough is in the tank to complete a charge. Notify the lead operator of the level present. A level of at least 26 inches should be shown on the sight glass before charge is started.

d. Inform the lead operator when checks are completed and the reactor is ready for charge.

III. OPERATING PROCEDURES (Cont.)

C. Reactor Charge

This section includes vacuum break and reactor charge. The reactor charge is one of the most critical operations in terms of product quality. Care must be taken to assure that all the raw materials are added in the proper order and amount.

Procedure

1. When evacuation and precharge checks are complete, the lead operator can move the interlock mode selector to "charge."
2. The lead operator should take the following steps and see that the following conditions are met before charge:
   a. VCM transfer should be in auto.
   b. Recovered VCM charge should be in auto with either the primary or spare pump selected for charge.
   c. Fresh VCM charge should be in auto with either the primary or spare pump selected for charge.
   d. Hot water charge should be in auto.
   e. Colloid charge should be in auto with either the primary or spare pump selected for charge.
   f. Select recipe to be charged by dialing recipe number on the recipe selector on on the board.
   g. Push the meter reset button, which resets all charge meters.

III. OPERATING PROCEDURES (CONTINUED)

C. Reactor Charge (Continued)

Procedure (Continued)

h. The charge light will now come on if all the following conditions are met:

(1) The fresh VCM storage tank, hot water tank, and colloid charge tank all have a level adequate for one complete charge.

(2) One reactor is in charge mode.

(3) The high pressure service water header is at least 150 psig.

(4) The reactor being charged has at least 28.5 inches Hg vacuum.

(5) The initiator injection pot is at least 180 psig.

3. When a charge light is obtained on the panel, the lead operator will inform the "A" operator to stand by for breaking vacuum. The lead operator will break vacuum by:

a. Manually opening the reactor VCM charge valve from the board.

b. Manually opening the reactor charge valve from the board.

c. Turbine meters will start counting as VCM flows into the reactor.

d. As soon as a positive pressure is indicated in the reactor, close the VCM charge valve.

III. OPERATING PROCEDURES (Continued)

C. Reactor Charge (Continued

4. The "A" operator will then watch the pressure gauge at the top of the reactor. When the pressure rises above zero, start checking the following:

   a. Inspect manhead visually and listen for escaping vapor.

   b. Check safety disc gauges for pressure. Any pressure indicates a leaking or ruptured disc.

   c. Turn flush water (injection water) on sprayhead. The purpose is to keep spray heads free of resin. Set rate according to recipe.

   d. If all checks okay, notify lead operator. If not, notify lead to hold on charge until problem can be corrected.

5. The lead operator can now push the charge button. In rapid sequence, the following occurs:

   a. Reactor water charge valve opens.

   b. "A" hot water pump starts, valves open, and water starts into the reactor.

   c. The valves from the fresh VCM receiver to the VCM charge pump and discharge valve open.

   d. At set point No. 1 on water meters:

*Registered Trademark

III. OPERATING PROCEDURES (CONTINUED)

C. Reactor Charge (Continued)

Procedure (Continued)

(1) "B" hot water pump starts and discharge valve opens.

(2) The colloid charge pump discharge valve will open and pump will start. The preset amount of colloid will be pumped into the reactor. When the colloid meter set point is reached, the colloid charge pump will cut off and the discharge valve and reactor colloid charge valve will close.

NOTE: The lead operator will turn on reactor jacket steam during colloid and water charge to assist reactor heatup.

e. At set point No. 2 on water meter, the reactor VCM charge valve opens and the VCM and recovered VCM charge pumps start.

f. At set point No. 3 on the water meter, "B" hot water pump stops and discharge valve closes. This allows time for all VCM to be charged to the reactor before the water charge is completed.

NOTE: A partially plugged filter pack can cause slow VCM flow, and it may be necessary to cut off "A" hot water pump also. If this should happen, be sure to have a minimum of 50 counts left on water charge meter. This is enough to clean lines and manifold of VCM. When the VCM is within ten counts of being complete, put "A" and "B" hot water pumps back on automatic and complete the charge.

III. OPERATING PROCEDURES (Cont.)

C. Reactor Charge (Continued)

NOTE: When a filter is known to be fouled, isolate and switch to the spare unit. If you continue to try to force VCM through fouled filters, the high pressure will cause the filter elements to collapse and greatly increase the time taken to change them out. Collapsed filters also will cause a gel problem affecting the quality of the resin.

g. When VCM meters reach the set point (two meters running in tandem, first to reach the set point cuts pump off and closes valve), the VCM pump, outlet valve, inlet and discharge valve to VCM charge pump, and reactor VCM valve close. This action also starts "B" hot H_2O pump and opens discharge valve.

h. At set point No. 4 on the water meters, "B" hot water pumps stop, and the valves close.

i. At set No. 5 in the water meters "A" hot water pump stops and the valves close. At this time the main dump valve also closes.

6. When the automatic charge sequence has been completed, it is safe to charge the initiator.

7. The "A" operator charges the initiator by opening the initiator reactor charge valve and flushing the initiator into the reactor with 50 counts of high pressure service water.

8. The lead operator will now record the final recator temperature. Adjust reactor temperature set point to setting called for in the formula and put temperature controller in "auto" position.

III. OPERATING PROCEDURES (CONTINUED)

D. Polymerization

Polymerization is the phase of the reactor cycle in which liquid VCM is converted into solid PVC. This portion of the reactor cycle is mainly accomplished by accurate instrumentation. The primary area of responsibility for the lead operator is coordination of the activities of the "A" operator. The "A" operator is required to kill the reaction when polymerization has progressed to the point that product quality is satisfactory.

1. Lead Operator Duties

   a. Change the interlock mode selector to "polymerization." Monitor the temperature and pressure closely until the reactor reaches the desired set point and lines out.

   b. Cut off steam valve to jacket at two to four degrees below set point, depending on the rate of temperature rise.

   c. Have the "A" operator sample the reactor 1 hour after reading heat up. a fresh air mask must be worn and personnel cleared of the general area before sample is taken.

   d. Examine the resin. At this stage the resin should be formed into individual separate particles. Notify the shift supervisor if you notice the following:

      (1) Stringers - Resin particles are stringy and stuck together.

      (2) Hard Particles - Gritty resin particles which are harder ahd larger than most.

III. OPERATING PROCEDURES (CONTINUED)

D. Polymerization (Continued)

1. Lead Operator Duties (Continued)

If either of the above conditions are observed, have the "A" operator take samples every fifteen minutes until the shift supervisor makes the decision as to what co corrective action should be taken.

e. It may become necessary to remove the inerts. Inerts in the condenser will cause the reactor pressure to rise as they blanket the condenser and do not allow VCM vapor to be condensed. Under these conditions, less heat can be removed even though the condenser water flow will be full open. Vent the inerts through the main condenser valve to the recovery system. Start the compressors and put the pressure controller in manual and close the control valve. Open the reactor condenser valve and recovery valve. Set the controller on 35 psig and put it back in automatic.

f. Irregularities during polymerization:

(1) Slow Heatup--May be caused by weak or no initiator. Slow heatup can also be caused by no steam on reactor jacket or the cooling water valves may be open. Contact the shift supervisor if this condition persists.

III. OPERATING PROCEDURES (CONTINUED)

D. Polymerization (Continued)

1. Lead Operator Duties (Continued)

(2) Long Reaction Time--Caused by low initiator level, weak initiator, long heat up, low reactor temperatures or chem wash solution setting or chem wash solution in the batch. If there is only slow reaction and the resin checks okay, the shift supervisor will give word on what to do.

If caustic is in the reactor, the batch will turn slightly yellow and coarsen. If this is found to be true, kill immediately with the amount of short stop solution specified in the formula.

(3) Simultaneous Temperature and Pressure Rise--Check cooling water temperature and valves. The reactor is producing more heat than the cooling water can remove. Also could be an overcharge of initiator. Notify shift supervisor for instructions.

(4) Simultaneous Temperature and Pressure Drop--The cooling water valves are probably wide open. This happens more often in freezing weather when relays freeze up. Throttle manual valves until malfunction is found and corrected.

(5) Agitator Kicks Out or Power Failure--Most power failures are of short duration (seconds to two minutes), and the reactor pressure does not have time to build to a dangerous level. If outage is prolonged, the pressure will build.

III. OPERATING PROCEDURES (CONTINUED)

D. Polymerization (Continued)

1. Lead Operator Duties (Continued)

If this situation occurs, follow the procedure in Section III.D.3 which outlines action to be taken during emergency shutdowns (such as during a power failure).

2. "A" Operator Duties

a. When charge is complete, recheck water injection rates through the cleaning nozzle and seal flush.

b. On instruction from the lead operator, resin samples will be taken from the reactor. This normally occurs 1 hour after heat up. If the first sample shows formation of undesirable resin particles, additional samples may be called for every fifteen minutes until a decision is made about what should be done with the batch.

When taking a sample from the reactor a fresh air mask must be worn and personnel cleared of the general area.

c. When the lead operator instructs the "A" operator to do so, the batch is killed by adding short stop solution to the reactor. The amount of short stop solution and the procedure for adding it depends on the product. The kill procedure is as follows:

5305 (normal)	-	1½ gallons AMS
5305 (CTA)	-	3½ gallons AMS/3½ gal. Naugard
5425	-	1½ gal. AMS/2½ gal. Naugard initially and again at 170°F.
5465	-	2½ gal. AMS/3½ gal. Naugard initially and again at 170°F.
5385	-	1½ gal. AMS/3½ gal. Naugard

III. OPERATING PROCEDURES (CONTINUED)

D. Polymerization (Cont.)

It is very important that the proper amount of short stop solution be added since it effects the quality of the resin. High pressure service water is used to pressure the short stop solution from the initiator put into the reactor.

3. Emergency Shutdown

The following steps are to be taken during emergency shutdown:

a. 1. Use the AMS emergency kill system for killing each reactor. Each reactor has a pot located at grade beside each reactor, containing AMS. The AMS is injected into the head space of the reactor with nirtogen by opening the appropriate control valves, from the control room. The hand switch for the control valves for each reactor is located next to the agitator start-stop handswitch on each reactors control station. Refer to the operating manual for the AMS Emergency Kill System.

2. If the AMS does not stop the reaction, use the nitric oxide (NO) short stop system for killing each reactor. There are six cylinders of NO that can be released for each reactor D-741, 742, 743 and 744. D-745 has twelve cylinders of NO which can be released. The NO system can be activated at the reactors by manually opening the correct valves.

III. OPERATING PROCEDURES (Cont.)

D. Polymerization (Cont.)

3. Emergency Shutdown (Cont.)

b. Use nitrogen to pressurize the Dura-Seal* unit emergency seal oil drum and the mechanical seal purge water surge drum. The valves connecting the emergency seal oil and seal water drums with their respective systems must be opened manually.

c. There will be sufficeint air in the air system surge tank to operate valves for approximately fifteen minutes. It will be necessary to use the nitrogen backup system to operate valves after fifteen minutes. The surge tank should be valved off before the backup nitrogen system is activated.

d. Monitor each reactor for pressure rise. If the pressure continues to rise, the following steps are to be taken:

(1) Equalize the reactor with any other empty or killed reactor of the same type product.

(2) If the pressure still continues to rise, vent through the main condenser valve to the recovery system and the recovery system to the recovered VCM receiver.

(3) If this will not relieve the pressure buildup, then equalize the reactor with a reactor of different type resin.

* Registered Trademark

III. OPERATING PROCEDURES (CONTINUED)

D. Polymerization (Cont.)

3. Emergency Shutdown (Cont.)

d. (4) When 1, 2, and 3 alone fail to relieve the reactor pressure, the relief valve vent system will allow the reactor to vent off and on thru the relief valves to control the pressure.

NOTE: Step (4) is to be the last resort. Under the new EPA law, any venting must be reported and could result in a fine.

The follwing guidelines, when followed, will control a runaway reactor and prevent a VCM release. The NO system is to be activated if either one of the parameters is exceeded.

Resin Type	Maximum Temperature	Maximum Pressure
5385, 5425, 5465	142°F	145 psig
5305 (CTA)	152°F	155 psig
5305 (Normal)	162°F	165 psig

NO is high poisonous orange-brown colored gas. A Scott Air Pak must be worn while killing a reactor with the NO short stop system.

E. Recovery and Steam Stripping

The reactor is ready for recovery when certain conditions are reached in the reaction process. The conditions under which recovery will start are:

Pressure Drop -- There is not enough unreacted VCM left in the reactor to maintain run pressure. A pressure drop is accompanied by a drop in the cooling water flow to the reactor jacket and condenser.

Runaway --Reaction has increase to the point that it has outrun the capabilities of the cooling water to control. Temperature and pressure will

III. OPERATING PROCEDURES (CONTINUED)

E. Recovery and Steam Stripping (Cont.)

Runaway (Cont.)

both rise when this occurs. Follow instructions on each product formula as to the exact conditions at which the reaction is killed.

Temperature Rise-Pressure Drop-- This is the ideal recovery situation and indicated proper initiator loading. The reaction will peak and slightly out run the capabilities of the cooling water. This situation gives the best recovery conditions since there is less VCM to be recovered and more converted to resin.

Quick-Kill-- A reactor is sometimes killed on specific products to meet certain customer specifications--lower dry time (higher plasticizer absorbtion). The reactor is killed with a specified amount of the short stop solution at a specified set of conditions. The short stop solution mixture stops the reaction chain.

On a quick-kill batch, it is very important to guard against resin carryover to the recovery system. An injection of defoamer will help to control foaming. A fast recovery is also important and will affect the dry time.

1. "A" Operator Duties

When notified by the lead operator that the recovery conditions specified in the formula are met, the "A" operator will take the following steps:

a. Check the hydroquinone injection sytem to make sure that the proper valves are open and hydroquinone level is adequate.

b. Check the blowdown tank level and pressure. Level and pressure must be low to allow the automatic drain on the water recirculation pump to operate.

VAB.0001146684

III. OPERATING PROCEDURES (Cont.)

E. Recovery and Steam Stripping (Cont.)

1. "A" Operator Duties (Cont.)

c. Check the water levels in the seal water separators and knockout drums. These levels are controlled automatically but should be checked before startup. Knockout drum level should be at or below the mid-point of the inlet to the vessel. The seal water separator level should be at or below the mid-point of the inlet of the vessel.

d. Check the backflow pressure controller. It should be set at twenty-five inches Hg vacuum.

e. Check to see that the flush to the knockout drum and seal water separator level gauges are on set at 1 gpm. These are FI-726, FI-727, FI-741, and FI-742.

f. Notify the lead operator that the recovery system is ready to startup.

g. Steam header pressure should be greater than 100 psig.

h. Reactor steam line should be checked and reactor steam valves should be checked to make sure they are opening correctly.

2. Lead Operator Duties

a. When the "A" operator has checked the recovery system, the lead operator can change reactor interlock mode to "recovery."

b. Start the water recirculation pump, 72-889 and 72-890.

III. OPERATING PROCEDURES (Cont.)

E. Recovery and Steam Stripping (Cont.)

2. Lead Operator Duties (Cont.)

c. Start the seal water pumps, 72-891 and 72-892. This automatically starts hydroquinone injection pump 72-895.

d. Two recovery compressors, 72-903, 72-904, or 72-905, are started from handswitches located on the recovery control panel. This starts two compressors and opens the valves associated with compressor startup.

e. The vacuum pumps will atuomatically come on when the suction pressure of the compressor is 7 psig. The necessary valve changes are also automatically made.

f. When the reactor reaches the pressure specified in the product formula, the lead operator will move the reactor temperature set point to the specified stripping temperature, set the steam stripping flow controller on 23,000 lbs/hour, and begin steam stripping.

g. Watch the temperature of the reactor condenser.

h. When stripping conditions specified in the formula are met, steam stripping is complete.

i. When steam stripping and recovery is complete, the recovery system is shut down as follows:

III. OPERATING PROCEDURES (Cont.)

E. Recovery and Steam Stripping (Cont.)

2. Lead Operator Duties (Cont.)

i. (1) Push stop buttons for the recovery compressor 72-903, 72-904, 72-905. This also stops the vacuum pumps.

(2) Push stop buttons for seal water pumps 72-891 and 72-892. This also stops hydroquinone injection pump.

(3) Push stop buttons for the water recirculation pumps, 72-889-72-890.

3. Recovery System Troubleshooting

a. High Compressor Outlet Temperature

Probable cause is poor or no water recirculation in the recovery knockout drum, 45-760. Check VCM feedback controller setting. Controller setting should be at 25 inches Hg.

b. High Compressor Discharge Pressure

High pressure can be caused by:

(1) Plugged Condenser-- Have lead operator report problem to the shift supervisor.

(2) Plug in the Line from the Condenser to the VCM Collect Tank--Line will have to be pulled and cleaned.

(3) High Level in the VCM Collect Tank

(a) Switch transfer pump to manual.

(b) Check level of the recovered VCM receiver--east or west.

(4) High RVCM Receiver Pressure

(a) Switch receivers

(b) Check line pressure to V-11 RVCM receivers to be sure line is not plugged.

III. OPERATING PROCEDURES (Cont.)

E. Recovery and Compressor Stripping (Cont.)

b. High Compressor Discharge Pressure (Cont.)

(5) No Cooling Water to Condenser--Check inlet and outlet water valves.

(6) High Seal Water Temperature--This temperature should be $110^{o} \pm 10^{o}$. Check seal water pump for flow and pressure and check filter pack.

c. If the compressor is not compressing the VCM vapor and does not have a 50 to 70 psi discharge pressure:

(1) Check seal water flow.

(2) Check seal water separator water level and adjust as necessary.

(3) Check seal water temperature--below $80^{o}F$ water will condense the VCM vapor and cause displacement of the water seal around the compressor cone.

d. Recirculation water pump 72-889 goes out (mechanical-electrical).

(1) Under normal operation, recirculation water pump 72-889 circulates water through the water recirculation cooler and into recovery knockout drum 45-760. Crossover piping is provided so that, if recirculation water pump 72-889 fails, recirculation water cooler and into recovery knockout drum 45-761.

NOTE: Normal operating temperatures for the recovery system during stripping are:

III. OPERATING PROCEDURES (Cont.)

E. Recovery and Steam Stripping (Cont.)

3. Recovery Troubleshooting (Cont.)

d. (1) Continued

(a) Reactor Condenser - 215-225°F (Peak Temperature)

(b) 45-760 Knockout Drum Outlet - 122-128°F

(c) 45-761 Knockout Drum Outlet - 90-115°F

(d) Compressor Outlet - 130-140°F

The lead operator must monitor these temperatures on the multipoint recorder and have the "A" operator check out and correct deviations.

e. Reactor Foaming (carryover)--When foaming is detected, the "A" operator will:

(1) Inject defoamer into the reactor to reduce slurry surface tension and lower the reactor slurry level. It may become necessary for the lead operator to shut down one compressor to slow the recovery. If excessive foaming occurs, shut down recovery and thoroughly flush the entire system with water until clear. All flushing must be done to the blowdown tank.

III. OPERATING PROCEDURES (CONTINUED)

F. Reactor Dump and Rinse

When the recovery of the reactor has been completed, the slurry is ready to be dumped to the slurry blend tank(s) that has been designated by the shift supervisor.

1. "A" Operator Duties

a. Check the selected blend tank or tanks to make sure it will hold the batch.

b. If transferring to small blend tank, set up piping to go to appropriate tank. Check to see that the blend tank sewer valve is closed and the aeration is flowing in the tank.

c. Check the slurry transfer pump valving to make sure the flow will be going to the correct line.

d. Place the coarse overflow collector into position. Inform the lead operator that the dump can begin.

e. Monitor the dump tank level until the flow to the pump and discharge from the reactor have leveled out to a steady rate.

f. Add the formula amount of calcium stearate to the dump tank as directed by the shift supervisor.

*Registered Trademark

III. OPERATING PROCEDURES (Cont.)

F. Reactor Dump and Rinse (Cont.)

2. Lead Operator Duties

a. Select the blend tank to be used by opening the appropriate control valves in the slurry transfer lines. The valves are operated by handswitches located on the recovery section of the control panel, as follows:

CV-1521	To T-501
CV-1522	To T-407
CV-1506	To T-747
CV-1523	To T-502
CV-1524	To small blend tank manifold

b. Check the sewer valve on the reactor to be sure it is closed.

c. Turn on the Sweco* strainer.

d. Check the Sweco* exhauster to be sure it is running. It should be running continuously.

e. Turn the interlock mode selector switch to the "dump" position.

f. After the "A" operator informs lead operator that dump can begin, place the slurry transfer pumps, 72-896 and/or 72-897, in the "run" position. This opens the slurry transfer pumps' seal water supply valves, CV-864 and/or CV-866, before the pumps start. The level in slurry dump tank 45-766 is automatically controlled.

g. Five minutes after the start of dump, open the reactor vent to go the atmosphere.

*Registered Trademark

III. OPERATING PROCEDURES (CONT.)

F. Reactor Dump and Rinse (Cont.)

2. Lead Operator Duties (Cont.)

h. When there is no slurry flow through FI-747, the reactor is rinsed according to formula instructions. Reactor is empty when agitator shows no load amps and sewer bullseye shows no flow.

i. When dump and rinse are complete, place the slurry transfer pumps in the stop position. This shuts down the pumps, 72-896 and/or 72-897, and closes the slurry transfer pump seal flush water valve, CV-864 and/or CV-866.

G. Chem Wash and Rinse

Chem wash and rinse is not done as a matter of routine on all reactors however, if it has been determined that chem wash is needed, the formula states what the lead operator is to do.

After the reactor has been rinsed during the dump cycle, it is ready to be chem washed. The chem wash cycle is necessary to remove polymer buildup from the reactor condenser, walls, baffles, and agitator. If polymer buildup is allowed to remain in the reactor, it continues to grow with each successive charge. Buildups will contribute to high gel, low quality resin, and will make reactor dumping very difficult if they get large enough to break off and plug dump valves and lines. Operators must exercise caution during chem wash due to the caustic in the solution. If any solution gets on a operator, flush immediately with water. Caustic feels slick to the touch and will start burning the skin just a few seconds after contact. If the solution should spray over

III. OPERATING PROCEDURES (Cont.)

G. Chem Wash and Rinse (Cont.)

the body, immediately get under a safety shower and remove your clothing, If any should get in the eyes, flush eyes for at least fifteen minutes until all burning stops and report to your supervisor.

Procedure

1. The lead operator will check and make sure the reactor sewer valve is closed.
2. The lead operator will then place the interlock mode selector switch to "clean and rinse."
3. The lead operator then checks to see that the cleaning solution tank, 45-767, is at least 85 percent full.
4. The lead operator then opens the valves from the cleaning solution pumps, 72-989 or 72-899, to the reactor condenser cleaning nozzle. The atmospheric vent on the reactor should be closed. All other reactor valves are closed.
5. The lead operator then opens the suction valves, CV-873, for the cleaning solution pumps, 72-898 or 72-899.
6. The lead operator will then turn on one cleaning solution heater temperature controller is set at 190°F.
7. The lead operator will then turn on one cleaning solution pump 72-898 or 72-899.

III. OPERATING PROCEDURES (Cont.)

G. Chem Wash and Rinse (Cont.)

Procedure

8. When the chem wash solution has been flushed through the reactor condenser, the lead operator will: CAUTION: The atmospheric vent valve must remain closed.
   a. Stop the cleaning solution pump.
   b. Close pump suction valve CV-873 from the cleaning solution tank.
   c. Open chem wash return valve on reactor.
   d. Open cleaning solution pump suction valve CV-874 from the reactor.
   e. Close valves to the reactor cleaning nozzle.
   f. Open valves to the reactor cleaning nozzle.
   g. Restart the cleaning solution pump. The chem wash solution should now be circulating from the bottom of the reactor back to the reactor cleaning nozzle.
   h. The reactor agitator remains on.
9. The lead operator will recirculate the chem wash solution through the reactor for five minutes and will then pump the chem wash solution back to the cleaning solution tank by:
   a. Opening CV-872
   b. Closing CV-871. This sends the cleaning solution pump discharge to the cleaning solution tank.

III. OPERATING PROCEDURES (Cont.)

G. Chem Wash and Rinse (Cont.)

Procedure (Cont.)

10. The "A" operator should monitor the cleaning solution pump and notify the lead operator when it loses suction (check pressure gauge on pump discharge).
11. The lead operator will now shut off the cleaning solution pump.
12. The lead operator will then check the cleaning solution tank level indicator to see if all the chem wash solution has returned. If any solution is lost or accidentally dumped to the sewer, notify the utilities operator. The spilled solution must be neutralized to avoid upsetting the chemical balance in the lagoons.
13. The lead operator will now close the reactor cleaning valves and open the condenser cleaning valve and the reactor sewer valve.
14. The lead operator will cut on both hot water charge pumps and flush through the condenser to the sewer for ten minutes.
15. The lead operator will then close the condenser cleaning valve, open the reactor cleaning valve, and flush the reactor to the sewer for ten minutes. Reactor is empty when agitator shows no load amps and sewer bullseye is empty.
16. The lead operator will now close the reactor sewer valve and open the atmospheric vent.
17. Because of the water dilution and resin accumulation, chem wash solution must be disposed of and fresh caustic pumped to the cleaning solution tank once per week. Follow the procedure outlined under "Used Chem Wash Solution Disposal".

III. OPERATING PROCEDURES (Cont.)

H. Full and Partial Swirl

To assist in the production of quality resin, particularly low gel, it has been found that, by filling the reactor with water and agitating, the gel count is markedly lower.

1. Full Swirl

In this swirl, the reactor is almost completely filled with water.

Lead Operator Duties

a. Turn the interlock mode selector switch to the "swirl" position.
b. Opens the reactor main charge valve and water charge valve.
c. Starts both hot water charge pumps.
d. (1) D-741, 742, 743, and 744--Adds 1500 counts of water to reactor (15,000 gallons).

   (2) D-745--Adds 2000 counts of water to reactor (20,000 gallons).
e. Cuts off pumps and closes valves.
f. Agitates for ten minutes.
g. Opens sewer valve and dumps.

2. Partial Swirl

This swirl procedure is the same as the full swirl except for the amount of water used. Charge 750 counts (7500 gallons) for D-741, D-742, D-743, and D-744 and 1000 counts (10000 gallons) for D-745. Then follow the same procedure as the full swirl.

III. OPERATING PROCEDURES (Cont.)

I. Colloid Solution Makeup

A-Operator

The properties of polyvinyl chloride (PVC) are strongly dependent upon the type and quality of the colloid solution used. The colloid solution must be made very accurately and consistently every time it is prepared. The colloid solution is a 1½ percent solution of Dow F-50 Methocel* powder in water.

There is a local instrument panel located near the colloid makeup tank on the second floor of the recovery building. These instruments are to aid the operator in making the colloid solution in a consistent manner.

1. Lead Operator Duties

As soon as the lead operator is notified by the "A" operator that the colloid storage tank level is below the straight wall, he will schedule the "A" operator to make up colloid solution as follows:

a. With the "A" operator at the colloid tanks, open the makeup tank outlet valve (CV-857) and start the colloid transfer pump to the transfer the colloid solution to the storage tank.

b. To mix any remaining heel in the storage tank with the new colloid solution, open the storage tank inlet valve (CV-858).

* Registered Trademark

III. OPERATING PROCEDURES (CONTINUED)

I. Colloid Solution Makeup (Continued)

1. Lead Operator Duties (Continued)

and circulation pump inlet valve (CV-859) and start the colloid circulation pump. The charge tank inlet valve (CV-861) must be closed.

c. When the "A" operator indicates that the makeup tank is empty, close the makeup tank outlet valve (CV-857) and turn off the transfer pump.

d. With the circulation pump still running, notify the "A" operator to catch a colloid solution sample and take it to the laboratory for analysis.

e. Close the storage tank inlet valve (CV-858) and circulation pump inlet valve (CV-859) and turn off the circulation pump.

f. Schedule the "A" operator to makeup a new batch of colloid solution as soon as possible.

g. During the first part of the colloid makeup procedure when notified by the "A" operator, the lead operator will open the hot water charge valve (CV-706) and will start one hot water charge pump and the discharge valve associated with the charge pump to transfer hot water to the colloid makeup tank. The colloid makeup tank water meter will close the valves and shut down the hot water pump automatically when it reaches its set point.

III. OPERATING PROCEDURES (CONTINUED)

I. Colloid Solution Makeup (Continued)

2. "A" Operator Duties

The "A" operator aids in colloid solution transfer by notifying the lead operator when the colloid storage tank needs to be refilled. After transfer, the "A" operator notifies the lead operator that the makeup tank is empty.

laboratory.

When notified by the lead operator, the "A" operator makes up a new batch of colloid solution by the following procedure:

a. Bring eight bags of Dow F-50 Methocel* powder (50 pounds per bag) to the top of the colloid makeup tank.

b. Rinse the colloid makeup tank with water to the sewer until it is clean.

c. Reset the colloid makeup water meter to 538 gallons, open the colloid tank inlet valve (CV-856), and notify the lead operator to open the hot water charge valve (CV-706), start a hot water charge pump, and open the discharge valve associated with the pump selected. The water meter will stop the pump and close the actuated valves that were opened when the set point is reached. Check to see that the agitator blades are covered.

*Registered Trademark

III. OPERATING PROCEDURES (CONTINUED)

I. Colloid Solution Makeup (Continued)

2. "A" Operator Duties (Continued)

d. Start the colloid tank heater and the tank agitator. The temperature controller will close the steam valve when the water in the tank reaches 200°F.

e. When the heater is off, add the methocel powder very slowly with the agitator still on. Each bag should take about one minute to add. If the powder is added too quickly, it will form lumps and not dissolve properly. Carry the empty bags to a trash container.

f. Allow about thirty minutes to let the agitator thoroughly mix the powder into the hot water. Check the mixture for lumps and continue to mix if lumps are present.

g. When the mixture contains no lumps, reset the colloid makeup water meter to 2,623 gallons and open the colloid tank inlet valve (CV-856) and the colloid tank water valve (CV-828) to add cold water. The water meter will close the actuated valves that were opened when the set point is reached. Measure the outage on the colloid makeup tank to check the accuracy of the water meter. The straight wall portion of the tank contains 14.8 gallons per inch.

III. OPERATING PROCEDURES (CONTINUED)

I. Colloid Solution Makeup (Continued)

2. "A" Operator Duties (Continued)

h. Start the colloid tank cooler. The temperature controller will close the cooling jacket valve when the colloid solution reaches 85°F. Check the cooling water temperature. If it is 80°F or above, the solution will cool very slowly; so close the manual cooling water valves and open the process water valves to the jacket.

i. Check the temperature after four hours of cooling. If the temperature is 85°F and the temperature controller has closed the cooling jacket valve, turn off the agitator. If the tank is still cooling, leave the agitator on until the tank has reached 85°F. It is very important to cool the colloid solution completely each time to produce a good quality colloid solution.

j. Caution: Spills of colloid solution are slick and present a a dangerous slipping hazard.

III. OPERATING PROCEDURES (CONTINUED)

J. Hydroquinone Solution Makeup

Hydroquinone is injected into the recovery system to short stop the chain reaction and polymerization of vinyl chloride. If the hot VCM gases are allowed to flow through the recovery lines without any inhibitor, they continue the reaction that was started in the reactor and rapidly fill and plug the recovery lines. Plugged lines in the recovery system are very time consuming to pull and clean and cause considerable amounts of downtime.

Adequate and accurate injection of hydroquinone eliminates this problem. Hydroquinone (commercial name Tecquinol*) comes in a powder form and must be put into a solution with water for our use.

When the hydroquinone solution level is low, as determined by the low level alarm LA-733 in the control room and/or by the hydroquinone storage tank sight glass, a new batch is to be made. Each batch should last approximately one month.

1. Lead Operator Duties

As soon as it is determined that the hydroquinone storage tank is low, the lead operator should schedule hydroquinone makeup between reactor recoveries.

*Registered Trademark

III. OPERATING PROCEDURES (CONTINUED)

J. Hydroquinone Solution Makeup (Continued)

2. "A" Operator Duties

When notified by the lead operator to make up a new batch of hydroquinone solution, the "A" operator does the following:

a. Weight up twenty pounds of hydroquinone powder.

b. Turn off hydroquinone metering pump suction valve and, with the nitrogen turned on and the vent closed, drain the remaining heel to the sewer and rinse with water to the sewer.

c. Open the vent and add water until the tank is about half full.

d. Turn off the nitrogen temporarily and add the hydroquinone powder through the funnel.

e. Turn on the agitator and open the nitrogen line.

f. Fill with water to the full mark on the sight glass (fifty gallons).

g. Close the vent and mix until the powder is dissolved.

h. Make sure the valves are lined up to the hydroquinone metering pump.

3. Safety Precautions

Rubber gloves and full face shield must be worn while handling and transferring hydroquinone dust and liquid. Hydroquinone dust can irritate and seriously damage the eyes.

III. OPERATING PROCEDURES (CONTINUED)

J. Hydroquinone Solution Makeup (Continued)

3. Safety Precautions (Continued)

First Aid--In case of contact, immediately flush eyes with water for fifteen (15) minutes. Notify the plant nurse. Flush skin with water and wash clothing before reuse.

K. Used Chem Wash Solution Disposal

Procedure

1. The shift supervisor must have given instructions to dump the used chem wash solution and make up a fresh batch.
2. The lead operator will instruct the "A" operator to open the tank's drain valve. The valve is opening using the gear operator on the valve.
3. As soon as the tank is empty of solution as indicated by the level indicator in the control room, the "A" operator will open the three inch process water valve to the tank to flush out the tank. Then the "A" operator will close the process water valve and the drain valve.
4. Make up a new batch of cleaning solution. Notify the P-1 operator to transfer new caustic to the tank.

NOTE: Notify the utility operator that the cleaning soution has been dumped to the sewer.

III. OPERATING PROCEDURES (CONTINUED)

L. Initiator Handling and Storage

In the conversion of vinyl chloride monomer to polyvinyl chloride resin, an initiator is needed to start and help sustain the reaction process. The Aberdeen plant uses peroxide-type initiators. The physical properties of the type resin needed determines the type of initiator to be used. All of these products must be kept in cold storage because of rapid dangerous decomposition rates at room temperatures. The initiator is a skin and eye irritant and must be handled accordingly.

Safety precautions for all types of initiator are basically the same, with some differences in handling temperatures and explosive limits.

1. Safety Precautions in Handling Initiator

a. Wear full face shield when handling an open container.
b. Avoid contact with skin or clothing (will bleach out clothes).
c. Do not leave initiator unattended when not under refrigeration.
d. If initiator is spilled, soak up with absorbent material, such as vermiculite, and spread thinly in an isolated area.
e. Dispose of empty containers immediately. Leave cap off and split the side of this container and store away from the unit in an open area.

III. OPERATING PROCEDURES (CONTINUED)

L. Initiator Handling and Storage (Continued)

1. Safety Precautions in Handling Initiator (Continued)

f. Bring only what is necessary to the production area. Do not allow the amount in the reactor area freezers to exceed one shift's comsumption.

g. If a partial or full jug of initiator is found sitting out, it may be water, but always handle and dispose of just as if it were initiator.

h. If spilled on skin area, wash with large amounts of water.

i. If splashed in the eyes, flush with water for fifteen (15) minutes and notify your supervisor. Do not use oils or salves on the eyes.

j. Should any initiator catch on fire, use water to cool the surrounding area. However, if the fire is spreading and likely to ignite other initiator set the portable fire monitor and get out of the area, since an explosion is very likely.

2. Physical Characteristics

These Lucidol 223M75 , Trigonox EHP-C75 and Witco 939M75 must be stores at a safe temperature below 20°F to prevent rapid decomposition of the material which occurs at approximately 50°F.

III. OPERATING PROCEDURES (CONTINUED)

L. Initiator Handling and Storage (Continued)

2. Physical Characteristics (Continued)

Lupersol L-11 catalyst must be stored at a temperature not below 15°F because it freezes if stored below 15°F for extended periods of time. These types of catalyst are not self ignitied because they contain 75% product and 25% OMS, odorless mineral spirits.

3. Initiator Storage Freezers

Three walk-in freezers and one chest freezer have been installed for initiator storage at temperatures down to -30°F. Each freezer has two independent refrigeration compressors with one to be held in reserve. This is to insure continuous operation at the temperature set point. High temperature in any freezer will activate the air horn and a beacon flasher alarms.
An automatic defrost system controlled by time clocks will provide frost-free operation.

a. Operating Conditions

(1) Temperature

The temperatures are adjustable. They can be set from -30°F to +30°F.

(2) Alarms

The chest and the walk-in freezers on high temperature

III. OPERATING PROCEDURES (Cont.)

L. Initiator Handling and Storage (Cont.)

3. Initiator Storage Freezers (Cont.)

a. Operating Conditions (Cont.)

(2) Alarms (Cont.)

setting with actuate the red beacon light and air freezer. This is the same for all freezers in the plant. The alarm's present setpoint is 17°F (±2°).

(3) Compressors

The compressors for the freezers are located in two interconnected sheds 50 feet north of the freezers. The compressors for the chest freezer and the west and middle walk-in freezers are located in the west shed. The compressors for the east walk-in freezer is in the east shed.

The compressors in the west shed are numbered 1 thru 6.

(a) No. 1 and No. 2 compressors serve the middle walk-in freezer.

(b) No.3 and No. 4 compressors serve the west walk-in freezer.

(c) No.5 and No. 6 compressor serve the chest freezer on the west end.

The compressors in the east shed are numbered 7 and 8. They serve the east walk-in freezer.

III. OPERATING PROCEDURES (Cont.)

L. Initiator Handling and Storage (Cont.)

a. Operating Conditions (Cont.)

(4) Compressor Shutdown Conditions (Automatic)

(a) Freezer temperature
(b) Compressor low oil level
(c) High or low compressor pressure

(5) Circuit Breakers

(a) West Compressor Shed - Located on north wall.

(1) Compressor Panel--The compressor circuit breakers are numbered in sequence 1 thru 6.

(2) Fan Panel - The fans are numbered 2, 3, 5, and 6.

(3) Auxillary Panel - Contains lights, defrost controls, alarms, fans, and defrost time clocks.

(b) East Compressor Shed - Located on north wall.

(1) Compressor Panel - The compressor circuit breakers are numbered 1 and 2. The fans are numbered 7 and 8.

(2) Auxillary Panel - Contains lights, defrost controls, alarms, and defrost time clocks.

(6) Defrost Cycles - Adjustable

In the walk-in freezers, each compressor switches to hot gas bypass every six hours to provide a defrost cycle. This is controlled by a time clock.

(7) Freezer Capacity

(a) East walk-in freezer - 600 gallons
(b) Middle and West walk-in freezers - 550 gallons
(c) Chest freezer - 100 gallons

III. OPERATING PROCEDURES (Cont.)

L. Initiator Handling and Storage (Cont.)

4. Design and Operational Functions

Each freezer is provided with two refrigeration units each which are capable of maintaining the desired freezer temperature. Both units can be run simultaneously to allow a check on compressor operation.

The temperature element in each freezer is connected to a mercury switch which starts and stops the compressor. These are adjustable and can be set for different temperatures.

Each compressor has a timer which activates a solenoid valve in the hot gas line to send hot gas directly to the evaporator to allow for the defrost cycle. The fan normally runs with the compressor but is off during the defrost cycle. The east, middle, and west walk-in freezers defrost every six hours, and the chest freezer defrosts every eight hours. The water-cooled condensers on each compressor in the west compressor shed have water bypass to allow continuous flow and prevent freezeup during cold weather. The condensers also have inlet and outlet valves to allow for acid cleaning. Condenser cooling water is normally supplied by and returned to the cooling tower. During shutdowns and power outages, a bypass valve from the well to city water can be opened to supply water pressure. If the condensers are put on the well water, open the block valve in the manhole at the west end of the cooling tower to divert the water to the sewer.

III. OPERATING PROCEDURES (Cont.)

L. Initiator Handling and Storage (Cont.)

4. Design and Operational Functions (Cont.)

The condensers for the east walk-in freezers are air-cooled and are not tied into the cooling water system.

5. Daily Operational Checks

a. Each compressor oil level by maintenance.

b. Temperature recorders by Chief Operator.

c. Frost buildup on freezer coils by Chief Operator.

NOTE: Manual defrost instructions are on the inside front of each time clock.

NOTE: Due to the explosive nature of this initiator, formal approval must be obtained from the operations superintendent and the mechanical superintendent before any changes are made to this operation.

III. OPERATING PROCEDURES (CONTINUED)

L. Initiator Handling and Storage (Continued)

6. Emergency Procedure for Initiator Freezers

If the power should go off, do not open the freezers but do the following:

a. Notify the shift supervisor to find out the reason for the power failure.

(1) If trouble is inside the plant, the supervisor will survey the situation and estimate how long the outage will be. Freezers should hold temperature from 3-4 hours, depending on what is in them, the outside temperature, and how may times the door is opened.

(2) If trouble is dtermined to be outside the plant, the shift supervisor will notify the proper people on the call list.

(a) The duration of the outages will be determined.

(b) If outage is expected to be over three (3) hours, Joan Pope will arrange for purchase of dry ice.

b. If a compressor should fail and it is not an electrical problem, get in touch with maintenance as soon as possible.

III. OPERATING PROCEDURES (Cont.)

L. Initiator Handling and Storage (Cont.)

6. Emergency Procedure for Initiator Freezers (Cont.)

(2) If the problem cannot be fixed, try to move all initiator to other freezer. If not possible, get dry ice.

NOTE: If compressors should go out on a freezer, make sure fans are turned off to that freezer. Middle walk-in freezer 1 and 2 fans, west walk-in freezer 3 and 4 fans, and chest freezer 5 and 6 fans in the west compressor shed. The east walk-in freezer 7 and 8 fans located in the east compressor shed.

c. Notify the following if an emergency should arise with the initiator freezers:

Jim Barton - 369-4755
Pete Markey - 369-6019

7. Circle Chart Responsibility and Change Schedule

a. The Chief Operator on each shift will check the charts to be sure they have ink and are rotating.

b. The Chief Operator on the 7 P.M. - 7 A.M. shift will place new charts in the recorder and turn in the previous day's chart to the shift supervisor.

III. OPERATING PROCEDURES (CONTINUED)

M. Reactor Pressure Check

Prior to the startup of a reactor after an extended outage or following a maintenance outage such as replacing a main dump valve or rodding out the condenser tubes, the reactor must be hydrostatically pressure checked. This is to insure that no leakage occurs at the reactor, either inward or outward.

Procedure

1. The lead operator sets up the pressure check as follows:
   a. Place the reactor mode in "emergency" to gain use of both the charge water valve and the rinse valves.
   b. Open both hot water charge pump discharge valves CV-849 and CV-829.
   c. Open the reactor charge water valve.
   d. Open the main dump valve.
   e. Open the emergency vent valve.
2. The lead operator then turns on both hot water charge pumps and fills the reactor.
3. The "A" operator stands by to notify the lead operator when water comes out the atmospheric vent, showing that the reactor is full.
4. The lead operator then shuts down the hot water charge pumps and closes all valves. This must be done immediately to avoid overpressuring the reactor and blowing the rupture discs.

III. OPERATING PROCEDURES (CONTINUED)

M. Reactor Pressure Check (Continued)

Procedure (Continued)

5. The "A" operator then increases the reactor pressure by charging water into the reactor through the initiator injection system.
6. The lead operator monitors the reactor pressure from the control room and instructs the "A" operator to shut off water addition when the pressure reaches 130 psig.
7. The "A" operator then checks the reactor for leaks at the reactor bottom and top side. If a flange or gasket has been changed, check these very closely.
8. The lead operator then monitors the reactor pressure. If the reactor holds 130 psig for ten minutes, the pressure check is terminated. If the reactor loses pressure, instruct the "A" operator to bring the pressure back up to 130 psig with the high pressure service water and reinspect the reactor for leaks.

   NOTE: Do not charge a reactor that will not hold pressure.
9. When the pressure check is completed, the lead operator dumps the water in the reactor to the sewer. The reactor is now ready to start evacuation procedure.

III. OPERATING PROCEDURES (CONTINUED)

N. Reactor Cleaning and Entry

1. Reactor Manhead Opening Procedures

One of the most critical parts of the operator's job is the opening of the reactor Lenape* manhead. Following is a list of procedures that must be followed by the "A" operator or anyone else when opening a reactor manhead.

Procedure

a. Check the pressure gauge and/or bleed valve for pressure or vacuum.

b. Put on continuous flow fresh air mask.

c. Unlatch Lenape* lock on Lenape* manhead roll-bar and drop down.

NOTE: If the reactor has pressure when the roll-bar arm is lifted, the pressure will start escaping. If this should happen, notify the lead operator.

d. Slowly raise manhead four to six inches and hold in that position.

e. Call lead operator and have him cut on the reactor evacuation ejector to pull air inward through the manhead.

f. Finish raising the manhead.

g. The continuous flow fresh air mash may be removed at this time.

h. Change "O" ring on manhead.

*Registered Trademark

III. OPERATING PROCEDURES (CONTINUED)

N. Reactor Cleaning and Entry (Continued)

1. Reactor Manhead Opening Procedures (Continued)

i. If the bottom manhead is to be opened, inspect the bottom of the reactor through the open manhead. The reactor should contain no liquids.

j. Go to the bottom of the reactor and make sure that the safety chain and jacking bolts are in proper position on the bottom manhead.

k. Maintenance will remove the bolts and open the manhead.

2. Reactor Cleaning and Entry

This section will cover precaustions taken prior to entry and during entry and cleaning of the reactor. The following is a check list stating conditions which must be met by anyone entering the reactor. The equipment entry sheet is to be filled out and placed at the reactor.

Procedure

a. The reactor must be empty/steam stripped, recovered and flushed with water.

b. The O_2 content must be greater than 20 percent.

c. The VCM content myst be less than 10 ppm.

d. The top and bottom manways myst be open.

e. The nitric oxide (NO) piping myst be disconnected at the bottles.

III. OPERATING PROCEDURES (CONTINUED)

N. Reactor Cleaning and Entry (Continued)

2. Reactor Cleaning and Entry (Continued)

Procedure (Continued)

f. The following lines must be blanked or disconnected.

(1) Main eight-inch dump line.

(2) Four-inch steam stripping lines.

(3) Six-inch condenser lines.

(4) Four-inch chem wash and rinse line to condenser*

(5) Four-inch chem wash and rinse line to reactor*

(6) One-inch initiator injection line.

(7) One-inch inerts vent.

(8) Three-inch colloid charge line.

(9) One-inch sample line.

(10) Six-inch VCM charge line - D-745 only.

g. Lock out and tag agitator breaker.

h. Test agiator switch

i. Special precautions and safety equipment that may be needed are:

(1) Impervious suit

(2) Plastic mats on the bottom dish to prevent slipping.

(3) Continuous flow fresh air mask

*When preparing to blank or remove blank in chem wash line, lock out cleaning solution pump, open chem wash line to reactor, and bleed line at discharge of pump before breaking chem wash flange.

III. OPERATING PROCEDURES (CONTINUED)

2. Reactor Cleaning and Entry (Continued)

Procedure (Continued)

(4) Rubber gloves

(5) Scaffolding for work above bottom level.

(6) Two-way radio communication plus manway watch.

(7) Safety harness and rope.

(8) 12 volt explosion proof lights.

III. OPERATING PROCEDURES (CONTINUED)

N. Reactor Cleaning and Entry (Continued)

2. Reactor Cleaning and Entry (Continued)

j. While cleaning the buildups from the baffles and blade, take extreme care not to scratch the reactor walls. These walls have been polished to eliminate giving the resin being formed during reaction a place to create a buildup. NEVER SCRAPE THE WALLS.

k. Around the shaft at the bottom of each reactor is a carbon throttle bushing. The purpose of the throttle bushing is to protect the reactor seal from resin. The seal water flush will not be effective if the throttle bushing or holder is damaged. If there is any buildup in this area, it is the Maintenance Department's responsibility to remove it. Operators are NOT to clean the throttle bushing. Damage to the throttle bushing may cause seal failure.

l. If hammer and chisel are required to clean the reactor, be careful of chisel placement to avoid it kicking back out of the buildup and causing personal injury.

m. While in the reactor, check the safety discs for buildups, nozzles for plugs, and the bottom of the condenser for plugging.

n. When internal job is completed, remove scaffolding from the reactor and store neatly. Remove any loose buildup on the reactor bottom and close the bottom manhead.

o. Clean up any debris, rags, etc. The job is never complete until the area is clean.

III. OPERATING PROCEDURES (CONTINUED)

O. Housekeeping Guidelines

Good housekeeping is a major portion of any task to be undertaken, and no task can be called complete until the work area has been cleaned. Return all tools and materials used to their proper place and do not leave lying around to create a safety hazard.

The housekeeping of the reactor area is the responsibility of all people working there.

EQUIPMENT INDEX

IV. EQUIPMENT INDEX

A. Reactors

1. Polymerization Reactors 45-741, 45-742, 45-743, and 45-744

a. Purpose

Vessel used to react VCM to PVC in a water suspension.

b. Description

Vertical-mounted, bottom-agitated vessel, 12-foot diameter by 22-foot straight wall height (28 feet overall height), jacketed, and with top-mounted condenser. The reactor is stainless steel, and the cooling water and steam jacket is carbon steel. Approximate capacity is 22,500 gallons.

c. Normal Operating Conditions

The reactor produces various resin types, operating in a pressure range of 28.5 inches Hg vacuum to 150 psig and a temperature range of 80-225°F.

d. Design Conditions

	Shell	Jacket
Temperature, °F	250	200
Pressure, psig	200 (and full vacuum)	30

2. Polymerization Reactors 45-781

a. Purpose

Vessel used to react VCM to PVC in water suspension.

b. Description

Vertical-mounted, bottom-agitated vessel, diameter by 28-foot straight wall height (35 feet overall height), jacketed and

IV. EQUIPMENT INDEX (Cont.)

A. Reactors (Cont.)

2. Polymerization Reactors 45-781 (Cont.)

b. Description (Cont.)

with top-mounted condenser. The reactor is stainless steel, and the cooling water and steam jacket is carbon steel Approximate capacity is 30,000 gallons.

c. Normal Operating Conditions

The reactor produces various resin types, operating in a pressure range of 28.5 inches Hg vacuum to 150 psig and a temperature range of 80 - 225°F.

d. Design Conditions

	Shell	Jacket
Temperature, °F	250	200
Pressure, psig	FV-225	45

B. Heat Exchangers

1. Reactor Condensers 55-328, 55-329, 55-330, and 55-331

a. Purpose

To remove the heat of reaction from the polymerization reactor by condensing VCM vapor.

b. Description

Each of the reactor condensers are vertical, mounted on top of the polymerization reactors. Cooling water (shell side) is used to condenser VCM (tube side). Each condenser has 2,100 square foot surface area provided by 999 tubes which are eight feet long by one-inch diameter. Materials of construction

IV. EQUIPMENT INDEX (Cont.)

B. Heat Exchangers (Cont.)

b. Description (Cont.)

are stainless steel or stainless steel clad for all surfaces in contact with VCM.

c. Normal Operating Conditions

Condensers operate in a temperature range of 80-225°F and pressure range of 28.5 inches Hg vacuum to 150 psig during the reactor cycle.

d. Design Conditions

	Shell	Tubes
Temperature, °F	200	250
Pressure, psig	120	200 (and full vacuum)

2. Reactor Condenser 55-358

a. Purpose

To remove the heat of reaction from the polymerization by condensing VCM vapor.

b. Description

Condenser is vertical, mounted on top of the polymerization reactors. Cooling water (shell side) is used to condense VCM (tube side). Each condenser is provided with 2700 tubes which are ten feet long by one-inch diameter. Materials of construction are stainless steel and stainless steel clad for all surfaces in contact with VCM.

IV. EQUIPMENT INDEX (Cont.)

B. Heat Exchangers (Cont.)

2. Reactor Condenser 55-358 (Cont.)

c. Normal Operating Conditions

Condensers operate in a temperature range of 80-225°F and a pressure range of 28.5 inches Hg vacuum to 150 psig during the reactor cycle.

d. Design Conditions

	Shell	Tubes
Temperature, °F	250	250
Pressure, psig	120	FV-225

3. Hot Water Preheater 55-332

a. Purpose

To heat process water to 145°F before it enters the hot water tank, 45-748.

b. Description

Horizontal shell and tube type exchanger with steam on the shell side and water on the tube side. Surface area of 331 square feet is provided by 64 tubes 20 feet long by one-inch diameter. The tubes are stainless steel, and the shell is carbon steel.

c. Normal Operating Conditions

Steam temperature and pressure on the shell side will vary. Water on the tube side will be around 50 psig and will enter near 60°F and exit at 145°F.

IV. EQUIPMENT INDEX (Cont.)

B. Heat Exchangers (Cont.)

3. Hot Water Preheater 55-332 (Cont.)

d. Design Conditions

	Shell	Tube
Temperature, °F	400	400
Pressure, psig	175	200

4. Hot Water Tank Heater 55-333

a. Purpose

To maintain water temperature in hot water tank 45-748.

b. Description

External plate coil type heat exchanger that will be clamped outside the hot water tank; stainless steel construction.

c. Normal operating Conditions

Steam in the coil should be around 341°F and 150 psig. Water in the hot water tank should be near 160°F.

d. Design Conditions

400°F and 175 psig.

5. Water Recirculation Cooler 55-334

a. Purpose

To cool the recirculation water in recovery knockout drum 45-760.

b. Description

Horizontal mounted, shell and tube type heat exchanger. Cooling water is on the shell side and recirculating water is on the tube side. Surface area of 1,441 square feet is provided by 466 tubes, 16 feet long by 3/4-inch diameter. The tubes are stainless steel and the shell is carbon steel.

VAB.0001146727

IV. EQUIPMENT INDEX (Cont.)

B. Heat Exchangers (Cont.)

4. Water Recirculation Cooler 55-334 (Cont.)

c. Normal Operating Conditions

d. Design Conditions

	Shell	Tube
Temperature, °F	450	400
Pressure, psig	150	150

5. Seal Water Coolers 55-335 and 55-336

a. Purpose

To cool the circulating vacuum pump and compressor seal water.

b. Description

Horizontal-mounted shell and tube type heat exchanger. Cooling water is on the shell side and recirculating seal water is on the tube side. Surface area of 339 square feet is provided by 182 tubes 10 feet long by 3/4-inch diameter. The tubes are stainless steel and the shell is carbon steel.

c. Normal Operating Conditions

d. Design Conditions

	Shell	Tube
Temperature, °F	200	380
Pressure, psig	150	150

6. Recovered VCM Condensers 55-337 and 55-338

a. Purpose

To condense VCM vapor during recovery as it is removed from the polymerization reactors.

IV. EQUIPMENT INDEX (CONTINUED)

B. Heat Exchangers (Continued)

c. Normal Operating Conditions

Steam temperature and pressure on the shell side will vary. Cleaning solution on the tube side is estimated to enter at 175°F and leave at 190°F with a pressure of 125 psig.

d. Design Conditions

	Shell	Tube
Temperatue, °F	175	200
Pressure, psig	400	400

C. Tanks and Vessels

1. Instrument Air Capacity Tank 45-301

a. Purpose

To provide adequate instrument air during periods of high demand and temporarily supply air during instrument air failure.

b. Description

Vertical-mounted, five-foot nine-inch straight wall height, four-foot diameter, carbon steel construction.

c. Normal Operating Conditions

100 psig and 80°F

d. Design Conditions

IV. EQUIPMENT INDEX (CONTINUED)

C. Tanks and Vessels (Continued)

2. Recovered VCM Storage Tanks 45-317 and 89-520

a. Purpose

Storage of recovered VCM and charge tank for recovered VCM.

b. Description

Vertical-mounted, 18-foot straight wall height, 22-foot overall height, eight-foot diameter with an approximate capacity of 7,200 gallons, carbon steel construction

c. Normal Operating Conditions

Ambient temperature and 20-70 psig.

3. Water Stripper 45-319

a. Purpose

To provide for collection and recovery of various VCM containing vapor vents and waste waters.

b. Description

Horizontal-mounted, 26-foot straight wall length, six-foot diameter, approximate capacity 5,500 gallons, carbon steel construction.

c. Normal Operating Conditions

Ambient temperature to 150°F and pressure from 10 inches Hg vacuum to 10 psig.

d. Design Conditions

350°F and full vacuum to 150 psig.

IV. EQUIPMENT INDEX (CONTINUED)

C. Tanks and Vessels (Continued)

4. Fresh VCM Storage Tank 45-745

a. Purpose

VCM storage tank which holds fresh VCM used in reactor charge.

b. Description

Vertical-mounted, 22-foot straight wall height, 26-foot overall height, eight-foot diameter with an approximate capacity of 8,700 gallons, carbon steel construction.

c. Normal Operating Conditions

Ambient temperature and 20-70 psig.

d. Design Conditions

150°F and full vacuum to 150 psig.

5. Hot Water Tank 45-748

a. Purpose

To supply a large volume of hot water for reactor charge and rinse.

b. Description

Vertical, cone roof, 42-foot straight wall height, 12-foot diameter with an approximate capacity of 35,000 gallons, aluminum construction.

c. Normal Operating Conditions

Atmospheric pressure and 160°F.

d. Design Conditions

212°F and 1.5 inches of water.

IV. EQUIPMENT INDEX (Cont.)

C. Tanks and Vessels (Cont.)

6. 1. Initiator Injection Pot 45-750

a. Purpose

To inject initiator into the reactor during charge.

b. Description

Vertical-mounted, two-foot straight wall height with one-foot diameter, approximate capacity 12 gallons, stainless steel construction.

c. Normal Operating Conditions

Temperature near 70°F and 180-260 psig.

d. Design Conditions

150°F and 300 psig.

2. Initiator Injection Pot 45-784

a. Purpose

To inject initiator into the reactor during charge.

b. Description

Vertical-mounted, two foot straight wall height with one and one-half foot diameter, approximate capacity 30 gallons, stainless steel construction.

c. Normal Operating Conditions

Temperature near 70°F and 180-260 psig.

d. Design Conditions

300 °F and 450 psig

IV. EQUIPMENT INDEX (Cont.)

C. Tanks and Vessels (Cont.)

7. Colloid Makeup Tank 45-751

a. Purpose

To provide for consistent colloid solution makeup.

b. Description

Top agitated, vertical-mounted, flat top, 11 1/2-foot straight wall height, seven-foot diameter, approximate capacity 3,300 gallons, bottom jacket for heating, side jacket for cooling, stainless steel construction.

c. Normal Operating Conditions

Atmospheric pressure and 70-200°F.

d. Design Conditions

400 ^{o}F and 0 psig

IV. EQUIPMENT INDEX (CONTINUED)

C. Tanks and Vessels (Continued)

8. Colloid Storage Tank 45-752

a. Purpose

To provide colloid solution storage.

b. Description

Vertical-mounted, flat top, cone bottom, 12-foot straight wall height, seven-foot diameter, approximate capacity 3,400 gallons, stainless steel construction.

c. Normal Operating Conditions

Atmospheric pressure and 70-85°F.

d. Design Conditions

150°F and 0 psig

9. Colloid Charge Tank 45-753

a. Purpose

To provide a sufficient quantity of quality colloid solution for charge.

b. Description

Vertical-mounted, flat top, cone bottom, 14-foot straight wall height, 5 1/2-foot diameter, capacity approximately 2,400 gallons, stainless steel construction.

c. Normal Operating Conditions

Atmospheric pressure and 70-85°F.

d. Design Conditions

150°F and 0 psig

IV. EQUIPMENT INDEX (CONTINUED)

C. Tanks and Vessels (Continued)

10. Seal Oil Storage Drum 45-754

a. Purpose

To provide seal oil storage.

b. Description

Horizontal-mounted, five-foot straight wall length by three-foot diameter, carbon steel construction, approximate capacity 270 gallons.

c. Normal Operating Conditions

Atmospheric pressure, ambient temperature.

d. Design Conditions

150°F and 0 psig

11. AMS Short Stop Charge Pots 45-755, 45-756, 45-757, and 45-758

a. Purpose

To provide a means for injecting short stop solution into any or all of the reactors to stop the reaction.

b. Description

Vertical-mounted, two-foot straight wall height, six-inch diameter, capacity approximately three gallons, stainless steel construction.

c. Normal Operating Conditions

Approximately 70°F and 180-260 psig.

d. Design Conditions

150°F and 300 psig

IV. EQUIPMENT INDEX (CONTINUED)

C. Tanks and Vessels (Continued)

12. Mechanical Seal Purge Water Surge Drum 45-759

a. Purpose

To provide seal purge water in the event of electrical power failure.

b. Description

Vertical-mounted, seven-foot straight wall height, 3 1/2-foot diameter, capacity approximately 500 gallons, stainless steel construction.

c. Normal Operating Conditions

Approximately 70°F and 200 psig.

d. Design Conditions

150°F and 300 psig

13. Recovery Knockout Drums 45-760 and 45-761

a. Purpose

To prevent liquid and solids carryover to the recovery vacuum pumps and compressors during reactor recovery.

b. Description

Vertical-mounted; bottom section has five-foot straight wall height; five-foot diameter; top section has ten-foot straight wall height; three-foot diameter; top section has water spray to help remove carryover; carbon steel construction.

IV. EQUIPMENT INDEX (CONTINUED)

C. Tanks and Vessels (Continued)

c. Normal Operating Conditions

100-200°F and 0-35 psig

d. Design Conditions

300°F and full vacuum to 150 psig

14. Seal Water Separators 45-762 and 45-763

a. Purpose

To separate the circulating vacuum pump and compressor seal water from the recovered VCM vapor.

b. Description

Vertical-mounted, seven-foot straight wall height, four-foot diameter, approximate capacity 650 gallons, carbon steel construction.

c. Normal Operating Conditions

100-150°F and 40-80 psig

d. Design Conditions

300°F and full vacuum to 150 psig

15. Recovered VCM Collect Tank 45-764

a. Purpose

To collect recovered VCM and provide liquid head for VCM transfer pump to allow pumping of recovered VCM to recovered VCM storage tank.

IV. EQUIPMENT INDEX (CONTINUED)

C. Tanks and Vessels (Continued)

b. Description

Horizontal-mounted, ten-foot straight wall length, three-foot diameter, approximate capacity 520 gallons, carbon steel construction.

c. Normal Operating Conditions

70-100°F and 35-75 psig

d. Design Conditions

160°F and full vacuum to 150 psig

16. Hydroquinone Storage Tank 45-765

a. Purpose

Provide for hydroquinone storage and makeup.

b. Description

Top-agitated, vertical-mounted, 2'6" straight wall height, two-foot diameter, approximate capacity 60 gallons, carbon steel construction.

c. Normal Operating Conditions

Temperature near ambient; pressure about 1 psig.

d. Design Conditions

150°F and 16 psig

IV. EQUIPMENT INDEX (CONTINUED)

C. Tanks and Vessels (Continued)

17. Slurry Dump Tank 45-766

a. Purpose

To provide sufficient head for the slurry transfer pumps to operate correctly.

b. Description

Vertical-mounted, flat top, cone bottom, three-foot straight wall height, five-foot diameter, approximate capacity 440 gallons, stainless steel construction.

c. Normal Operating Conditions

One-inch water vacuum and 150-200°F.

d. Design Conditions

250°F and two-inch water pressure.

18. Cleaning Solution Tank 45-767

a. Purpose

To provide an adequate amount of chem wash solution during reactor chem wash.

b. Description

Vertical-mounted, flat top, cone bottom, ten-foot straight wall height, ten-foot diameter, approximate capacity 5,800 gallons, carbon steel construction.

c. Normal Operating Conditions

Atmospheric pressure and 60-190°F

d. Design Conditions

250°F and ± five-inch water pressure.

IV. EQUIPMENT INDEX (CONTINUED)

C. Tanks and Vessels (Continued)

19. Reactor Evacuation Ejector Cyclone Separator 45-768

a. Purpose

To remove any condensate present in the motive steam to the reactor evacuation steam ejector.

b. Description

High efficiency horizontal separator, Anderson type L5-4-175, 10 3/4-inch outside diameter, 26 inches long, carbon steel construction with stainless steel internal baffles.

c. Normal Operating Conditions

Steam in is 125 psig and 353°F.

d. Design Conditions

400°F and 175 psig

20. Reactor Sampling Bomb 45-770

a. Purpose

To safely obtain a resin sample from the reactor.

b. Description

3/4-inch stainless steel pipe, three inches long. One end is capped, and the other is fitted with a coupling. A basket strainer fits inside the sampler for easy resin removal.

c. Normal Operating Conditions

Slight vacuum to 60 psig and 70-140°F.

IV. EQUIPMENT INDEX (Cont.)

C. Tanks and Vessels (Cont.)

21. AMS Emergency Kill Pots 45-786

a. Purpose

To inject AMS into the reactor during power failure or upon loss of agitation.

b. Description

Vertical-mounted, three-foot straight wall height, two feet in diameter, capacity approximately 60 gallons, carbon steel construction.

c. Normal Operating Conditions

Approximately 70°F and 300 psig.

d. Design Conditions

150°F and 400 psig.

IV. EQUIPMENT INDEX (CONTINUED)

D. Filters

1. Process Water Charge Filter 64-716

a. Purpose

To remove dirt and scale from the charge water.

b. Description

Filterite Model 88MS04-316-4FD-C300, cartridge type, stainless steel.

c. Normal Operating Conditions

40 psig and 70°F

d. Design Conditions

300 psig and 200°F. Particle retention size is ten microns.

2. VCM Charge Filters 64-718 and 64-742

a. Purpose

To remove any PVC particles from the VCM charge to the reactor.

b. Description

Filterite model 906415-001, cartridge type, stainless steel filter with polypropylene filtering element.

c. Normal Operating Conditions

150-200 psig and ambient temperature.

d. Design Conditions

150°F, 300 psig, 1,000 gpm, particle retention size is ten microns.

IV. EQUIPMENT INDEX (CONTINUED)

D. Filters (Continued)

3. Recovered VCM Filter 64-719

a. Purpose

To remove PVC particles from the recovered VCM charge to the reactor.

b. Description

Filterite Model 909596, cartridge type, stainless steel filter with polypropylene filtering element.

c. Normal Operating Conditions

40-130 psig and ambient temperature.

d. Design Conditions

150°F, 190 psig, 250 gpm, particle retention size ten microns.

4. Process Water Filter 64-720

a. Purpose

To remove dirt and scale from process water to the hot water tank.

b. Description

Dollinger Model LL-122-280, cartridge type, carbon steel filter with polypropylene filtering element.

c. Normal Operating Conditions

40 psig and 70°F

d. Design Conditions

100°F, 100 psig, 200 gpm, particle retention size ten microns.

IV. EQUIPMENT INDEX (CONTINUED)

D. Filters (Continued)

5. Colloid Makeup Water Filter 64-721

a. Purpose

To remove dirt and scale from water used in colloid makeup.

b. Description

Dollinger Model LL-222-180, Series 150, cartridge type, stainless steel filter, cotton filtering element.

c. Normal Operating Conditions

40 psig and 70°F

d. Design Conditions

250°F, 250 psig, 125 gpm, particle retention size ten microns.

6. Service Water Filter 64-724

a. Purpose

To remove dirt and scale from service water.

b. Description

Dollinger Model LL-222-280, cartridge type, stainless steel filter with cotton filtering element.

c. Normal Operating Conditions

40 psig and 70°F

d. Design Conditions

100°F, 100 psig, 190 gpm, particle retention size ten microns.

IV. EQUIPMENT INDEX (CONTINUED)

D. Filters (Continued)

7. Seal Oil Supply Filters 64-725 and 64-726

a. Purpose

Removes dirt and scale from seal oil.

b. Description

Dollinger Model LL-222-39, Series 150, cartridge type, stainless steel filter with cotton filtering element.

c. Normal Operating Conditions

245 psig and 100°F

d. Design Conditions

150°F, 275 psig, 4 gpm, particle retention size one micron.

8. Seal Oil Return Filters 64-727 and 64-728

a. Purpose

Removes dirt and scale from seal oil.

b. Description

Dollinger Model LL-222-39, Series 150, cartridge type, stainless steel filter with cotton filtering elements.

c. Normal Operating Conditions

220 psig and 100°F

d. Design Conditions

150°F, 275 psig, 4 gpm, particle retention size one micron.

IV. EQUIPMENT INDEX (CONTINUED)

D. Filters (Continued)

9. Seal Water Filters 64-731 and 64-732

a. Purpose

To remove PVC resin from the circulating seal water for the recovery vacuum pumps and compressors.

b. Description

Dollinger Model LL-122-140, cartridge type, carbon steel filter with polypropylene filtering element.

c. Normal Operating Conditions

90-130 psig and 100-150°F

d. Design Conditions

300°F, 150 psig, 160 gpm, particle retention size 100 microns.

10. Slurry Strainer 64-733

a. Purpose

To remove large resin particles from the slurry.

b. Description

Sweco Model LS605 1210, vibrating screen, stainless steel filter and filtering element.

c. Normal Operating Conditions

One-inch water vacuum and 150-200°F

d. Design Conditions

250°F, two-inch water pressure, 1,000 gpm, particle retention on four-mesh screen.

IV. EQUIPMENT INDEX (CONTINUED)

D. Filters (Continued)

11. Cleaning Solution Strainer 64-734

a. Purpose

To remove PVC particles from the cleaning solution.

b. Description

Ten-inch Elco line strainer, carbon steel construction.

c. Normal Operating Conditions

2 psig and 180°F

d. Design Conditions

200°F, 20 psig, 500 gpm, particle retention on four-mesh screen.

12. Breathing Air Filters 64-735, 64-736, 64-737, 64-738, 64-739, 64-740

a. Purpose

To remove dirt and scale from the breathing air.

b. Description

Dollinger Model GP-246-15, cartridge type, stainless steel filter, Nylon 147 filtering element.

c. Normal Operating Conditions

70-90 psig and 60-70°F

d. Design Conditions

100°F, 125 psig, 6,000 standard cubic feet per hour (SCFH), particle retention size five microns.

IV. EQUIPMENT INDEX (Cont.)

D. Filters (Cont.)

13. Blowdown Tank Drain Strainer 64-741

a. Purpose

To remove PVC particles in water dumped to the sewer from the blowdown tank.

b. Description

Andale type 105 simplex strainer, basket strainer, cast iron with stainless steel filtering element.

c. Normal Operating Conditions

8-9 psig and 100 150°F

d. Design Conditions

200°F, 125 psig, 200 gpm, particle retention size 3/8 inch.

IV. EQUIPMENT INDEX (CONTINUED)

E. Pumps

1. VCM Charge Pumps 72-875 and 72-876

a. Purpose

To supply reactors with VCM during charge.

b. Description

Centrifugal type, Goulds Model 3736, 3X6-13DV, Group L, 150-HP, 3,560 RPM. The casing is carbon steel and the impeller is cast iron.

c. Normal Operating Conditions

Rated for 800 gpm at 450 feet of differential head.

2. Recovered VCM Charge Pumps 72-877 and 72-878

a. Purpose

To supply recovered VCM to the suction of the VCM charge pumps during charge.

b. Description

Centrifugal type, Goulds Model 3196 MT, 2X3-13, 25 hp 1,750 rpm. The casing is stainless steel and the impeller is cast iron.

c. Normal Operating Conditions

Rated for 450 gpm at 82 feet of differential head.

IV. EQUIPMENT INDEX (CONTINUED)

E. Pumps (Continued)

3. Hot Water Charge Pumps 72-879 and 72-880

a. Purpose

To supply the reactor with hot water during charge.

b. Description

Centrifugal type, Goulds Model 3196 LTC, 2X3-13, 100-HP, 3,550 rpm. The casing is stainless steel and the impeller is cast iron.

c. Normal Operating Conditions

Rated for 450 gpm at 410 feet of differential head.

4. Colloid Batch Transfer Pump 72-881 and Colloid Circulation Pump 72-882

a. Purpose

The batch transfer pump is used primarily to transfer colloid from the colloid makeup tank to the colloid storage tank. The colloid circulation pump is used primarily to circulate colloid in the storage tank and to transfer colloid from the storage tank to the colloid charge tank. These pumps are piped so they can be used to spare each other.

b. Description

Centrifugal type, Goulds Model 3196 MT, 1X2-10, 3-HP, 1,750 rpm. The casing and impeller are stainless steel.

c. Normal Operating Conditions

Rated for 50 gpm at 69 feet differential head.

IV. EQUIPMENT INDEX (CONTINUED)

E. Pumps (Continued)

5. Colloid Charge Pumps 72-883 and 72-884

a. Purpose

Used to charge colloid to the reactor.

b. Description

Centrifugal type, Goulds Model 3736, 1X2-11B, 50-HP, 3,550 rpm. The casing and impeller are stainless steel.

c. Normal Operating Conditions

Rated for 100 gpm at 470 feet differential head.

6. High Pressure Service Water Pumps 72-885 and 72-886

a. Purpose

To provide high pressure water for a variety of uses.

b. Description

Centrifugal type, Goulds Model 3196 LTC, 2X3-13, 60-HP, 3,550 rpm. The casing and impeller are stainless steel.

c. Normal Operating Conditions

Rated for 150 gpm at 415 feet of differential head.

7. Mechanical Seal Purge Water Pumps 72-887 and 72-888

a. Purpose

To supply high pressure water to the reactor agitator seals and the reactor cleaning nozzle flush.

b. Description

Centrifugal type, Goulds 3196 MT, 1X2-10, 30-HP, 3,500 rpm. The casing and the impeller are stainless steel.

IV. EQUIPMENT INDEX (CONTINUED)

E. Pumps (Continued)

c. Normal Operating Conditions

Rated for 40 gpm at 415 feet of differential head.

8. Water Recirculation Pumps 72-889 and 72-890

a. Purpose

To circulate water in the recovery knockout drums.

b. Description

Centrifugal type, Goulds Model 3196 MT, 2X3-10, 7 1/2 HP, 1,750 rpm. The casing is stainless steel and the impeller is cast iron.

c. Normal Operating Conditions

Rated for 200 gpm at 68 feet differential head.

9. Seal Water Pumps 72-891 and 72-892

a. Purpose

To circulate the seal water used by the recovery vacuum pumps and compressors.

b. Description

Centrifugal type, Goulds Model 3196 MT, 2X3-10, 10-HP, 1,750 rpm. The casing is stainless steel and the impeller is cast iron.

c. Normal Operating Conditions

Rated for 160 gpm at 94 feet of differential head.

IV. EQUIPMENT INDEX (CONTINUED)

E. Pumps (Continued)

10. Recovered VCM Transfer Pumps 72-893 and 72-894

a. Purpose

To transfer recovered VCM from the recovered VCM collect tank to a recovered VCM storage tank.

b. Description

Centrifugal type, Goulds Model 3196 MT, 1X2-10, 3-HP, 1,750 rpm. The casing is stainless steel and the impeller is cast iron.

c. Normal Operating Conditions

Rated for 50 gpm at 75 feet of differential head.

11. Hydroquinone Injection Pump 72-895

a. Purpose

To supply hydroquinone solution for injection into recovery system seal water during reactor recovery.

b. Description

Reciprocating type, Milton-Roy Model DB-1-30R, 1/4 HP, 1,750 rpm, carbon steel construction.

c. Normal Operating Conditions

0.081 gph at approximately 282 feet of differential head.

12. Slurry Transfer Pumps 72-896 and 72-897

a. Purpose

To transfer slurry from the reactor to the slurry blend tanks.

IV. EQUIPMENT INDEX (CONTINUED)

E. Pumps (Continued)

b. Description

Centrifugal type, Goulds Model 3196 MT, 4X6-13, 40-HP, 1,770 rpm. The casing and impeller are stainless steel.

c. Normal Operating Conditions

Rated for 600 gpm at 126 feet of differential head.

13. Cleaning Solution Pumps 72-898 and 72-899

a. Purpose

To supply chem wash solution to the reactors during chem wash.

b. Description

Centrifugal type, Durco Model Mark II, Group II, 4X3-10/80, 75-HP, 3,550 rpm, stainless steel casing and impeller.

c. Normal Operating Conditions

Rated for 500 gpm at 165 feet of differential head.

14. Blowdown Tank Pump 72-900

a. Purpose

To pump water which has been stripped of VCM from the blowdown tank to the sewer.

b. Description

Centrifugal type, Durco Model Mark II, Group II, 4X3-10/84, 7 1/2 HP, 1,750 rpm. The casing is stainless steel and the impeller is cast iron.

c. Normal Operating Conditions

Rated for 200 gpm at 63 feet of differential head.

IV. EQUIPMENT INDEX (CONTINUED)

F. Compressors and Fans

1. Recovery Vacuum Pumps 72-901 and 72-902

a. Purpose

To recover unreacted VCM from the polymerization reactors.

b. Description

Bingham Model 4G-M, 75-HP, 1,200 rpm. Constant volume liquid ring with a water seal. The liquid ring is driven by a multivaned impeller in a circular pumpcase. Construction is cast iron casing and ductile iron impeller.

c. Normal Operating Conditions

24 inches Hg vacuum to 7 psig inlet, 0-10 psig dishcarge, and 100-150°F.

2. Recovery Compressors 72-903, 72-904, and 72-905

a. Purpose

To recover unreacted VCM from the polymerization reactors.

b. Description

Nash Model 1256, 150-HP, constant volume liquid ring with water seal. The liquid ring is driven by a multivaned impeller in a circular pumpcase. Construction is cast iron casing and stainless steel impeller.

c. Normal Operating Conditions

0-35 psig inlet, 40-80 psig outlet, and 100-150°F.

IV. EQUIPMENT INDEX (CONTINUED)

F. Compressors and Fans (Continued)

3. Slurry Strainer Exhauster 49-368

a. Purpose

To keep personnel exposure to VCM vapors to a minimum.

b. Description

Centrifugal fan, Buffalo Forge Model 365 DL, 3-HP, 1,800 rpm, stainless steel construction.

c. Normal Operating Conditions

Near atmospheric pressure and 150-200°F.

G. Agitators

1. Reactor Agitators 51-101, 51-102, 51-103, and 51-104

a. Purpose

To keep the colloid, VCM, and water in the reactor well mixed.

b. Description

Bottom entering, single speed, four blades at 45° angle, 200-HP, 125 rpm, stainless steel construction.

c. Normal Operating Conditions

15,000 gallons of liquid or slurry in vertical vessel, 22-foot straight wall by 12-foot diameter, at about 120°F and 130 psig.

IV. EQUIPMENT INDEX (CONTINUED)

G. Agitators (Continued)

2. Colloid Makeup Tank Agitator 51-105

a. Purpose

To provide agitation needed to dissolve F-50 methocel in water.

b. Description

Top entering, single speed, "Lightnin" Model 73-Q-5, 5-HP, 1,750 rpm. Wetted parts are stainless steel.

c. Normal Operating Conditions

3,000 gallons of colloid solution; tank is vertical; seven-foot diameter by 11'6" tall; temperature ranges from 70-250°F and atmospheric pressure.

3. Hydroquinone Storage Tank Agitator 51-106

a. Purpose

To provide agitation needed to dissolve hydroquinone powder in water.

b. Description

Top entering, single speed, "Lightnin" Model N33-33, 1/3-HP, 1,750 rpm.

c. Normal Operating Conditions

Approximately fifty gallons hydroquinone solution in vertical tank 2'6" high by two-foot diameter, 1 psig, and 70°F.

IV. EQUIPMENT INDEX (CONTINUED)

H. Package Units

1. Seal Oil Pressure Units 95-299 and 95-300

a. Purpose

To supply seal oil to the reactor agitator seals at the required temperature and pressure.

b. Description

Dura circulator Model SWAR-40-25.

c. Normal Operating Conditions

245-250 psig, 100-150°F. The seal oil is Di(2-Ethylhexy) phthalate (DOP) which has a viscosity of 35 cp.

INSTRUMENT INDEX

V. INSTRUMENT INDEX

A. Flow Controllers

Item No.	Service	Type	Set Point
FIRC-710 FIRC-711 FIRC-712 FIRC-713 FRC-201	Reactor Cooling Water Flow Controllers	Meter run with orifice plate, board-mounted indicators and recorders.	Cascade control; the temperature controller of each reactor sets the set point.

NOTE: FIRC-710 controls the cooling water to reactor 45-741.
FIRC-711 controls the cooling water to reactor 45-742.
FIRC-712 controls the cooling water to reactor 45-743.
FIRC-713 controls the cooling water to reactor 45-744.
FRC-201 controls the cooling water to reactor 45-781.

FIC-738 FIC-739 FIC-740	Recovery Vacuum Pump and Compressor Seal Water Flow Controllers	Brooks Model 3611 Rotameter with transmitter and a local Foxboro flow controller	50 gpm

NOTE: FIC-738 controls the seal water to vacuum pump 72-901 and compressor 72-903.
FIC-739 controls the seal water to vacuum pump 72-902 and compressor 72-904.
FIC-740 controls the seal water to compressor 72-905.

FCi-749 FCi-750 FCi-751 FCi-752	Reactor Agitator Mechanical Seal Oil Supply Flow Regulators	Kates Model MFA1-1 Flow Regulator	1.0 gpm

NOTE: FCi-749 controls the seal oil flow to reactor 45-741 double mechanical seal.
FCi-750 controls the seal oil flow to reactor 45-742 double mechanical seal.
FCi-751 controls the seal oil flow to reactor 45-743 double mechanical seal.
FCi-752 controls the seal oil flow to reactor 45-744 double mechanical seal.

V. INSTRUMENT INDEX (Cont.)

B. Flow Totalizers

Item No.	Service	Type	Set Point
FQIC-701A FQIC-701B	VCM Charge Totalizers	Foxboro Turbine Meter, Board-Mounted Read-out	Determined by specific batch recipe.
FQIC-702	Recovered VCM Charge Totalizer	Fischer/Porter Vortex Shedding Meter, Board Mounted Readout	Determined by specific batch recipe.
FQIC-704	Hot Water Charge Totalizer	Foxboro Turbine Meter, Board-Mounted Read-out.	Determined by specific batch recipe.
FQIC-705	Colloid Charge Totalizer	Brooks Oval Meter, Board-Mounted Read-out.	Determined by specific batch recipe.
FQIC-706	Colloid Makeup Water Flow Totalizer	Brooks Oval Meter, Local Colloid Board Readout	Hot Water, 538 Gallons Cold Water, 2,623 Gallons
FQI-798	Reactor Steam Stripping Flow Totalizer	Flow Nozzle with D/P Cell, Board-Mounted Readout.	None; totalizes only.
FQI-757	Hot Water Charge Totalizer	Orifice Plate with D/P Cell, Board-Mounted Readout.	None; totalizes only.
FQI-811	Steam to Reactor Module Flow Totalizer	Orifice Plate with D/P Cell, Board-Mounted Readout	None; Totalizes only.
FIC-708	Reactor Steam Stripping Flow Control	Flow Nozzle with D/P Cell, Board-Mounted Controller	23,000 lbs/hr.
FQI-203	Initiator Injection Pot Service Water Flow Totalizer--D-745 Reactor	Neptune Displacement Meter, Local Read-out only	Determined in Field

V. INSTRUMENT INDEX (CONTINUED)

C. Level Controllers

Item No.	Service	Type	Set Point
LC-720 LC-722	Seal Water Separator Level Controllers	Displacer, Fisher Model 2500T	16 Inches from Bottom of Displacer Float

NOTE: LC-720 controls the water level in seal water separator 45-762.
LC-722 controls the water level in seal water separator 45-763.

LIC-725	Slurry Dump Tank 45-766 Level Controller	Displacer, Fisher Model 2500T	To be determined in field.

D. Pressure Controllers

Item No.	Service	Type	Set Point
PCi-704	Recovered VCM Storage Tanks 89-520 and 45-317 Inert Vent Backpressure Regulator	Self-Contained Pressure Regulator	60 psig
PCi-706	Steam Stripping Header Steam Supply Backpressure Regulator	Self-Contained Pressure Regulator	100 psig
PIC-725	Recovery Knockout Drum 45-760 Inlet Pressure Controller	Diaphragm with Foxboro Controller	35 psig
PIC-726	VCM Bleed Stream to Recovery System Pressure Controller	Vacuum D/P Transmitter with a Local Foxboro Controller	3" Hg Vacuum
PCi-729	Hydroquinone Storage Tank 45-765 Nitrogen Pressure Regulator	Self-Contained Pressure Regulator	1 psig
PCi-731	Mechanical Seal Purge Water Surge Drum 45-759 Nitrogen Supply Pressure Regulator	Self-Contained Pressure Regulator	180 psig

V. INSTRUMENT INDEX (CONTINUED)

D. Pressure Controllers (Continued)

Item No.	Service	Type	Set Point
PCi-739	Seal Oil Pressure Unit 95-299 Nitrogen Supply Pressure Regulator	Self-Contained Pressure Regulator	200 psig
PCi-741	Seal Oil Pressure Unit 95-300 Nitrogen Supply Pressure Regulator	Self-Contained Pressure Regulator	200 psig
PCi-743 PCi-744 PCi-745 PCi-746 PCi-747 PCi-752	Breathing Air Station Supply Pressure Regulator	Self-Contained Pressure Regulator	20 psig

NOTE: PCi-743 regulates breathing air to the reactor area, ground level.
PCi-744 regulates breathing air to the reactor area, second level.
PCi-745 regulates breathing air to the recovery building, first floor.
PCi-746 regulates breathing air to the recovery building, second floor.
PCi-747 regulates breathing air to the charge area.
PCi-752 regulates breathing air to the reactor area, third level.

PCi-754 PCi-755 PCi-756 PCi-757	NO Short Stop Supply Pressure Regulator	Self-Contained Pressure Regulator	200 psig

NOTE: PCi-754 regulates NO supply pressure to reactor 45-741.
PCi-755 regulates NO supply pressure to reactor 45-742.
PCi-756 regulates NO supply pressure to reactor 45-743.
PCi-757 regulates NO supply pressure to reactor 45-744.

PIC-759	Blowdown Tank 45-319 Pressure Controller	Vacuum D/P Transmitter with Local Foxboro Controller	To be Determined in Field

V. INSTRUMENT INDEX (CONTINUED)

E. Temperature Controllers

Item No.	Service	Type	Set Point
TIC-701	Hot Water Tank 45-748 Temperature Controller	Resistance Bulb with Board-Mounted Foxboro Controller	140°F
TIC-702	Hot Water Preheater 55-332 Discharge Temperature Controller	Filled System with Local Foxboro Controller	145°F
TRC-703	Charge Water Temperature Controller	Resistance Bulb with Board-Mounted Foxboro Controller	Determined by Specific Batch Recipe
TIRC-706 TIRC-707 TIRC-708 TIRC-709 TIRC-201	Reactor Polymerization Temperature Controllers	Resistance Bulb with Foxboro Controller	Determined by Specific Batch Recipe

NOTE: TIRC-706 controls reactor 45-741 polymerization temperature.
TIRC-707 controls reactor 45-742 polymerization temperature.
TIRC-708 controls reactor 45-743 polymerization temperature.
TIRC-709 controls reactor 45-744 polymerization temperature.
TIRC-201 controls reactors 45-781 polymeriztion temperature.

TIRC-710 TIRC-711 TIRC-712 TIRC-713 TIRC-202	Reactor Steam Stripping Temperature Controller	Resistance Bulb with Board-Mounted Foxboro Controller	225°F

NOTE: TIRC-710 controls reactor 45-741 steam stripping temperature.
TIRC-711 controls reactor 45-742 steam stripping temperature.
TIRC-712 controls reactor 45-743 steam stripping temperature.
TIRC-713 controls reactor 45-744 steam stripping temperature.
TIRC-202 controls reactor 45-781 steam stripping temperature.

TIC-716 TIC-717	Seal Water Temperature Controller	Filled System with Local Foxboro Controller	To be Determined in Field

NOTE: TIC-716 controls seal water cooler 55-335 outlet temperature.
TIC-717 controls seal water cooler 55-336 outlet temperature.

V. INSTRUMENT INDEX (CONTINUED)

E. Temperature Controllers (Continued)

Item No.	Service	Type	Set Point
TIC-718	Cleaning Solution Heater 55-339 Outlet Temperature Controller	Filled System with Local Foxboro Controller	190°F
TIC-730	Water Stripper 45-319 Temperature Controller	Filled System with Local Foxboro Controller	175°F

ALARMS & SAFETY
EQUIPMENT

VI. ALARMS AND SAFETY EQUIPMENT

A. Continuous Flow Fresh Air System

In order to provide personnel protection, a continuous flow fresh air system has been installed. This system consists of personnel fresh air masks and a constant flow breathing air supply. The supply lines are piped to all affected areas of the plant. The individual hookup stations consist of quick connect/disconnect-type fittings.

The individual lines to the designated areas are designed to allow a minimum flow of 6 SCFM to each mask at approximately 10-15 psig. An air pressure regulator, shutoff valve, and an air filter are provided at the piping header to each individual area.

The air supply system utilizes two Nash compressors supplying 100 SCFM each at a maximum pressure of 80 psig. Each compressor will supply about fifteen masks with air at one time. The compressors normally are both in operation at the same time, except in cases of mechanical failure.

The system is equipped with both visable and audible low pressure alarms which are activated at 50 psig. The revolving beacon light is mounted on a pole to give wider visibility, and the horn is mounted at the compressor. An on-off switch is provided at each compressor.

VI. ALARMS AND SAFETY EQUIPMENT (Cont.)

A. Continuous Flow Fresh Air System (Cont.)

The following job operations will REQUIRE the wearing of a continuous flow fresh air mask supplied through the fresh air lines or a Scott Air Pak:

1. Opening any piece of process equipment in vinyl chloride service including:

   a. Pumps
   b. Compressors
   c. Filters
   d. Vessels
   e. Piping

2. Opening a Lenape manway on a reactor without using steam jet evacuation.

3. Entering vessels or may confined area that have contained vinyl chloride.

4. While on top of the large blend tanks which are regulated areas.

5. When using the portable vinyl chloride detector to pinpoint a vinyl chloride leak detected by the continuous monitoring system when the VCM conentration is expected to exceed 10 ppm.

6. Reactor dumping normally does not require the use of a fresh air respirator. Abnormal conditions which would require a fresh air mask are:

   a. When working on a plugged reactor dump valve or line.
   b. Dumping a coarse batch.
   c. Inoperative Sweco exhauster.

7. Sampling of reactors, VCM railcars, or storage tanks.

8. The heated water vapor coming from vents in the old unit sewer during pump-out of the blowdown tank contain concentrations of VCM above 1 ppm. If an employee must perform work in an area where these vapors exist, an air mask must be worn.

VI. ALARMS AND SAFETY EQUIPMENT (Cont.)

A. Continuous Flow Fresh Air System (Cont.)

9. Any other operation which has the possibility of resulting in exposure greater than the permissible exposure limit. The permissible exposure limit is defined as:

a. No employee may be exposed to vinyl chloride at concentrations greater than 1 ppm averaged over any 8-hour period, and

b. No emplyee may be exposed to vinyl chloride at concentrations greater than 5 ppm averaged over any period exceeding 15 minutes.

c. No empoyee may be exposed to vinyl chloride by direct contact with liquid vinyl chloride.

VI. ALARMS AND SAFETY EQUIPMENT (CONTINUED)

B. Alarms and Switches

1. Amperage Alarms

Item No.	Service	Type	Set Point
AAHL-701 AAHL-702 AAHL-703 AAHL-704 IAHL-200	Low or High Amperage to the Reactor Agitator Motor	Board-Mounted Alarm	To be determined in the field.

NOTE: AAHL-701 indicates abnormal amperage to reactor 45-741 agitator motor.
AAHL-702 indicates abnormal amperage to reactor 45-742 agitator motor.
AAHL-703 indicates abnormal amperage to reactor 45-743 agitator motor.
AAHL-704 indicates abnormal amperage to reactor 45-744 agitator motor.
IAHL-200 indicates abnormal amperage to reactor 45-781 agitator motor.

2. Flow Alarms and Switches

Item No.	Service	Type	Set Point
FSL-701A and B	Low VCM Flow during Charge	Switch that activates Alarm (FAL-701) on Board	400 gpm
FAL-701	Low VCM Flow during Charge	Board-Mounted Alarm	400 gpm
FAL-714 FAL-715 FAL-716 FAL-717	Low Seal Water Flow to the Reactor Agitators	Board-Mounted Alarm	2 gpm

NOTE: FAL-714 indicates low flow to reactor 45-741.
FAL-715 indicates low flow to reactor 45-742.
FAL-716 indicates low flow to reactor 45-743.
FAL-717 indicates low flow to reactor 45-744.

VI. ALARMS AND SAFETY EQUIPMENT (CONTINUED)

B. Alarms and Switches (Continued)

3. Level Alarms and Switches

Item No.	Service	Type	Set Point
LAH-701	High VCM Level in Fresh VCM Storage Tank 45-745	Board-Mounted Alarm	252 Inches above Bottom Tangent
LSH-701A	High VCM Level in Fresh VCM Storage Tank 45-745	Switch Activates LAH-701	252 Inches above Bottom Tangent
LSH-701B	High VCM Level in Fresh VCM Storage Tank 45-745	Switch that Serves as Charge Permissive	252 Inches above Bottom Tangent
LSH-701C	Level Control of Fresh VCM Receiver 45-745	Switch which Stops VCM Transfer	225 Inches Above Discharge Nozzle
LSL-701D	Level Control of Fresh VCM Receiver 45-745	Switch which Starts Transfer	219 Inches Above Discharge Nozzle
LAH-710	High Level in Colloid Makeup Tank 45-751	Alarm on Colloid Local Board	8 Inches from Top of Tank
LSH-711B	High Water Level in Hot Water Tank 45-748	Switch that Serves as Charge Permissive	129 Inches above Discharge Nozzle
LSH-711C	Hot Water Tank 45-758 Level Control	Switch which Stops Water Transfer on High Level	360 Inches above Bottom Tangent
LSL-711D	Hot Water Tank 45-748 Level Control	Switch which Starts Water Transfer	350 Inches above Discharge Nozzle
LAH-713	High Level in Colloid Storage Tank 45-752	Board-Mounted Alarm	6 Inches from Top of Tank

VI. ALARMS AND SAFETY EQUIPMENT (CONTINUED)

B. Alarms and Switches (Continued)

3. Level Alarms and Switches (Continued)

Item No.	Service	Type	Set Point
LAH-714	High Level in Colloid Charge Tank 45-753	Board-Mounted Alarm	8 Inches from Top of Tank
LSL-715	Low Level in Colloid Charge Tank 45-753	Switch Serves as Charge Permissive	24 Inches above Bottom Tangent
LSH-716	Level Control of Recovery Knockout Drum 45-760	Switch Opens Valve to Blowdown Tank on High Level	28 Inches above Bottom Tangent
LSL-717	Level Control of Recovery Knockout Drum 45-760	Switch Closes Valve to Blowdown Tank on Low Level	18 Inches above Bottom Tangent
LSH-718	Level Control of Recovery Knockout Drum 45-761	Switch Opens Valve to Blowdown Tank on High Level	28 Inches above Bottom Tangent
LSH-719	Level Control of Recovery Knockout Drum 45-761	Switch Closes Valve to Blow down Tank on Low Level	18 Inches Above Bottom Tangent
LAH-720	High Level in Seal Water Separator 45-762	Local Alarm	44 Inches above Bottom Tangent
LAL-720	Low Level in Seal Water Separator 45-762	Local Alarm	16 Inches above Bottom Tangent
LAH-722	High Level in Seal Water Separator 45-763	Local Alarm	44 Inches above Bottom Tangent
LAL-722	Low Level in Seal Water Separator 45-763	Local Alarm	16 Inches above Bottom Tangent

VI. ALARMS AND SAFETY EQUIPMENT (CONTINUED)

B. Alarms and Switches (Continued)

3. Level Alarms and Switches (Continued)

Item No.	Service	Type	Set Point
LAH-725	High Level in Slurry Dump Tank 45-766	Board-Mounted Alarm	6 Inches from Top of Tank
LAH-727	High Level in Cleaning Solution Tank 45-767	Board-Mounted Alarm	6 Inches from Top of Tank
LAL-729	Low Level in Cleaning Solution Tank 45-767	Board-Mounted Alarm	6 Inches from Bottom of Tank
LSL-730	Low Level in Seal Oil Reservoir 95-299	Switch Activates LAL-730, Starts Spare Seal Oil Unit 95-300, and Turns Off 95-299	To be Defined by Vendor
LAL-730	Low Level in Seal Oil Reservoir 95-299	Board-Mounted Alarm	To be Defined by
LSL-731	Low Level in Seal Oil Reservoir 95-300	Switch Activates LAL-731, Starts Spare Seal Oil Unit 95-299, and Turns Off 95-300	To be Defined by Vendor
LAL-731	Low Level in Seal Oil Reservoir 95-300	Board-Mounted Alarm	To be Defined by Vendor
LAL-733	Low Level in Hydroquinone Storage Tank 45-765	Board-Mounted Alarm	6 Inches above Bottom Tangent
LAH-734	High Level in Cleaning Solution Tank 45-767	Switch Shuts Down Cleaning Solution Pumps 72-898 and 72-899 and Caustic Transfer Pumps	6 Inches from Top of Tank
LAL-739	Low Level in Colloid Makeup Tank 45-751	Board-Mounted Alarm	One Inch above Bottom Tangent

VI. ALARMS AND SAFETY EQUIPMENT (CONTINUED)

B. Alarms and Switches (Continued)

3. Level Alarms and Switches (Continued)

Item No.	Service	Type	Set Point
LAH-740	High Level in Blow-down Tank 45-319	Board-Mounted Alarm	22 Inches from Top of Tank
LSL-741	Low Level in Blow-down Tank 45-319	Switch will Shut Off Blowdown Tank Pump 72-900 and Close Valves CV-880 and CV-891	12 Inches from Bottom of Tank

4. Pressure Alarms and Switches

Item No.	Service	Type	Set Point
PSH-703	High Pressure in Initiator Injection Pot 45-750	Switch turns on high pressure light on the board and is a precharge condition.	180 psig
PSL-707	Low Pressure in Steam Stripping Header	Switch closes control valve that supplies steam to the reactor during steam stripping.	100 psig
PSL-712 PSL-713 PSL-714 PSL-715 PSL-205	Low Pressure in Reactor during Recovery	Switch prevents opening of reactor dump valve unless pressure during recovery has been at least as low as set point.	8 psig

NOTE: PSL-712 senses pressure in reactor 45-741.
PSL-713 senses pressure in reactor 45-742.
PSL-714 senses pressure in reactor 45-743.
PSL-715 senses pressure in reactor 45-744.
PSL-205 senses pressure in reactor 45-781.

VI. ALARMS AND SAFETY EQUIPMENT (Cont.)

B. Alarms and Switches (Cont.)

4. Pressure Alarms and Switches (Cont.)

Item No.	Service	Type	Set Point
PSL-716 PSL-717 PSL-718 PSL-719	Low Pressure in Reactors during Evacuation	Switch keeps charge from starting by preventing main reactor charge valve from opening unless pressure is at low set point/ or above.	25" Hg Vacuum

NOTE: PSL-716 senses pressure in reactor 45-741.
PSL-717 senses pressure in reactor 45-742.
PSL-718 senses pressure in reactor 45-743.
PSL-719 senses pressure in reactor 45-744.

PAH-720 PAH-721 PAH-722 PAH-723 PAH-206	High Pressure in Reactors	Board-Mounted Alarm	160 psig

NOTE: PAH-720 indicates high pressure in reactor 45-741.
PAH-721 indicates high pressure in reactor 45-742.
PAH-722 indicates high pressure in reactor 45-743.
PAH-723 indicates high pressure in reactor 45-744.
PAH-206 indicates high pressure in reactor 45-781

PSL-727	Low Recovery Compressor Suction Pressure	Switch will start recovery vacuum pumps 72-901 and 72-902 and activate proper valving sequence during recovery	7 psig
PDS-728	High Differential Pressure Between Recovery Vacuum Pump Suction and Recovery Compressor Discharge	Switch shuts off recovery compressors 72-903, 72-904, and 72-905 and vacuum pumps 72-901 and 72-902.	80 psig
PSL-732	Low Pressure on High Pressure Service Water System	Switch prevents automatic matic charge sequence from beginning and activates PAL-732	150 psig
PAL-212	Low Pressure on AMS kill Pot	Switch alerts operator to low nitrogen pressure on Emergency AMS kill pot.	275 psig

VI. ALARMS AND SAFETY EQUIPMENT (CONTINUED)

B. Alarms and Switches (Continued)

4. Pressure Alarms and Switches (Continued)

Item No.	Service	Type	Set Point
PAL-732	Low Pressure on High Pressure Service Water System	Board-Mounted Alarm	150 psig
PSL-737	Low Pressure on Mechanical Seal Purge Water System (MSPW)	Switch activates PAL-737 and turns on spare (MSPW) pump 72-887 or 72-888.	180 psig
PAL-737	Low Pressure on Mechanical Seal Purge Water System	Board-Mounted Alarm	180 psig
PSL-738	Low Pressure from Seal Oil Unit 95-299	Switch activates spare seal oil unit 95-300, turns off 95-299, activates the necessary valves, and activates PAL-738.	205 psig
PAL-738	Low Pressure from Seal Oil Unit 95-299	Board-Mounted Alarm	205 psig
PSL-740	Low Pressure from Seal Oil Unit 95-300	Switch activates spare seal oil unit 95-299, turns off 95-300, activates the necessary valves, and activates PAL-740.	205 psig
PAL-740	Low Pressure from Seal Oil Unit 95-300	Board-Mounted Alarm	205 psig
PAH-750	High Pressure on Initiator Injection Pot 45-750	Board-Mounted Alarm	225 psig

VI. ALARMS AND SAFETY EQUIPMENT (CONTINUED)

B. Alarms and Switches (Continued)

4. Pressure Alarms and Switches (Continued)

Item No.	Service	Type	Set Point
PAH-751	High Seal Oil System Pressure	Board-Mounted Alarm	255 psig
PAL-753	Low Pressure on NO Short Stop Bottles	Board-Mounted Alarm	350 psig
PSL-758	Low Pressure on High Pressure Service Water System (HPSW)	Switch turns on spare HPSW pump 72-885 or 72-886.	180 psig
PAH-760	High Pressure in Blowdown Tank 45-319	Board-Mounted Alarm	10 psig
PSL-762	Low Steam Pressure to Blowdown Tank 45-319	Switch closes TCV-730 and PCV-759 and resets on rising steam pressure of 50 psig.	40 psig
PAL-763	Low Instrument Air Pressure	Board-Mounted Alarm	85 psig
TAH-706 TAH-707 TAH-708 TAH-709 TAH-201	High Temperature in the Reactors	Board-Mounted Alarm	160°F

NOTE: TAH-706 indicates high temperature in reactor 45-741.
TAH-707 indicates high temperature in reactor 45-742.
TAH-708 indicates high temperature in reactor 45-743.
TAH-709 indicates high temperature in reactor 45-744.
TAH-201 indicates high temperature in reactor 45-781.

TAH-715	High Discharge Temperature on the Recovery Compressors	Board-Mounted Alarm	150°F
TAH-719	High Seal Oil Temperature	Board-Mounted Alarm	125°F
TAH-720	High Temperature in Initiator Injection Pot 45-750	Board-Mounted Alarm	75°F

VI. ALARMS AND SAFETY EQUIPMENT (CONTINUED)

C. Firewater System

The firewater system consists of a deluge system, combustible hydrocarbon analyzer, and fire monitors with hose connections.

1. Fire Monitors

The fire monitors are normally supplied from the city water system. A tie-in with the firewater system allows the fire monitors to operate off either water system. There are six fire monitors located around the perimeter of the recovery building and reactor area.

2. Hydrocarbon Analyzer

A continuous combustible hydrocarbon analyzer is used to detect major VCM leaks. When the VCM level at any sample point reaches the set point, the deluge system is activated automatically.

3. Deluge System

The deluge system is normally supplied from the firewater system. It can be operated on process water. The deluge system is a sprinkler system which will cover the reactors, dump system, fresh and recovered VCM storage tanks, and both floors of the recovery building with a water spray. The deluge system is designed to lower VCM concentrations in the reactor and recovery building area in the event of a VCM leak and as a sprinkler system to help put out fires. The deluge system can be activated manually, by the combustible hydrocarbon analyzer, or by thermal sensors.

VI. ALARMS AND SAFETY EQUIPMENT (CONTINUED)

C. Firewater System (Continued)

3. Deluge System (Continued)

The revised firewater system contains three new post indicator valves (PIV) and one PIV was relocated. These are valves which have indicators on them to show whether the valve is open or closed. These valves are used to direct water to either the D-700 reactor area or the V-11 area.

The valves are located at:

1. The southwest corner of the new cooling water tower.
2. East wall of the V-11 building.
3. Two are located at the northwest corner of the intersection of the entrance road and second street.

D. Fixed Point VCM Monitor

A fixed point VCM monitor is used to detect VCM and record the VCM concentration at various locations in the reactor and recovery building. The readout is on a chart in the control room.

EQUIPMENT OPENING PROCEDURES

VII. EQUIPMENT ENTRY PROCEDURE

EPA standards for VCM emissions and OSHA regulations on personnel exposure to VCM require that certain operating procedures be followed when there is the possibility of VCM emission to the atmosphere or personnel exposure to VCM. For this reason and to ensure safe working conditions at all times, the "Engineering and Work Practice Control Program for the Reduction of Employee Exposure to Vinyl Chloride" manual should be consulted whenever equipment in the reactor area is opened for any reason. This manual contains a list of detailed procedures as well as safety precautions for equipment opening. Every vessel has an entry check list that must be filled out by the Shift Supervior. The entry check list contains a building list for opening a vessel.

APPENDIX

APPENDIX A

EQUIPMENT LIST - CONTINUED

Tanks and Vessels (Continued)	Service
45-759	Mechanical Seal Purge Water Surge Drum
45-760	South Recovery Knockout Drum
45-761	North Recovery Knockout Drum
45-762	South Seal Water Separator
45-763	North Seal Water Separator
45-764	Recovered VCM Collect Tank
45-765	Hydroquinone Storage Tank
45-766	Slurry Dump Tank
45-767	Cleaning Solution Tank
45-768	Reactor Evacuation Ejector Cyclone Separator
45-770	Reactor Sampling Bomb
45-778	Initiator Charge Pot for Reactor 45-781
45-786	AMS Emergency Kill Pot for Reactor 45-781

Filters	
64-716	Process Water Charge Filter
64-718	North VCM Charge Filter
64-719	Recovered VCM Filter
64-720	Process Water Filter
64-721	Colloid Makeup Water Filter
64-722	North Colloid Transfer Filter
64-723	South Colloid Transfer Filter
64-724	Service Water Filter
64-725	Seal Oil Supply Filter for Seal Oil Pressure Unit 95-299
64-726	Seal Oil Supply Filter for Seal Oil Pressure Unit 95-300
64-727	Seal Oil Return Filter for Seal Oil Pressure Unit 95-299
64-728	Seal Oil Return Filter for Seal Oil Pressure Unit 95-300
64-731	South Seal Water Filter
64-732	North Seal Water Filter
64-733	Slurry Strainer
64-734	Cleaning Solution Strainer
64-735	Breathing Air Filter (Reactors, First Level)
64-736	Breathing Air Filter (Reactors, Second Level)
64-737	Breathing Air Filter (Recovery Building First Floor)
64-738	Breathing Air Filter (Recovery Building, Second Floor)
64-739	Breathing Air Filter (Charge Area)
64-740	Breathing Air Filter (Reactors, Third Level)
64-741	Blowdown Tank Drain Strainer
64-742	South VCM Charge Filter

APPENDIX A

EQUIPMENT LIST

Reactors

45-741	Polymerization Reactor
45-742	Polymerization Reactor
45-743	Polymerization Reactor
45-744	Polymerization Reactor
45-781	Polymerization Reactor

Heat Exchangers

55-328	Reactor 45-741 Condenser
55-329	Reactor 45-742 Condenser
55-330	Reactor 45-743 Condenser
55-331	Reactor 45-744 Condenser
55-358	Reactor 45-781 Condenser
55-332	Hot Water Preheater
55-333	Hot Water Tank Heater
55-334	Water Recirculation Cooler
55-335	West Seal Water Cooler
55-336	East Seal Water Cooler
55-337	West Recovered VCM Condenser
55-338	East Recovered VCM Condenser
55-339	Cleaning Solution Heater

Eductors and Ejectors

EE-701	Reactor 45-741 Jacket Eductor
EE-702	Reactor 45-742 Jacket Eductor
EE-703	Reactor 45-743 Jacket Eductor
EE-704	Reactor 45-744 Jacket Eductor
EE-705	Reactor Evacuation Ejector
EE-201 A, B, & C	Reactor 45-781 Jacket Eductor
EE-200	Reactor Evacuation Ejector

Tanks and Vessels

45-301	Instrument air Capacity Tank
45-317	East Recovered VCM Storage Tank
89-520	West Recovered VCM Storage Tank
45-319	Blowdown Tank
45-745	Fresh VCM Storage Tank
45-748	Hot Water Tank
45-750	Initiator Injection Pot
45-751	Colloid Makeup Tank
45-752	Colloid Storage Tank
45-753	Colloid Charge Tank
45-754	Seal Oil Storage Drum
45-755	AMS Short Stop Charge Pot for Reactor 45-741
45-756	AMS Short Stop Charge Pot for Reactor 45-742
45-757	AMS Short Stop Charge Pot for Reactor 45-743
45-758	AMS Short Stop Charge Pot for Reactor 45-744

VAB.0001146784

APPENDIX A

EQUIPMENT LIST - CONTINUED

Pumps	Motor	Service
72-875	70-875	VCM Charge Pump
72-876	70-876	VCM Charge Pump
72-877	70-877	Recovered VCM Charge Pump
72-878	70-878	Recovered VCM Charge Pump
72-879	70-879	Hot Water Charge Pump
72-880	70-880	Hot Water Charge Pump
72-881	70-881	Colloid Batch Transfer Pump
72-882	70-882	Colloid Circulation Pump
72-883	70-883	Colloid Charge Pump
72-884	70-884	Colloid Charge Pump
72-885	70-885	High Pressure Service Water Pump
72-886	70-886	High Pressure Service Water Pump
72-887	70-887	Mechanical Seal Purge Water Pump
72-888	70-888	Mechanical Seal Purge Water Pump
72-889	70-889	Water Recirculation Pump
72-890	70-890	Water Recirculation Pump
72-891	70-891	Seal Water Pump
72-892	70-892	Seal Water Pump
72-893	70-893	Recovered VCM Transfer Pump
72-884	70-894	Recovered VCM Transfer Pump
72-895	70-895	Hydroquinone Injection Pump
72-896	70-896	Slurry Transfer Pump
72-897	70-897	Slurry Transfer Pump
72-898	70-898	Cleaning Solution Pump
72-899	70-899	Cleaning Solution Pump
72-900	70-900	Blowdown Tank Pump

Compressors and Fans	Motor	
72-901	70-901	Recovery Vacuum Pump
72-902	70-902	Recovery Vacuum Pump
72-903	70-903	Recovery Compressor
72-904	70-904	Recovery Compressor
72-905	70-905	Recovery Compressor
49-368	70-864	Slurry Strainer Exhauster

Agitators	Motor	
51-101	70-814	Reactor 45-741 Agitator
51-102	70-815	Reactor 45-742 Agitator
51-103	70-816	Reactor 45-743 Agitator
51-104	70-817	Reactor 45-744 Agitator
51-105	70-818	Colloid Makeup Tank Agitator
51-106	70-819	Hydroquinone Storage Tank Agitator
51-110	70-971	Reactor 45-781 Agitator

APPENDIX A

EQUIPMENT LIST - CONTINUED

Package Units	Service
95-299	Seal Oil Pressure Unit
95-300	Seal Oil Pressure Unit
PA-703	Deluge System
PA-704	Deluge System Combustible Hydrocarbon Analyzer
PA-705	Fire Monitor
PA-706	Fire Monitor
PA-707	Fire Monitor
PA-708	Fire Monitor
PA-709	Fire Monitor
PA-710	Fire Monitor
PA-711	Deleted
PA-712	Fixed Point VCM Monitor
PA-713	Emergency NO Short Stop Bottles
PA-714	Emergency NO Short Stop Bottles
PA-715	Emergency NO Short Stop Bottles
PA-716	Emergency NO Short Stop Bottles
PA-717	Programmable Logic Controller
PA-200	Emergency NO Short Stop Bottles
PA-201	Nitrogen Supply bottle to AMS Emergency Kill Pot.

APPENDIX B

INSTRUMENT LIST

Item No.	Service
Amperage Instruments	
AI-701	Reactor Agitator 51-101 Motor Amperage Indicator
AAHL-701	Reactor Agitator 51-101 Motor High or Low Amperage Alarm
AI-702	Reactor Agitator 51-102 Motor Amperage Indicator
AAHL-702	Reactor Agitator 51-102 Motor High or Low Amperage Alarm
AI-703	Reactor Agitator 51-103 Motor Amperage Indicator
AAHL-703	Reactor Agitator 51-103 Motor High or Low Amperage Alarm
AI-704	Reactor Agitator 51-104 Motor Amperage Indicator
AAHL-704	Reactor Agitator 51-104 Motor High or Low Amperage Alarm
AI-705	Recovery Vacuum Pump 72-901 Motor Amperage
AI-706	Recovery Vacuum Pump 72-902 Motor Amperage
AI-707	Recovery Compressor 72-903 Motor Amperage
AI-708	Recovery Compressor 72-904 Motor Amperage
AI-709	Recovery Compressor 72-905 Motor Amperage
Control Valves	
CV-701	Fresh VCM Storage Tank 45-745 Outlet Valve
CV-702	Deleted
CV-703	Recovered VCM Valve to VCM Charge Pumps 72-875 and 72-876
CV-704	VCM Charge Pump 72-875 Discharge Valve
CV-705	VCM Charge Pump 72-876 Discharge Valve
CV-706	Hot Water Tank 45-748 Outlet Valve
CV-707	Colloid Charge Pump 72-885 Discharge Valve
CV-708	Deleted
CV-709	Hot Water Valve to Colloid Makeup Tank 45-751
CV-710	Reactor 45-741 Main Charge Valve
CV-711	Reactor 45-741 Colloid Charge Valve
CV-712	Reactor 45-741 Steam Stripping Valve
CV-713	Reactor Condenser 55-328 Cleaning and Rinse Valve
CV-714	Reactor 45-741 Vent Valve
CV-715	Reactor 45-741 Inert Vent Valve
CV-716	Reactor 45-741 Recovery and Evacuation Valve
CV-717	Reactor 45-741 Cleaning and Rinse Valve
CV-718	Deleted
CV-719	Deleted
CV-720	Reactor 45-742 Main Charge Valve
CV-721	Reactor 45-742 Colloid Charge Valve
CV-722	Reactor 45-742 Steam Stripping Valve
CV-723	Reactor Condenser 55-329 Cleaning and Rinse Valve
CV-724	Reactor 45-742 Vent Valve
CV-725	Reactor 45-742 Inert Vent Valve
CV-726	Reactor 45-742 Recovery and Evacuation Valve
CV-727	Reactor 45-742 Cleaning and Rinse Valve
CV-728	Deleted

APPENDIX B

INSTRUMENT LIST - CONTINUED

Item No.	Service
Control Valves (Continued)	
CV-729	Deleted
CV-730	Reactor 45-743 Main Charge Valve
CV-731	Reactor 45-743 Colloid Charge Valve
CV-732	Reactor 45-743 Steam Stripping Valve
CV-733	Reactor Condenser 55-330 Cleaning and Rinse Valve
CV-734	Reactor 45-743 Vent Valve
CV-735	Reactor 45-743 Inert Vent Valve
CV-736	Reactor 45-743 Recovery and Evacuation Valve
CV-737	Reactor 45-743 Cleaning and Rinse Valve
CV-738	Deleted
CV-739	Deleted
CV-740	Reactor 45-744 Main Charge Valve
CV-741	Reactor 45-744 Colloid Charge Valve
CV-742	Reactor 45-744 Steam Stripping Valve
CV-743	Reactor Condenser 55-331 Cleaning and Rinse Valve
CV-744	Reactor 45-744 Vent Valve
CV-745	Reactor 45-744 Inert Vent Valve
CV-746	Reactor 45-744 Recovery and Evacuation Valve
CV-747	Reactor 45-744 Cleaning and Rinse Valve
CV-748	Deleted
CV-749	Deleted
CV-750	Reactor 45-741 Hot Water Rinse Supply Valve
CV-751	Reactor Condenser 45-741 Chem Wash Solution Supply Valve
CV-752	Reactor 45-741 Recovery Valve
CV-753	Reactor 45-741 Initiator Charge Valve
CV-754	Reactor 45-741 VCM Charge Valve
CV-755	Reactor 45-741 Water Charge Valve
CV-756	Deleted
CV-757	Reactor 45-741 Initiator Charge Line Sewer Valve
CV-758	Reactor 45-741 Slurry Dump Valve
CV-759	Reactor 45-741 Sewer Drain Valve
CV-760	Reactor 45-741 Chem Wash Solution Return Valve
CV-761	Deleted
CV-762	Reactor 45-741 Evacuation Valve
CV-763	Reactor 45-741 Initiator Charge Valve
CV-764	Reactor 45-742 Hot Water Rinse Supply Valve
CV-765	Reactor 45-742 Evacuation Valve
CV-766	Reactor 45-742 Chem Wash Solution Supply Valve
CV-767	Reactor 45-742 Recovery Valve
CV-768	Reactor 45-742 Initiator Charge Valve
CV-769	Reactor 45-742 VCM Charge Valve
CV-770	Reactor 45-742 Water Charge Valve
CV-771	Deleted
CV-772	Reactor 45-742 Slurry Dump Valve

APPENDIX B

INSTRUMENT LIST - CONTINUED

Item No.	Service
Control Valves (Continued)	
CV-773	Reactor 45-742 Chem Wash Solution Return Valve
CV-774	Reactor 45-742 Sewer Drain Valve
CV-775	Deleted
CV-776	Reactor 45-742 Initiator Charge Valve
CV-777	Reactor 45-742 Initiator Charge Line Sewer Valve
CV-778	Reactor 45-743 Hot Water Rinse Supply Valve
CV-779	Reactor 45-743 Evacuation Valve
CV-780	Reactor 45-743 Chem Wash Solution Supply Valve
CV-781	Reactor 45-743 Recovery Valve
CV-782	Reactor 45-743 Initiator Charge Valve
CV-783	Reactor 45-743 VCM Charge Valve
CV-784	Reactor 45-743 Water Charge Valve
CV-785	Deleted
CV-786	Reactor 45-743 Slurry Dump Valve
CV-787	Reactor 45-743 Chem Wash Solution Return Valve
CV-788	Reactor 45-743 Sewer Drain Valve
CV-789	Deleted
CV-790	Reactor 45-743 Initiator Charge Valve
CV-791	Reactor 45-743 Initiator Charge Line Sewer Valve
CV-792	Reactor 45-744 Hot Water Rinse Supply Valve
CV-793	Reactor 45-744 Evacuation Valve
CV-794	Reactor 45-744 Chem Wash Solution Supply Valve
CV-795	Reactor 45-744 Initiator Charge Valve
CV-796	Reactor 45-744 VCM Charge Valve
CV-797	Reactor 45-744 Water Charge Valve
CV-798	Deleted
CV-799	Reactor 45-744 Slurry Dump Valve
CV-800	Reactor 45-744 Chem Wash Solution Return Valve
CV-801	Reactor 45-744 Sewer Drain Vlave
CV-802	Deleted
CV-803	Reactor 45-744 Initiator Charge Valve
CV-804	Reactor 45-744 Initiator Charge Line Sewer Valve
CV-805	Reactor 45-744 Recovery Valve
CV-806	Colloid Charge Pump 72-884 Discharge Valve
CV-807	Deleted
CV-808	Cold Water Addition Valve for Swirl
CV-809	Cold Water Addition Valve for Charge
CV-810	Recovery Vacuum Pump 72-901 Suction Valve
CV-811	Recovery Vacuum Pump 72-901 Discharge Valve
CV-812	Recovery Vacuum Pump 72-901 Seal Water Supply Valve
CV-813	Recovery Vacuum Pump 72-901 Mechanical Seal Water Supply Valve
CV-814	Reactor Jacket Eductor EE-701 Steam Valve

APPENDIX B

INSTRUMENT LIST - CONTINUED

Item No.	Service
Control Valves (Continued)	
CV-815	Reactor Jacket Eductor EE-702 Steam Valve
CV-816	Reactor Jacket Eductor EE-703 Steam Valve
CV-817	Reactor Jacket Eductor EE-704 Steam Valve
CV-818	Fresh VCM Storage Tank 45-745 Inlet Valve
CV-819	Hot Water Preheater 55-332 Water Inlet Valve
CV-820	Recovery Vacuum Pump 72-902 Suction Valve
CV-821	Recovery Vacuum Pump 72-902 Discharge Valve
CV-822	Recovery Vacuum Pump 72-902 Seal Water Supply Valve
CV-823	Recovery Vacuum Pump 72-902 Mechanical Seal Water Supply Valve
CV-824	Deleted
CV-825	Deleted
CV-826	Deleted
CV-827	Deleted
CV-828	Colloid Makeup Tank 45-751 Process Water Valve
CV-829	Hot Water Charge Pump 72-880 Discharge Valve
CV-830	Recovery Compressor 72-903 Suction Valve
CV-831	Recovery Compressor 72-903 Discharge Valve
CV-832	Recovery Compressor 72-903 Seal Water Supply Valve
CV-833	Recovery Compressor 72-903 Mechanical Seal Water Supply Valve
CV-834	Deleted
CV-835	Water Recirculation Cooler 55-334 Cooling Water Return Valve
CV-836	Recovery Knockout Drum 45-760 Water Recirculation Inlet Valve
CV-837	Recovery Knockout Drum 45-760 Water Blowdown Valve
CV-838	Recovery Knockout Drum 45-761 Water Recirculation Inlet Valve
CV-839	Recovery Knockout Drum 45-761 Water Blowdown Valve
CV-840	Recovery Compressor 72-904 Suction Valve
CV-841	Recovery Compressor 72-904 Discharge Valve
CV-842	Recovery Compressor 72-904 Seal Water Supply Valve
CV-843	Recovery Compressor 72-904 Mechanical Seal Water Supply Valve
CV-844	Recovered VCM Condensers 55-337 and 55-338 Cooling Water Return Valve
CV-845	Deleted
CV-846	Deleted
CV-847	Reactor Evacuation Ejector EE-706 First Stage Steam Valve
CV-848	Reactor Evacuation Ejector EE-706 Second Stage Steam Valve
CV-849	Hot Water Charge Pump 72-879 Discharge Valve
CV-850	Recovery Compressor 72-905 Suction Valve
CV-851	Recovery Compressor 72-905 Discharge Valve

APPENDIX B

INSTRUMENT LIST - CONTINUED

Item No.	Service
Control Valves (Continued)	
CV-852	Recovery Compressor 72-905 Seal Water Supply Valve
CV-853	Recovery Compressor 72-905 Mechanical Seal Water Supply Valve
CV-854	Recovery Vacuum Pumps 72-901 and 72-902 Bypass Valve
CV-855	Recovery Compressors 72-903, 72-904, and 72-905 Bypass Valve
CV-856	Colloid Makeup Tank 45-751 Water Inlet Valve
CV-857	Colloid Makeup Tank 45-751 Colloid Outlet Valve
CV-858	Colloid Recirculation Valve to Colloid Storage Tank 45-752
CV-859	Colloid Circulation Pump 72-882 Inlet Valve
CV-860	Deleted
CV-861	Colloid Charge Tank 45-753 Inlet Valve
CV-862	Deleted
CV-863	Dump System Water Rinse Valve
CV-864	Slurry Transfer Pump 72-896 Mechanical Seal Water Valve
CV-865	Deleted
CV-866	Slurry Transfer Pump 72-897 Mechanical Seal Water Valve
CV-867	Deleted
CV-868	Deleted
CV-869	Deleted
CV-870	Deleted
CV-871	Cleaning Solution Heater 55-339 Inlet Valve
CV-872	Cleaning Solution Storage Tank 45-767 Top Inlet Valve
CV-873	Cleaning Solution Pumps 72-898 and 72-899 Suction Valve
CV-874	Reactor Cleaning Solution Return Valve to Cleaning Solution Tank 45-767
CV-875	Seal Oil Pressure Unit 95-300 Seal Oil Return Valve
CV-876	Seal Oil Pressure Unit 95-299 Seal Oil Return Valve
CV-877	Seal Oil Pressure Unit 95-300 Seal Oil Supply Valve
CV-878	Seal Oil Pressure Unit 95-299 Seal Oil Supply Valve
CV-879	Initiator Injection Pot 45-750 Service Water Inlet Valve
CV-880	Blowdown Tank Pump 72-900 Discharge Valve
CV-881	45-741 Emergency NO Short Stop Three-Way Valve
CV-882	45-742 Emergency NO Short Stop Three-Way Valve
CV-883	45-743 Emergency NO Short Stop Three-Way Valve
CV-884	45-744 Emergency NO Short Stop Three-Way Valve
CV-885	45-741 Emergency NO Short Stop Valve
CV-886	45-742 Emergency NO Short Stop Valve
CV-887	45-743 Emergency NO Short Stop Valve
CV-888	45-744 Emergency NO Short Stop Valve
CV-889	Recovery Seal Water and VCM Diverter Valve
CV-890	Recovery Seal Water and VCM Diverter Valve

APPENDIX B

INSTRUMENT LIST - CONTINUED

Item No.	Service
Level Instruments (Continued)	
LIC-726	Deleted
LA-726	Deleted
LAH-727	Cleaning Solution Tank 45-767 High Level Alarm
LI-728	Cleaning Solution Tank 45-767 Level Indicator
LAL-729	Cleaning Solution Tank 45-767 Low Level Alarm
LSL-730	Seal Oil Pressure Unit 95-299 Reservoir Low Level Switch
LAL-730	Seal Oil Pressure Unit 95-299 Reservoir Low Level Alarm
LSL-731	Seal Oil Pressure Unit 95-300 Reservoir Low Level Switch
LAL-731	Seal Oil Pressure Unit 95-300 Reservoir Low Level Alarm
LC-732	Deleted
LAL-733	Hydroquinone Storage Tank 45-765 Low Level Alarm
LSH-734	Cleaning Solution Tank 45-767 High Level Switch
LA-735	Deleted
LA-736	Deleted
LA-737	Deleted
LA-738	Deleted
LAL-739	Colloid Makeup Tank 45-751 Low Level Alarm
LAH-740	Blowdown Tank 45-319 High Level Alarm
LSL-741	Blowdown Tank 45-319 Low Level Switch
Pressure Gauges	
PG-701	VCM Charge Pump 72-875 Discharge Pressure Gauge
PG-702	VCM Charge Pump 72-876 Discharge Pressure Gauge
PG-703	Recovered VCM Charge Pump 72-877 Discharge Pressure Gauge
PG-704	Recovered VCM Charge Pump 72-878 Discharge Pressure Gauge
PG-705	Fresh VCM Storage Tank 45-745 Pressure Gauge
PG-706	Recovered VCM Storage Tank 89-520 Pressure Gauge
PG-707	Recovered VCM Storage Tank 45-317 Pressure Gauge
PG-708	Deleted
PG-709	Deleted
PG-710	Deleted
PG-711	Deleted
PG-712	Process Water Filter 64-720 Inlet Pressure Gauge
PG-713	Process Water Filter 64-720 Outlet Pressure Gauge
PG-714	Hot Water Charge Pump 72-879 Discharge Pressure Gauge
PA-715	Hot Water Charge Pump 72-880 Discharge Pressure Gauge
PG-716	Deleted
PG-717	Deleted
PG-718	Deleted

APPENDIX B

INSTRUMENT LIST - CONTINUED

Item No.	Service
Pressure Gauges (Continued)	
PG-719	Colloid Makeup Water Filter 64-721 Inlet Pressure Gauge
PG-720	Colloid Makeup Water Filter 64-721 Outlet Pressure Gauge
PG-721	Colloid Batch Transfer Pump 72-881 Discharge Pressure Gauge
PG-722	Colloid Transfer Filter 64-722 Outlet Pressure Gauge
PG-723	Colloid Circulation Pump 72-882 Discharge Pressure Gauge
PG-724	Colloid Transfer Filter 64-723 Outlet Pressure Gauge
PG-725	Colloid Charge Pump 72-883 Discharge Pressure Gauge
PG-726	Colloid Charge Pump 72-884 Discharge Pressure Gauge
PG-727	Steam Stripping Header Pressure Gauge
PG-728	Reactor 45-741 Steam Stripping Line Pressure Gauge
PG-729	Deleted
PG-730	Reactor Condenser 55-328 Pressure Gauge
PG-731	Reactor Agitator 51-101 Seal Oil Return Pressure Gauge
PG-732	Reactor 45-742 Steam Stripping Line Pressure Gauge
PG-733	Reactor Condenser 55-329 Pressure Gauge
PG-734	Deleted
PG-735	Reactor Agitator 51-102 Seal Oil Return Pressure Gauge
PG-736	Reactor 45-743 Steam Stripping Line Pressure Gauge
PG-737	Reactor Condenser 55-330 Pressure Gauge
PG-738	Deleted
PG-739	Reactor Agitator 51-103 Seal Oil Return Pressure Gauge
PG-740	Reactor 45-744 Steam Stripping Line Pressure Gauge
PG-741	Reactor Condenser 55-331 Pressure Gauge
PG-742	Deleted
PG-743	Reactor Agitator 51-104 Seal Oil Return Pressure Gauge
PG-744	Recovery Knockout Drum 45-760 Pressure Gauge
PG-745	Water Recirculation Pump 72-889 Discharge Pressure Gauge
PG-746	Deleted
PG-747	Recovered VCM Bleed Back Line Pressure Gauge
PG-748	Recovery Knockout Drum 45-761 Pressure Gauge
PG-749	Water Recirculation Pump 72-890 Discharge Pressure Gauge
PG-750	Deleted
PG-751	Recovery Vacuum Pump 72-901 Inlet Pressure Gauge
PG-752	Recovery Compressors 72-904 or 72-905 Suction Pressure Gauge
PG-753	Recovery Compressors 72-903, 72-904, and 72-905 Discharge Pressure Gauge
PG-754	Seal Water Separator 45-762 Pressure Gauge
PG-755	Seal Water Separator 45-763 Pressure Gauge
PG-756	Seal Water Pump 72-891 Discharge Pressure Gauge
PG-757	Seal Water Filter 64-731 Outlet Pressure Gauge
PG-758	Seal Water Pump 72-892 Discharge Pressure Gauge
PG-759	Seal Water Filter 64-732 Outlet Pressure Gauge

APPENDIX B

INSTRUMENT LIST - CONTINUED

Item No.	Service
Pressure Gauges (Continued)	
PG-760	Recovered VCM Collect Tank 45-764 Pressure Gauge
PG-761	Recovered VCM Transfer Pumps 72-893 and 72-894 Discharge Pressure Gauge
PG-762	Recovery Knockout Drum 45-760 VCM Inlet Line Pressure Gauge
PG-763	Hydroquinone Storage Tank 45-765 Pressure Gauge
PG-764	Hydroquinone Injection Pump 72-895 Discharge Pressure Gauge
PG-765	Slurry Transfer Pump 72-896 Discharge Pressure Gauge
PG-766	Deleted
PG-767	Slurry Transfer Pump 72-897 Discharge Pressure Gauge
PG-768	Deleted
PG-769	Caustic Solution Pump 72-898 Discharge Pressure Gauge
PG-770	Caustic Solution Pump 72-899 Discharge Pressure Gauge
PG-771	Cleaning Solution Heater 55-339 Outlet Pressure Gauge
PG-772	Service Water Filter 64-724 Inlet Pressure Gauge
PG-773	Service Water Filter 64-724 Outlet Pressure Gauge
PG-774	Service Water Pumps 72-885 and 72-886 Discharge Pressure Gauge
PG-775	Mechanical Seal Purge Water Pumps 72-887 and 72-888 Discharge Pressure Gauge
PG-776	AMS Short Stop Charge Pot 45-755 Outlet Pressure Gauge
PG-777	AMS Short Stop Charge Pot 45-756 Outlet Pressure Gauge
PG-778	AMS Short Stop Charge Pot 45-757 Outlet Pressure Gauge
PG-779	AMS Short Stop Charge Pot 45-758 Outlet Pressure Gauge
PG-780	Deleted
PG-781	Blowdown Tank Pump 72-900 Discharge Pressure Gauge
PG-782	Blowdown Tank 45-319 Pressure Gauge
PG-783	Seal Oil Return Header Pressure Gauge
PG-784	Seal Oil Pressure Unit 95-299 Pressure Gauge
PG-785	Seal Oil Pressure Unit 95-300 Pressure Gauge
PG-786	Seal Oil Supply Header Pressure Gauge
PG-787	Deleted
PG-788	Deleted
PG-789	Deleted
PG-790	Deleted
PG-791	Reactor Ejector Cyclone Separator 45-768 Outlet Pressure Gauge
PG-792	Breathing Air Header Pressure Gauge
PG-793	Recovery Vacuum Pump 72-902 Suction Pressure Gauge
PG-794	Deleted
PG-795	Initiator Injection Pot 45-750 Pressure Gauge
PG-796	Seal Oil Return Filter 64-727 Outlet Pressure Gauge
PG-797	Seal Oil Return Filter 64-728 Outlet Pressure Gauge

APPENDIX B

INSTRUMENT LIST - CONTINUED

Item No.	Service
Pressure Gauges (Continued)	
PG-798	Emergency NO Short Stop Bottle PA-713 Pressure Gauge
PG-799	Emergency NO Short Stop Bottle PA-714 Pressure Gauge
PG-800	Emergency NO Short Stop Bottle PA-715 Pressure Gauge
PG-801	Emergency NO Short Stop Bottle PA-716 Pressure Gauge
PG-802	VCM Charge Filter 64-718 and 64-742 Discharge Pressure Gauge
PG-803	Recovered VCM Charge Filter 64-719 Discharge Pressure Gauge
PG-804	Reactor 45-741 Resin Sampling System Pressure Gauge
PG-805	Reactor 45-742 Resin Sampling System Pressure Gauge
PG-806	Reactor 45-743 Resin Sampling System Pressure Gauge
PG-807	Reactor 45-744 Resin Sampling System Pressure Gauge
PG-808	Instrument Air Capacity Tank 45-301 Pressure Gauge
PG-809	Mechanical Seal Purge Water Surge Drum 45-759 Pressure Gauge
PG-810	High Pressure Service Water Header Pressure Gauge (Downstream of PCi-817)
PG-811	Mechanical Seal Purge Water Header Pressure Gauge (Downstream of PCi-818)
Pressure Instruments	
PA-701	Deleted
PCi-702	Deleted
PSH-703	Initiator Injection Pot 45-750 High Pressure Switch
PCi-704	Recovered VCM Storage Tanks 89-520 and 45-317 Inert Vent Back Pressure Regulator
PI-705	Reactor Evacuation Header Pressure Indicator
PCi-706	Steam Stripping Header Steam Supply Back Pressure Regulator
PSL-707	Steam Stripping Header Low Pressure Switch
PCi-708	Deleted
PCi-709	Deleted
PCi-710	Deleted
PCi-711	Deleted
PSL-712	Reactor 45-741 Pressure Switch (Prevents dump before recovery)
PSL-713	Reactor 45-742 Pressure Switch (Prevents dump before recovery)
PSL-714	Reactor 45-743 Pressure Switch (Prevents dump before recovery)
PSL-715	Reactor 45-744 Pressure Switch (Prevents dump before recovery)
PSL-716	Reactor 45-741 Pressure Switch (Prevents charge before evacuation)
PSL-717	Reactor 45-742 Pressure Switch (Prevents charge before evacuation)

APPENDIX B

INSTRUMENT LIST - CONTINUED

Item No.	Service
Pressure Instruments (Continued)	
PSL-718	Reactor 45-743 Pressure Switch (Prevents charge before evacuation)
PSL-719	Reactor 45-744 Pressure Switch (Prevents charge before evacuation)
PR-720	Reactor 45-741 Pressure Recorder
PAH-720	Reactor 45-741 High Pressure Alarm
PR-721	Reactor 45-742 Pressure Recorder
PAH-721	Reactor 45-742 High Pressure Alarm
PR-722	Reactor 45-743 Pressure Recorder
PAH-722	Reactor 45-743 High Pressure Alarm
PR-723	Reactor 45-744 Pressure Recorder
PAH-723	Reactor 45-744 High Pressure Alarm
PI-724	Reactor Recovery Pressure Indicator
PIC-725	Recovery Knockout Drum 45-760 Inlet Pressure Controller
PIC-726	VCM Bleed Stream to Recovery System Pressure Controller
PSL-727	Recovery Compressors 72-903, 72-904, and 72-905 Suction Low Pressure Switch
PDS-728	Recovery Vacuum Pumps 72-901 and 72-902 Suction and Recovery Compressors 72-903, 72-904, and 72-905 Discharge Differential Pressure Switch
PCi-729	Hydroquinone Storage Tank 45-765 Nitrogen Pressure Regulator
PCi-730	Deleted
PCi-731	Mechanical Seal Purge Water Surge Drum 45-759 Nitrogen Supply Pressure Regulator
PSL-732	High Pressure Service Water System Low Pressure Switch
PAL-732	High Pressure Service Water System Low Pressure Alarm
PCi-733	Deleted
PCi-734	Deleted
PCi-735	Deleted
PSL-737A and B	Mechanical Seal Water System Low Pressure Switches
PAL-737	Mechanical Seal Water System Low Pressure Alarm
PSL-738	Seal Oil Pressure Unit 95-299 Discharge Low Pressure Switch
PAL-738	Seal Oil Pressure Unit 95-299 Discharge Low Pressure Alarm
PCi-739	Seal Oil Pressure Unit 95-299 Nitrogen Supply Pressure Regulator
PSL-740	Seal Oil Pressure Unit 95-300 Discharge Low Pressure Switch
PAL-740	Seal Oil Pressure Unit 95-300 Discharge Low Pressure Alarm
PCi-741	Seal Oil Pressure Unit 95-300 Nitrogen Supply Pressure Regulator
PA-742	Deleted

APPENDIX B

INSTRUMENT LIST - CONTINUED

Item No.	Service
Pressure Instruments (Continued)	
PCi-743	Breathing Air Station Supply Pressure Regulator (Reactors, Ground Level)
PCi-744	Breathing Air Station Supply Pressure Regulator (Reactors, Second Level)
PCi-745	Breathing Air Station Supply Pressure Regulator (Recovery Building, First Floor)
PCi-746	Breathing Air Station Supply Pressure Regulator (Recovery Building, Second Floor)
PCi-747	Breathing Air Station Supply Pressure Regulator (Charge Area)
PCi-748	Deleted
PCi-749	Deleted
PAH-750	Initiator Injection Pot 45-750 High Pressure Alarm
PAH-751	Seal Oil Supply High Pressure Alarm
PCi-752	Breathing Air Station Supply (Reactors, Third Level)
PAL-753	Emergency NO Short Stop Bottles Low Pressure Alarm
PCi-754	PA-713 NO Supply Pressure Regulator to Reactor 45-741
PCi-755	PA-714 NO Supply Pressure Regulator to Reactor 45-742
PCi-756	PA-715 NO Supply Pressure Regulator to Reactor 45-743
PCi-757	PA-716 NO Supply Pressure Regulator to Reactor 45-744
PSL-758	High Pressure Service Water Low Pressure Switch
PIC-759	Blowdown Tank 45-319 Pressure Controller
PAH-760	Blowdown Tank 45-319 High Pressure Alarm
PI-760	Blowdown Tank 45-319 Pressure Indicator
PS-761	Deleted
PSL-762	Blowdown Tank 45-319 Stripping Steam Low Pressure Switch
PAL-763	Reactor Area Instrument Air Low Pressure Alarm
Rupture Discs	
RD-701	Reactor 45-741 Rupture Disc
RD-702	Reactor 45-742 Rupture Disc
RD-703	Reactor 45-743 Rupture Disc
RD-704	Reactor 45-744 Rupture Disc
RD-705	Reactor Condenser 55-328 Rupture Disc
RD-706	Reactor Condenser 55-329 Rupture Disc
RD-707	Reactor Condenser 55-330 Rupture Disc
RD-708	Reactor Condenser 55-331 Rupture Disc
RD-709	Reactor 45-741 First of Double Rupture Discs
RD-710	Reactor 45-742 First of Double Rupture Discs
RD-711	Reactor 45-743 First of Double Rupture Discs
RD-712	Reactor 45-744 First of Double Rupture Discs
RD-713	Reactor 45-741 Second of Double Rupture Discs
RD-714	Reactor 45-742 Second of Double Rupture Discs

APPENDIX B

INSTRUMENT LIST - CONTINUED

Item No.	Service
Rupture Discs (Continued)	
RD-715	Reactor 45-743 Second of Double Rupture Discs
RD-716	Reactor 45-744 Second of Double Rupture Discs
RD-717	Fresh VCM Storage Tank 45-745 Rupture Disc
RD-718	Recovered VCM Storage Tank 89-520 Rupture Disc
RD-719	Recovered VCM Storage Tank 45-317 Rupture Disc
RD-720	Deleted
RD-721	Deleted
RD-722	Deleted
RD-723	Deleted
RD-724	Deleted
RD-725	Deleted
RD-726	Recovery Knockout Drum 45-760 Rupture Disc
RD-727	Recovery Knockout Drum 45-761 Rupture Disc
RD-728	Initiator Injection Pot 45-750 Rupture Disc
RD-729	Deleted
RD-730	Deleted
RD-731	Recovery Vacuum Pump 72-901 Inlet Rupture Disc
RD-732	Recovery Vacuum Pump 72-902 Inlet Rupture Disc
RD-733	Deleted
RD-734	Deleted
RD-735	Seal Water Separator 45-762 Rupture Disc
RD-736	Seal Water Separator 45-763 Rupture Disc
RD-737	Deleted
RD-738	Deleted
RD-739	Recovered VCM Condenser 55-337 VCM Outlet Rupture Disc
RD-740	Recovered VCM Condenser 55-338 VCM Outlet Rupture Disc
RD-741	Recovered VCM Collect Tank 45-764 Rupture Disc
RD-742	Deleted
RD-743	Deleted
RD-744	Blowdown Tank 45-319 Rupture Disc
RD-745 to RD-759	Deleted
RD-760	Recovered VCM Collect Tank 45-764 Inlet Line Rupture Disc
RD-761	Deleted
RD-762	Deleted
RD-763	Deleted
RD-764	Deleted
RD-765	Slurry Dump Line Rupture Disc
RD-766	Cleaning Solution Strainer 64-734 Inlet Piping Rupture Disc
RD-767	Deleted
Safety-Relief Valves	
SV-701	Reactor 45-741 Relief Valve
SV-702	Reactor 45-742 Relief Valve
SV-703	Reactor 45-743 Relief Valve

APPENDIX B

INSTRUMENT LIST - CONTINUED

Item No.	Service
Safety-Relief Valves (Continued)	
SV-704	Reactor 45-744 Relief Valve
SV-705	Reactor Condenser 55-328 Relief Valve
SV-706	Reactor Condenser 55-329 Relief Valve
SV-707	Reactor Condenser 55-330 Relief Valve
SV-708	Reactor Condenser 55-331 Relief Valve
SV-709	Reactor 45-741 Jacket Relief Valve
SV-710	Reactor 45-742 Jacket Relief Valve
SV-711	Reactor 45-743 Jacket Relief Valve
SV-712	Reactor 45-744 Jacket Relief Valve
SV-713	Hot Water Preheater 55-332 Relief Valve
SV-714	Deleted
SV-715	Deleted
SV-716	Deleted
SV-717	Fresh VCM Storage Tank 45-745 Relief Valve
SV-718	Recovered VCM Storage Tank 89-520 Relief Valve
SV-719	Recovered VCM Storage Tank 45-317 Relief Valve
SV-720	VCM Charge Pumps 72-875 and 72-876 Suction Piping Relief Valve
SV-721	Recovered VCM Charge Pumps 72-877 and 72-878 Suction Piping Relief Valve
SV-722	Recovered VCM Charge Filter 64-719 Relief Valve
SV-723	Recovered VCM Charge Pumps 72-877 and 72-878 Discharge Piping Relief Valve
SV-724	VCM Charge Filter 64-718 Relief Valve
SV-725	VCM Charge Line Relief Valve (Down Stream of VCM Charge Totalizers FQIC-701A and B)
SV-726	Recovery Knockout Drum 45-760 Relief Valve
SV-727	Recovery Knockout Drum 45-761 Relief Valve
SV-728	Deleted
SV-729	Water Recirculation Cooler 55-334 Relief Valve
SV-730	Deleted
SV-731	Recovery Vacuum Pump 72-901 Inlet Relief Valve
SV-732	Recovery Vacuum Pump 72-902 Inlet Relief Valve
SV-733	Hydroquinone Storage Tank 45-765 Relief Valve
SV-734	Hydroquinone Injection Pump 72-895 Discharge Relief Valve
SV-735	Seal Water Separator 45-762 Relief Valve
SV-736	Seal Water Separator 45-763 Relief Valve
SV-737	Seal Water Filter 64-731 Relief Valve
SV-738	Seal Water Filter 64-732 Relief Valve
SV-739	Recovered VCM Condenser 55-337 VCM Outlet Relief Valve
SV-740	Recovered VCM Condenser 55-338 VCM Outlet Relief Valve
SV-741	Recovered VCM Collect Tank 45-764 Relief Valve
SV-742	Cleaning Solution Heater (Tubes) 55-339 Relief Valve
SV-743	Mechanical Seal Purge Water Surge Drum 45-759 Relief Valve

APPENDIX B

INSTRUMENT LIST - CONTINUED

Item No.	Service
Safety-Relief Valves (Continued)	
SV-744	Blowdown Tank 45-319 Relief Valve
SV-745	Breathing Air Station Supply Piping Relief Valve (Reactors, Ground Level)
SV-746	Breathing Air Station Supply Piping Relief Valve (Reactors, Ground Level)
SV-747	Breathing Air Station Supply Piping Relief Valve (Recovery Building First Floor)
SV-748	Breathing Air Station Supply Piping Relief Valve (Recovery Building Second Floor)
SV-749	Breathing Air Station Supply Piping Relief Valve (Charge Area)
SV-750	AMS Short Stop Charge Pot 45-755 Relief Valve
SV-751	AMS Short Stop Charge Pot 45-756 Relief Valve
SV-752	AMS Short Stop Charge Pot 45-757 Relief Valve
SV-753	AMS Short Stop Charge Pot 45-758 Relief Valve
SV-754	Reactor 45-741 Steam Stripping Line Relief Valve
SV-755	Reactor 45-742 Steam Stripping Line Relief Valve
SV-756	Reactor 45-743 Steam Stripping Line Relief Valve
SV-757	Reactor 45-744 Steam Stripping Line Relief Valve
SV-758	Deleted
SV-759	Deleted
SV-760	Recovered VCM Collect Tank 45-764 Inlet Line Relief Valve
SV-761	Recovered VCM Transfer Pumps 72-893 and 72-894 Discharge Relief Valve
SV-762	Recovered VCM Storage Tanks 89-520 and 45-317 Inlet Line Relief Valve
SV-763	VCM Charge Pumps 72-875 and 72-876 Discharge Relief Valve
SV-764	Breathing Air Station Supply Piping Relief Valve (Reactors, Third Level)
SV-765	Cleaning Solution Filter 64-734 Relief Valve
SV-766	Deleted
SV-767	VCM Charge Filter 64-742 Relief Valve
SV-768	Instrument Air Capacity Tank 45-301 Relief Valve
Temperature Gauges	
TG-701	Hot Water Preheater 55-332 Outlet Temperature Gauge
TG-702	Recovered VCM Storage Tank 89-520 Temperature Gauge
TG-703	Recovered VCM Storage Tank 45-317 Temperature Gauge
TG-704	Colloid Makeup Tank 45-751 Temperature Gauge
TG-705	Colloid Storage Tank 45-752 Temperature Gauge
TG-706	Colloid Charge Tank 45-753 Temperature Gauge
TG-707	Reactor Jacket 45-741 Cooling Water Return Temperature Gauge
TG-708	Reactor Condenser 55-328 Cooling Water Return Temperature Gauge

APPENDIX B

INSTURMENT LIST - CONTINUED

Item No.	Service
Temperature Gauges (Continued)	
TG-709	Reactor Jacket 45-742 Cooling Water Return Temperature Gauge
TG-710	Reactor Condenser 55-329 Cooling Water Return Temperature Gauge
TG-711	Reactor Jacket 45-743 Cooling Water Return Temperature Gauge
TG-712	Reactor Condenser 55-330 Cooling Water Return Temperature Gauge
TG-713	Reactor Jacket 45-744 Cooling Water Return Temperature Gauge
TG-714	Reactor Condenser 55-331 Cooling Water Return Temperature Gauge
TG-715	Water Recirculation Cooler 55-334 Outlet Temperature Gauge
TG-716	Deleted
TG-717	Water Recirculation Cooler 55-334 Cooling Water Return Temperature Gauge
TG-718	Water Recirculation Cooler 55-334 Inlet Temperature Gauge
TG-719	Seal Water Cooler 55-335 Cooling Water Return Temperature Gauge
TG-720	Seal Water Separator 45-762 Seal Water Outlet Temperature Gauge
TG-721	Deleted
TG-722	Seal Water Cooler 55-336 Cooling Water Return Temperature Gauge
TG-723	Seal Water Separator 45-763 Seal Water Outlet Temperature Gauge
TG-724	Recovered VCM Condenser 55-337 Cooling Water Return Temperature Gauge
TG-725	Recovered VCM Condenser 55-337 VCM Outlet Temperature Gauge
TG-726	Deleted
TG-727	Recovered VCM Condenser 55-338 Cooling Water Return Temperature Gauge
TG-728	Recovered VCM Condenser 55-338 VCM Outlet Temperature Gauge
TG-729	Deleted
TG-730	Cleaning Solution Tank 45-767 Temperature Gauge
TG-731	Seal Oil Return Temperature Gauge
TG-732	Seal Oil Pressure Unit 95-299 Cooling Water Return Temperature Gauge
TG-733	Seal Oil Pressure Unit 95-300 Cooling Water Return Temperature Gauge

APPENDIX B

INSTRUMENT LIST - CONTINUED

Item No.	Service
Temperature Gauges (Continued)	
TG-734	Seal Oil Supply Temperature Gauge
TG-735	Colloid Makeup Tank Jacket 45-751 Cooling Water Return Temperature Gauge
TG-736	Fresh VCM Storage Tank 45-745 Temperature Gauge
TG-737	Process Water Temperature Gauge
TG-738	Hot Water Tank 45-748 Temperature Gauge
TG-739	Initiator Charge Pot 45-750 Temperature Gauge
TG-740	Blowdown Tank 45-319 Temperature Gauge
Temperature Instruments	
TIC-701	Hot Water Tank 45-748 Temperature Controller
TIC-702	Hot Water Preheater 55-332 Discharge Temperature Controller
TRC-703	Charge Water Temperature Controller
TR-704	Colloid Makeup Tank 45-751 Temperature Recorder
TSH-704	Colloid Makeup Tank 45-751 High Temperature Switch
TSL-704	Colloid Makeup Tank 45-751 Low Temperature Switch
TI-705	VCM Charge Temperature Indicator
TIRC-706	Reactor 45-741 Polymerization Temperature Controller
TAH-706	Reactor 45-741 High Temperature Alarm
TIRC-707	Reactor 45-742 Polymerization Temperature Controller
TAH-707	Reactor 45-742 High Temperature Alarm
TIRC-708	Reactor 45-743 Polymerization Temperature Controller
TAH-708	Reactor 45-743 High Temperature Alarm
TIRC-709	Reactor 45-744 Polymerization Temperature Controller
TAH-709	Reactor 45-744 High Temperature Alarm
TIRC-710	Reactor 45-741 Steam Stripping Temperature Controller
TIRC-711	Reactor 45-742 Steam Stripping Temperature Controller
TIRC-712	Reactor 45-743 Steam Stripping Temperature Controller
TIRC-713	Reactor 45-744 Steam Stripping Temperature Controller
TR-714	Reactor Multipoint Temperature Recorder (For all Four Reactors)
TAH-715	Recovery Compressors 72-903, 72-904, and 72-905 Discharge High Temperature Alarm
TIC-716	Seal Water Cooler 55-335 Outlet Temperature Controller
TIC-717	Seal Water Cooler 55-336 Outlet Temperature Controller
TIC-718	Cleaning Solution Heater 55-339 Outlet Temperature Controller
TAH-719	Seal Oil Pressure Units 95-299 or 95-300 Discharge High Temperature Alarm
TAH-720	Initiator Injection Pot 45-750 High Temperature Alarm
TW-721	Cleaning Solution Heater 55-339 Steam Inlet Thermowell
TW-722	Cleaning Solution Heater 55-339 Solution Inlet Thermowell

APPENDIX B

INSTRUMENT LIST - CONTINUED

Item No.	Service
Temperature Instruments (Continued)	
TW-723	Deleted
TW-724	Cleaning Solution Heater 55-339 Solution Outlet Thermowell
TW-725	VCM Charge Filters 64-718 and 64-742 Outlet Piping Thermowell
TR-726	Recovery System Multipoint Temperature Recorder
TW-727	Water Recirculation Cooler 55-334 Cooling Water Supply Thermowell
TW-728	Seal Water Cooler 55-335 Cooling Water Supply Thermowell
TW-729	Recovered VCM Condenser 55-337 Cooling Water Supply Thermowell
TIC-730	Blowdown Tank 45-319 Temperature Controller
TW-731	Reactor 45-741 Cooling Water Return Thermowell
TW-732	Reactor 45-742 Cooling Water Return Thermowell
TW-733	Reactor 45-743 Cooling Water Return Thermowell
TW-734	Reactor 45-744 Cooling Water Return Thermowell
Amperage Instruments	
II-200	Reactor Agitator 51-110 Motor Amperage Indicator
IR-200	Reactor Agitator 51-110 Motor Amperage Recorder
IAH-200	Reactor Agitator 51-110 Motor Amperage High Alarm
IAL-200	Reactor Agitator 51-110 Motor Amerpage Low Alarm

A

APPENDIX B

INSTRUMENT LIST - CONTINUED

Item No.	Service
Control Valves	
CV-200	Reactor 45-781 Main Dump Valve
CV-201	Reactor 45-781 VCM Charge Valve
CV-202	Reactor 45-781 Slurry Dump Valve
CV-203	Reactor 45-781 Chem Wash Return Valve
CV-204	Reactor 45-781 Hot Water Charge Valve
CV-205	Reactor 45-781 Sewer drain Valve
CV-206	Reactor 45-781 Steam Stripping Valve
CV-207	Reactor 45-781 Steam Stripping Valve
CV-208	Reactor 45-781 Colloid Charge Valve
CV-209	Reactor 45-781 Initiator Charge Valve
CV-210	Reactor 45-781 Resin Sampling Valve
CV-211	Reactor Jacket Educator EE-201 Steam Valve
CV-213	Reactor 45-781 Chem Wash Supply Valve
CV-214	Reactor 45-781 Rinse Supply Valve
CV-215	Reactor Condenser 55-358 Cleaning and Rinse Valve
CV-216	Reactor 45-781 Cleaning and Rinse Valve
CV-217	Reactor 45-781 Evacuation Valve
CV-218	Reactor 45-781 Recovery Valve
CV-219	Reactor 45-781 Recovery and Evacuation Valve
CV-220	Reactor Condenser 55-358 Inert Vent Valve
CV-221	Reactor 45-781 Vent Valve
CV-222	Evacuation Ejector First Stage Steam Valve
CV-223	Evacuation Ejector Second Stage Steam Valve
CV-224	Evacuation Header Valve to EE-200
CV-225	Reactor 45-781 VCM Charge Valve
CV-226	Evacuation Header Valve to EE-705
CV-227	Reactor 45-781 AMS Emergency Kill Valve
CV-228	Reactor 45-781 AMS Emergency Kill Valve
CV-891	Steam Valve for Blowdown Tank 45-319 Pressure Regulation
CV-892	Water Drain Valve from Recovered VCM Storage Tank 89-520 to the Blowdown Tank 45-319
CV-893	Water Drain Valve from Recovered VCM Storage Tank 45-317 to the Blowdown Tank 45-319
CV-894	VCM Recovery Valve for Blowdown Tank 45-319
CV-895	VCM Recovery Valve for VCM Storage Tank 45-745, 89-520, and 45-317
CV-896	Instrument Air Supply Valve to Reactors 45-741, 45-742, 45-743, 45-744, and 45-781
CV-897	Hot Water Rinse Header Valve to Reactors 45-741, 45-742, 45-743, 45-744, and 45-781
Flow Instruments	
FQIC- 701A and B	VCM Charge Totalizers
FSL-701A and B	VCM Charge Low Flow Switches

APPENDIX B

INSTRUMENT LIST - CONTINUED

Item No.	Service
Flow Instruments (Cont.)	
FAL-701	VCM Charge Low Flow Alarm
FQIC-702	Recovered VCM Charge Totalizer
FQIC-704	Hot Water Charge Totalizer
FQIC-705	Colloid Charge Totalizer
FQIC-706	Colloid Makeup Tank 45-751 Makeup Water Flow Totalizer
FI-707	Deleted
FR-708	Reactor Steam Stripping Flow Recorder
FQI-708	Reactors Steam Stripping Flow Totalizer
FIC-708	Reactor Steam Stripping Flow Controller
FIRC-710	Reactor 45-741 Cooling Water Flow Controller
FIRC-711	Reactor 45-742 Cooling Water Flow Controller
FIRC-712	Reactor 45-743 Cooling Water Flow Controller
FIRC-713	Reactor 45-744 Cooling Water Flow Controller
FI-714	Reactor Agitator 51-101 Inboard Seal Water Flush Rotameter
FAL-714	Reactor Agitator 51-101 Seal Water Low Flow Alarm
FI-715	Reactor Agitator 51-102 Inboard Seal Water Flush Rotameter
FAL-715	Reactor Agitator 51-101 Seal Water Low Flow Alarm
FI-716	Reactor Agitator 51-103 Inboard Seal Water Flush Rotameter
FAL-716	Reactor Agitator 51-103 Seal Water Low Flow Alarm
FI-717	Reactor Agitator 51-104 Inboard Seal Water Flush Rotameter
FAL-717	Reactor Agitator 51-104 Seal Water Low Flow Alarm
FI-718	Reactor 45-741 Spray Nozzle Flush Rotameter
FQI-203	Reactor 45-781 Initiator Injection Pot 45-778 Flow Totalizer
FIRC-201	Reactor 45-781 Cooling Water Flow Controller
FI-200	Reactor Agitator 51-110 Lip Seal Flush Rotameter
FI-202	Reactor 45-781 Spray Nozzle Flush Rotameter
FI-205	Reactor Agitator 51-110 Mechanical Seal Oil Supply Rotameter
OF-206	Reactor Condenser 55-358 Cooling Water Supply Orifice
RO-207	Reactor 45-781 Inert Vent Restriction Orifice

APPENDIX B

INSTRUMENT LIST - CONTINUED

Item No.	Service
Flow Instruments (Continued)	
FI-719	Reactor 45-742 Spray Nozzle Flush Rotameter
FI-720	Reactor 45-743 Spray Nozzle Flush Rotameter
FI-721	Reactor 45-744 Spray Nozzle Flush Rotameter
FI-722	Deleted
FI-723	Deleted
FI-724	Deleted
FI-725	Deleted
FI-726	Recovery Knockout Drum Level Controller LC-716 Water Flush Rotameter
FI-727	Recovery Knockout Drum Level Controller LC-718 Water Flush Rotameter
FI-728	Recovery Vacuum Pump 72-901 Double Mechanical Seal Water Rotameter
FI-729	Recovery Vacuum Pump 72-901 Inboard Flush Water Rotameter
FI-730	Recovery Vacuum Pump 72-902 Double Mechanical Seal Water Rotameter
FI-731	Recovery Vacuum Pump 72-902 Inboard Flush Water Rotameter
FI-732	Rocovery Compressor 72-903 Double Mechanical Seal Water Rotameter
FI-733	Deleted
FI-734	Recovery Compressor 72-904 Double Mechanical Seal Water Rotameter
FI-735	Deleted
FI-736	Recovery Compressor 72-905 Double Mechanical Seal Water Rotameter
FI-737	Deleted
FIC-738	Recovery Vacuum Pump 72-901 and Recovery Compressor 72-903 Seal Water Flow Controller
FIC-739	Recovery Vacuum Pump 72-902 and Recovery Compressor 72-904 Seal Water Flow Controller
FIC-740	Recovery Compressor 72-905 Seal Water Flow Controller
FI-741	Seal Water Separator Level Controller LC-720 Flush Water Rotameter
FI-742	Seal Water Separator Level Controller LC-722 Flush Water Rotameter
FIC-743	Deleted
FI-744	Recovered VCM to Recovery Knockout Drum 45-760 Bullseye
FI-745	Deleted
FI-746	Deleted
FI-747	Slurry Dump to Slurry Strainer FD-717 Bullseye
FI-748	Deleted
FCi-749	Reactor Agitator 51-101 Mechanical Seal Oil Supply Flow Regulator

APPENDIX B

INSTRUMENT LIST - CONTINUED

Item No.	Service
Flow Instruments (Continued)	
FCi-750	Reactor Agitator 51-102 Mechanical Seal Oil Supply Flow Regulator
FCi-751	Reactor Agitator 51-103 Mechanical Seal Oil Supply Flow Regulator
FCi-752	Reactor Agitator 51-104 Mechanical Seal Oil Supply Flow Regulator
FI-753	Reactor Agitator 51-101 Mechanical Seal Oil Supply Rotameter
FI-754	Reactor Agitator 51-102 Mechanical Seal Oil Supply Rotameter
FI-755	Reactor Agitator 51-103 Mechanical Seal Oil Supply Rotameter
FI-756	Reactor Agitator 51-104 Mechanical Seal Oil Supply Rotameter
FQI-757	Hot Water Charge Totalizer
RO-758	Colloid Makeup Water Supply Restriction Orifice
OF-759	Reactor 45-741 Cooling Water System Orifice Flanges
OF-760	Reactor 45-742 Cooling Water System Orifice Flanges
OF-761	Reactor 45-743 Cooling Water System Orifice Flanges
OF-762	Reactor 45-744 Cooling Water System Orifice Flanges
FI-763	Slurry Transfer Pump 72-896 Inboard Seal Flush Water Rotameter
FI-764	Slurry Transfer Pump 72-897 Inboard Seal Flush Water Rotameter
FI-765	Deleted
FI-766	Deleted
FI-767	VCM Charge Pump 72-875 Double Mechanical Seal Water Rotameter
FI-768	VCM Charge Pump 72-876 Double Mechanical Seal Water Rotameter
FI-769	Recovered VCM Charge Pump 72-877 Double Mechanical Seal Rotameter
FI-770	Recovered VCM Charge Pump 72-878 Double Mechanical Seal Rotameter
RO-771	VCM Charge Pump 72-875 Double Mechanical Seal Water Back Pressure Restriction Orifice
RO-772	VCM Charge Pump 72-876 Double Mechanical Seal Water Back Pressure Restriction Orifice
RO-773	Recovered VCM Charge Pump 72-877 Mechanical Seal Water Back Pressure Restriction Orifice
RO-774	Recovered VCM Charge Pump 72-878 Mechanical Seal Water Back Pressure Restriction Orifice

APPENDIX B

INSTRUMENT LIST - CONTINUED

Item No.	Service
Flow Instruments (Continued)	
FI-775	Water Recirculation Pump 72-889 Inboard Seal Flush Water Rotameter
FI-776	Deleted
FI-777	Water Recirculation Pump 72-890 Inboard Seal Flush Water Rotameter
FI-778	Seal Water Pump 72-891 Inboard Seal Flush Water Rotameter
FI-779	Seal Water Pump 72-892 Inboard Seal Flush Water Rotameter
RO-780	Recovery Vacuum Pump 72-901 Double Mechanical Seal Water Back Pressure Restriction Orifice
RO-781	Recovery Vacuum Pump 72-902 Double Mechanical Seal Water Back Pressure Restriction Orifice
RO-782	Recovery Compressor 72-903 Double Mechanical Seal Water Back Pressure Restriction Orifice
RO-783	Recovery Compressor 72-904 Double Mechanical Seal Water Back Pressure Restriction Orifice
RO-784	Recovery Compressor 72-905 Double Mechanical Seal Water Back Pressure Restriction Orifice
RO-785	Recovered VCM Transfer Pump 72-893 Mechanical Seal Water Back Pressure Restriction Orifice
RO-786	Recovered VCM Transfer Pump 72-894 Mechanical Seal Water Back Pressure Restriction Orifice
FI-787	Recovered VCM Transfer Pump 72-893 Mechanical Seal Water Rotameter
FI-788	Recovered VCM Transfer Pump 72-894 Mechanical Seal Water Rotameter
FI-789	Recovery Vacuum Pump 72-901 Inboard Flush Water Rotameter
FI-790	Recovery Vacuum Pump 72-901 Double Mechanical Seal Water Rotameter
FI-791	Recovery Vacuum Pump 72-902 Inboard Flush Water Rotameter
FI-792	Recovery Vacuum Pump 72-902 Double Mechanical Seal Water Rotameter
FI-793	Deleted
FI-794	Recovery Compressor 72-903 Double Mechanical Seal Water Rotameter
FI-795	Deleted
FI-796	Recovery Compressor 72-904 Double Mechanical Seal Water Rotameter
FI-797	Deleted
FI-798	Recovery Compressor 72-905 Double Mechanical Seal Water Rotameter

APPENDIX B

INSTRUMENT LIST - CONTINUED

Item No.	Service
Flow Instruments (Continued)	
RO-799	Recovery Vacuum Pump 72-901 Double Mechanical Seal Water Back Pressure Restriction Orifice
RO-800	Recovery Vacuum Pump 72-902 Double Mechanical Seal Water Back Pressure Restriction Orifice
RO-801	Recovery Compressor 72-903 Double Mechanical Seal Water Back Pressure Restriction Orifice
RO-802	Recovery Compressor 72-904 Double Mechanical Seal Water Back Pressure Restriction Orifice
RO-803	Recovery Compressor 72-905 Double Mechanical Seal Water Back Pressure Restriction Orifice
FI-804	AMS Short Stop Charge Pot 45-755 Water Flush Rotameter
FI-805	AMS Short Stop Charge Pot 45-756 Water Flush Rotameter
FI-806	AMS Short Stop Charge Pot 45-757 Water Flush Rotameter
FI-807	AMS Short Stop Charge Pot 45-758 Water Flush Rotameter
FI-808	Blowdown Tank 45-319 Level Cage Water Flush Rotameter
FI-809	Recovered VCM Sampling System Bullseye
FI-810	Recovered VCM Sampling System Bullseye
FQI-811	Steam to Reactor Module Flow Totalizer
RO-812	Deleted
RO-813	Deleted
FI-814	Blowdown Tank Pump 72-900 Double Mechanical Seal Water Rotameter
FI-815	Blowdown Tank Pump 72-900 Inboard Seal Water Flush Rotameter
RO-816	Blowdown Tank Pump 72-900 Double Mechanical Seal Water Back Pressure Restriction Orifice
Level Gauges	
LG-701A, B, C, and D	Fresh VCM Storage Tank 45-745 Level Gauge
LG-702A, B, C and D	Recovered VCM Storage Tank 89-520 Level Gauge
LG-703A, B, C and D	Recovered VCM Storage Tank 45-317 Level Gauge
LG-704A, B, C and D	Hot Water Tank 45-748 Level Gauge
LG-705	Deleted
LG-706A, B, and C	Colloid Storage Tank 45-752 Level Gauge
LG-707A, B and C	Colloid Charge Tank 45-753 Level Gauge
LG-708	Recovery Knockout Drum 45-760 Level Gauge
LG-709	Recovery Knockout Drum 45-761 Level Gauge
LG-710	Hydroquinone Storage Tank 45-765 Level Gauge

APPENDIX B

INSTRUMENT LIST - CONTINUED

Item No.	Service
Level Gauges (Continued)	
LG-711	Seal Water Separator 45-762 Level Gauge
LG-712	Seal Water Separator 45-763 Level Gauge
LG-713	Recovered VCM Collect Tank 45-764 Level Gauge
LG-714	Seal Oil Storage Drum 45-754 Level Gauge
LG-715	Deleted
LG-716	Blowdown Tank 45-319 Level Gauge
LG-717	Mechanical Seal Purge Water Surge Drum 45-759 Level Gauge
Level Instruments	
LI-701	Fresh VCM Storage Tank 45-745 Level Indicator
LAH-701	Fresh VCM Storage Tank 45-745 High Level Alarm
LS-701A, B, C and D	Fresh VCM Storage Tank 45-745 Level Switches
LA-702	Deleted
LA-703	Deleted
LI-704	Recovered VCM Storage Tank 89-520 Level Indicator
LA-705	Deleted
LA-706	Deleted
LI-707	Recovered VCM Storage Tank 45-317 Level Indicator
LA-708	Deleted
LA-709	Deleted
LAH-710	Colloid Makeup Tank 45-751 High Level Alarm
LI-711	Hot Water Tank 45-748 Level Indicator
LS-711A	Deleted
LA-711B, C, and D	Hot Water Tank 45-748 Level Switches
LA-712	Deleted
LAH-713	Colloid Storage Tank 45-752 High Level Alarm
LAH-714	Colloid Charge Tank 45-753 High Level Alarm
LSL-715	Colloid Charge Tank 45-753 Low Level Switch
LSH-716	Recovery Knockout Drum 45-760 High Level Switch
LSL-717	Recovery Knockout Drum 45-760 Low Level Switch
LSH-718	Recovery Knockout Drum 45-761 High Level Switch
LSL-719	Recovery Knockout Drum 45-761 Low Level Switch
LC-720	Seal Water Separator 45-762 Level Controller
LAH-720	Seal Water Separator 45-762 High Level Alarm
LAL-720	Seal Water Separator 45-762 Low Level Alarm
LA-721	Deleted
LC-722	Seal Water Separator 45-763 Level Controller
LAH-722	Seal Water Separator 45-763 High Level Alarm
LAL-722	Seal Water Separator 45-763 Low Level Alarm
LA-723	Deleted
LC-724	Recovered VCM Collect Tank 45-764 Level Controller
LIC-725	Slurry Dump Tank 45-766 Level Controller
LAH-725	Slurry Dump Tank 45-766 High Level Alarm

APPENDIX B

INSTRUMENT LIST - CONTINUED

Item No.	Service
Temperature Gauges	
TG-201	Reactor 45-781 Jacket Cooling Water Return Temperature
TG-202	Reactor Condenser 55-358 Cooling Water Return Temperature
Temperature Instruments	
TIRC-201	Reactor 45-781 Polymerization Temperature Controller
TAH-201 A & B	Reactor 45-781 High Temperature Alarms
TRC-202	Reactor 45-781 Steam Stripping Temperature Controller
TR-203	Reactor Condenser 55-358 Temperature Recorder
TW-205	Reactor 45-781 Cooling Water Return Thermowell

APPENDIX B

INSTRUMENT LIST - CONTINUED

Item No.	Service
Pressure Gauges	
PG-200	Reactor 45-781 Pressure Gauge
PG-202	Initiator Charge Pot 45-784 Pressure Gauge
PG-205	Reactor Condenser 55-358 Pressure Gauge
PG-206	Reactor 45-781 Steam Stripping Pressure Gauge
PG-212	Reactor 45-781 VCM Charge Pressure Gauge
PG-213	Reactor 45-781 Nitric Oxide Pressure Gauge
PG-222	Steam Tracina Manifold Pressure Gauge
Pressure Instruments	
PS-205	Reactor 45-781 Pressure Switch (Prevents dump before recovery)
PAH-206 A & B	Reactor 45-781 High Pressure Alarm
PR-206	Reactor 45-781 Pressure Recorder
PT-206	Reactor 45-781 Pressure Transmitter
PI-211	Reactor 45-781 Pressure Indicator (Manometer)
PS-212	Initiator Charge Pot Pressure Switch
PCV-216	Steam Tracing Pressure Reducing Valve
PCi-	AMS Emergency Kill System Nitrogen Pressure Regulator
Rupture Disc	
RD-200	Reactor 45-781 Rupture Disc
RD-201	Reactor Condenser 55-358 Rupture Disc
RD-204	Initiator Charge Pot 45-778 Rupture Disc
RD-206	Reactor 45-781 Rupture Disc
RD-207	Reactor 45-781 Rupture Disc
RD-208	Reactor 45-781 Rupture Disc
RD-209	Reactor 45-781 Rupture Disc
RD-210	AMS Emergency Kill Pot 45-786 Rupture Disc
RD-211	Reactor Condenser 55-358 Rupture Disc
Safety-Relief Valves	
PSV-200	Reactor 45-781 Relief Valve
PSV-201	Reactor Condenser 55-358 Relief Valve
PSV-202	AMS Emergency Kill Pot 45-786 Relief Valve
PSV-203	Reactor 45-781 VCM Charge Header Relief Valve
PSV-206	Reactor 45-781 Relief Valve
PSV-207	Reactor 45-781 Relief Valve
PSV-208	Reactor 45-781 Relief Valve
PSV-209	Reactor 45-781 Relief Valve
PSV-211	Reactor Condenser 55-358 Shell Relief Valve
PSV-212	Reactor 45-781 Jacket Relief Valve
PSV-213	Reactord Condenser 55-358 Relief Valve

OPERATING MANUAL
AMS EMERGENCY KILL SYSTEM
ABERDEEN PVC PLANT

September 1, 1981

FINAL ISSUE

Richard D. Melling

Work by: Richard D. Melling
Senior Process Engineer
Chemicals Division
Phocess Engineering Department

Interoffice Communication

To C. L. Miller, Aberdeen, Mississippi

From R.D. Melling, Ponca City, Oklahoma

Date September 1, 1981

Subject Emergency Kill System Operating Manual

The final issue of the Emergency Kill System Operating Manual is attached. This issue incorporates comments and suggestions from the August 18 plant review meeting.

Richard D. Melling

Richard D. Melling
Senior Process Engineer
Chemicals Division
Process Engineering Department

ms
Enc

CC:
RAF:SJV:PEM:JAD:MPB
CRM:JAB:JLW:JHM

File: A-20.3

TABLE OF CONTENTS

OPERATING MANUAL

AMS EMERGENCY KILL SYSTEM

ABERDEEN PVC PLANT

		Page No.
I.	INTRODUCTION	1
	A. PURPOSE	1
	B. OPERATOR RESPONSIBILITIES	1
	C. PROCESS INFORMATION	1
II.	GENERAL PROCESS DESCRIPTION	3
III.	SAFETY	5
IV.	OPERATING PROCEDURES	8
	A. INJECTION PROCEDURES	8
	B. ROUTINE OPERATION	12
	C. TESTING PROCEDURES	15
V.	APPENDIX	17
VI.	P&I DIAGRAMS	26

I. INTRODUCTION

A. Purpose

The purpose of the Emergency Kill System is to increase the reliability and effectiveness of equipment and procedures used to safely and quickly stop the polymerization reaction in the reactors. Stopping the reaction prevents excessive pressure buildup which can cause emergency releases through the reactor relief valves. This system allows any or all reactors to be shut down in an orderly and safe manner. This manual describes the system and the operator's responsibilities for operating and maintaining the system.

B. Operator Responsibilities

The operator is responsible for producing quality products in a safe and efficient manner. He fulfills his responsibilities by knowing the following and passing a written exam:

1. Understanding how his equipment functions.
2. Understanding what role each piece of equipment plays in the process.
3. Keeping a close and regular check on equipment.
4. Knowing how to spot malfunctions and correct them.
5. Keeping his area of responsibility safe and clean.
6. Keeping complete and accurate records.

C. Process Information

The polymerization reaction of VCM to form PVC gives off heat and accelerates as temperature increases. As the temperature increases, the reactor pressure also increases. It is therefore necessary to remove the heat of reaction with cooling

I. INTRODUCTION (CONTINUED)

C. Process Information (Continued)

water in the reactor jacket and condenser. Reactor agitation is also required to maintain uniform reactor mixing and efficient heat removal.

If reactor cooling and/or agitation is lost, the reaction must be stopped. Failure to do so would result in a runaway reaction with increasing temperature and pressure. The reactor pressure could increase until the rupture disk/safety valve assemblies would vent the reactor contents to the atmosphere. The new Emergency Kill System provides the capability of injecting up to 25 gallons of killing agent into each reactor either remotely from the control room or manually at the reactor top head platform. Killing agent can be injected into a reactor as soon as agitation is lost to take advantage of mixing caused by residual swirling motion. Maintaining cooling water flow after loss of agitation will also help mixing by refluxing in addition to removing heat of reaction.

II. GENERAL PROCESS DESCRIPTION

Refer to the attached P&I diagrams for the complete system layout for each reactor area.

Emergency kill injection pots are provided at grade level for each reactor. All injection pots are to be maintained at 300 psig pressure using high pressure nitrogen cylinders. A separate nitrogen cylinder and spare are provided for each injection pot. Level gauges and pressure gauges are provided on each pot in addition to board-mounted low pressure alarms and low level indicators. The A operator should check the appropriate injection pot level and pressure before starting each reactor charge sequence. Killing agent can be injected into the reactor either remotely by the lead operator or locally by the A operator. Normally, the emergency kill system will be activated from the board to minimize time and maximize mixing. One switch for each reactor operates automatic double block valves at the reactor top head level. Placing the switch in automatic mode opens the valves and allows a low level switch in the injection pot to close the valves. Placing the switch in the momentary-contact manual mode also opens the valves but the valves close when the switch is released. Each injection pot low level switch also activates a local light at the manual injection point at the reactor top head level. The automatic closure of the remote injection valves and the local low level indicator light are provided to prevent nitrogen from being injected into the reactor, blanketing the condenser and reducing cooling efficiency.

II. GENERAL PROCESS DESCRIPTION (CONTINUED)

Emergency injection headers are provided at the reactor top head level in each reactor area. These headers will allow any injection pot to be used to kill any reactor in each area or to inject additional killing agent if needed. The procedure requires two hoses, one to connect an injection pot to the header, and one to connect the header to the reactor. Killing agent can then be injected locally by the A operator or remotely by the lead operator. It should be noted that when the emergency injection header is used, the injection pot low level switch will neither automatically close the remote injection valves nor light the appropriate local indicator light. Caution should be taken to prevent charging nitrogen into the reactor.

The remote injection automatic valves will be operated by nitrogen supplied by a high pressure nitrogen cylinder and spare. A board-mounted low pressure alarm is provided for each area to alert the board operator when the cylinder in use has dropped below 600 psig. A cylinder with less than 600 psig pressure does not contain enough nitrogen to operate the control valves and should be immediately changed out with a full cylinder.

III. SAFETY

The operation of the emergency kill system does not present any extremely hazardous situations. In fact, it's main purpose is to reduce the potential for having hazardous situations in the reactor area. However, some potential hazards are present and precautions should be taken to prevent serious incidents.

A. The killing agent AMS has been in use for some time in the plant and the operators should already be familiar with the corresponding safety hazards and proper handling procedures. The attached vendor literature describes chemical properties and safe handling procedures. It should be emphasized that AMS is highly reactive in the presence of the peroxide initiators used in the plant. AMS AND INITIATOR SHOULD NEVER BE MIXED UNDER ANY CIRCUMSTANCES.

B. The new AMS injection pots will be maintained at 300 psig by high pressure nitrogen cylinders. Due caution should be exercised in the handling of nitrogen cylinders. Operators should avoid damaging the outlet valves on these cylinders. The AMS injection pots will contain AMS under 300 psig pressure, so proper safety precautions should be taken while working with or near these vessels.

The injection pots must be depressurized before the block valves on the pot funnel or AMS fill line are opened. The nitrogen supply to a pot should be turned off at the pot prior to venting the pot. The pots should only be vented through the bleed valve on the pressure gauge/pressure switch piping on the top of the pots. POTS SHOULD NEVER BE VENTED THROUGH THE FUNNELS ON THE SIDE OF THE POTS.

III. SAFETY (CONTINUED)

C. The rupture disk and relief valve assemblies for each injection pot are set to relieve at 400 psig, the vessel design pressure. Since nitrogen bottle regulators occasionally leak through, a potential exists for overpressuring the injection pots and causing the rupture disk to burst. Even if the killing agent didn't spray out when the relief devices opened, it is probable the relief valve would not completely reseat and the nitrogen bottle would slowly depressure through the pot and relief valve to atmosphere. The outside operator should routinely check injection pot pressures to insure it is neither too low nor too high.

D. The AMS killing agent is a volatile hydrocarbon, and thus fire and explosions are theoretically possible. Precautions should be taken to prevent spills and excessive accumulation of flammable vapors.

E. Since the injection pots are connected to the reactors, a potential exists for backing VCM into the pots. This poses no serious immediate problem since the AMS would kill any reaction that was occurring. However, it could present an exposure problem later when the injection pot is opened. The injection pots should be maintained at 300 psig pressure except when refilling.

F. Finally, operators should keep in mind that this system will be used when the plant is in an upset condition, i.e., power failure, loss of cooling water, reactor runaway, etc. It is

III. SAFETY (CONTINUED)

critical that this system must operate properly in such an emergency. System maintenance and operator familiarity with this system are equally important factors ensuring the dependability of this system.

IV. OPERATING PROCEDURES

A. Injection Procedures

1. The emergency kill system should be activated under the following circumstances:

   a. Extended loss of cooling water to a reactor in polymerization mode.

   b. Extended loss of agitation to a reactor in polymerization mode. When agitation is lost, it is important to kill the reaction as soon as possible. The reactor contents will continue to swirl for about four minutes after agitator shutdown, and AMS injection during this period is much more effective.

   c. A runaway reaction with increasing temperature and pressure which is not responding to small AMS injections (short stop) from the initiator charge pot.

   d. Any other circumstance considered by the operator to represent a significant chance of over pressuring the reactor or affecting safe operation of the plant.

2. The emergency kill system must be activated if the reactor reaches the following pressures for the following products:

a. 5305 with CTA	155 psig
b. 5305 without CTA	165 psig
c. All other products	145 psig

3. Lead Operator Duties

   a. The lead operator should remotely inject AMS into the polymerizing reactors which require killing by placing the appropriate hand switches in the AUTO mode.

IV. OPERATING PROCEDURES (CONTINUED)

A. Injection Procedures (Continued)

2. Lead Operator Duties (Continued)

b. The lead operator should then check for confirmation of AMS injection from the board-mounted low level indicating lights, and from the A operator via radio. Injection time should be about 30 seconds. The board-mounted injection pot low pressure alarms will normally be tripped during AMS injection. If the pressure and level alarms are not tripped, the automatic AMS injection line may be plugged requiring manual injection.

c. After AMS injection, the lead operator should closely monitor the reactor temperature and pressure. If cooling water has been lost, he should take steps to restore cooling as soon as possible.

d. If additional killing is required, the momentary-contact manual switch can be used. Caution should be exercised to prevent nitrogen from entering the reactor and blanketing the condenser.

e. If excess nitrogen does enter the reactor, the condenser should be vented to the recovery system.

3. A Operator Duties

a. The A operator is responsible for field-checking AMS injection to each of the reactors to be killed. He should confirm that the injection pot level is at the low level mark on the level gauge. Too high a level

IV. OPERATING PROCEDURES (CONTINUED)

A. Injection Procedures (Continued)

3. A Operator Duties (Continued)

means not enough AMS was injected. No level may mean nitrogen has entered the reactor.

b. The A operator should also check the pressures of the nitrogen cylinders used for AMS injection. Any cylinder with a pressure lower than 750 psig should be changed out to allow for a second AMS injection.

c. After checking the injection pot and nitrogen cylinders, the A operator should proceed to the reactor top level to confirm that the automatic injection valves are closed. If the valves are open, he should manually block in the line and inform the lead operator that nitrogen has entered the reactor. It may be necessary to vent nitrogen to the recovery system to maintain reactor cooling.

d. If the automatic injection system failed to work, the A operator should manually inject AMS to the reactor. He should open the manual double block injection valves, wait for the injection pot low level indicator light to light, then immediately close the double block valves. The valves should also be immediately closed if the line begins to vibrate from flowing nitrogen.

IV. OPERATING PROCEDURES (CONTINUED)

A. Injection Procedures (Continued)

3. A Operator Duties (Continued)

e. If additional injection is required, the A operator should prepare the emergency injection header for use. This header is supplied to allow any injection pot to be used for any reactor. This is accomplished by connecting one hose from a full and pressurized pot to the header and connecting a second hose from the header to the appropriate reactor. Injection can then proceed either locally or from the board. Caution should be exercized when using this header since the injection pot low level switches will not work correctly and nitrogen may enter the reactor.

f. As soon as possible after injection, the A operator should refill the empty AMS pots and prepare for a second injection if needed.

1. Close the block valve on the nitrogen supply line at the pot.

2. Depressure the pot through the pressure gauge vent valve.

3. Refill the pot with AMS from a 55-gallon drum using the air operated drum pump supplied with the system. An alternate filling procedure is to manually pour AMS into the funnel on the side of the injection pot.

IV. OPERATING PROCEDURES (CONTINUED)

A. Injection Procedures (Continued)

3. A Operator Duties (Continued)

f. (Continued)

4. Block in the pot and repressure with nitrogen from the nitrogen bottles.

g. Radio communication between the lead operator and the A operator should be maintained. The A operator should inform the lead operator how the system is operating and what is being done in the field. The lead operator should keep the A operator informed of reactor pressures and any apparent need for additional AMS injection.

B. Routine Operation

1. A reactor should not be charged unless its AMS injection system is in proper operating condition. It is the responsibility of the A operator to check this in the field and notify the lead operator prior to each reactor charge. The following items should be checked immediately before each charge:

a. The AMS level in the injection pot should be at the full mark on the level glass.

b. The pressure in the injection pot should be 300 psig. This should be checked both on the injection pot pressure guage and on the nitrogen cylinder regulator outlet pressure guage.

IV. OPERATING PROCEDURES (CONTINUED)

B. Routine Operation (Continued)

c. The block valve in the AMS line near the injection pot should be fully open.

d. The block valve in the AMS line at the reactor top head level near the hose connection should be fully open.

e. Both block valves on the manual AMS injection line should be fully closed.

If any of the above conditions are not met, they should be corrected before the reactor is charged.

2. To insure proper operation of the system, the following items should be checked by the A operator at the beginning of each shift:

a. The pressure of the nitrogen cylinders being used for AMS injection should be at least 1200 psig. Cylinders with lower pressures should be changed out with full cylinders. EMPTY BOTTLES ARE NOT TO BE LEFT IN THE BOTTLE RACKS.

b. The pressure of the nitrogen cylinder being used to actuate the automatic AMS injection valves should be at least 600 psig. Cylinders with lower pressures should be changed out with full cylinders. The pressure on the outlet of the regulator for this cylinder should be 100 psig.

IV. OPERATING PROCEDURES (CONTINUED)

B. Routine Operation (Continued)

c. The pressure gauges between the double block valves on both the automatic and the manual injection lines should routinely be bled to 0 psig. If pressure subsequently builds up on these guages, it indicates that one or both of the double block valves are leaking.

Note: These gauges will have pressure on them after AMS injection.

d. All spare nitrogen cylinders in the racks should be full, i.e., cylinder seals are intact.

The above items are vital to the proper operation of the emergency kill system. If any of these conditions are not met, they should be immediately corrected.

3. Other items which should be checked on a routine basis are:

a. The automatic AMS injection line reactor nozzles should be checked for plugging. This can be done while the reactor is being rinsed. Full port ball valves have been provided on this line so that a rod or long wire brush can be run through the line to knock out plugging. This line should be checked once a week when the system is being tested.

b. The manual AMS injection line reactor nozzles should also be checked for plugging on a weekly basis. This should be done in a manner similar to that used for checking the automatic injection line.

IV. OPERATING PROCEDURES (CONTINUED)

C. Testing Procedures

1. The AMS injection system for each reactor will be tested weekly on a schedule set up by the process superintendent. Each system will be checked for line pluggage and valve operation. The testing procedure is outlined below:

a. The A operator should perform a complete visual check of the system to be tested both at grade level and at the reactor top head level.

b. He should then contact the lead operator on the radio and confirm that the reactor and Emergency Kill System are ready to be tested.

c. He may then manually inject approximately one gallon of AMS to the reactor by opening the manual injection valves for approximately two seconds.

d. After AMS has been injected manually, the A operator should close the block valve near the hose connection and notify the lead operator that the automatic system is ready for testing. The lead operator may then remotely cycle the injection valves using the momentary-contact MANUAL mode of the control valve hand switch.

e. During automatic AMS injection testing, the A operator should be checking for proper operation of the system, i.e., control valves, actuators, and solenoids.

IV. OPERATING PROCEDURES (CONTINUED)

C. Testing Procedures (Continued)

f. After automatic injection testing, the A operator should rod out the vertical sections of line at both reactor injection nozzles to confirm the nozzles are not plugged.

3. The following must be done following a test prior to charging the reactor:

a. The pot should be refilled with AMS.

b. The pot should be pressurized to 300 psig.

c. The AMS injection nitrogen cylinder pressure should be checked (above 1200 psig).

d. The pressure of the nitrogen cylinder used to supply instrument air to the automatic AMS injection control valves should be checked (above 600 psig).

e. The manual block valve at the reactor top head level near the hose connection should be reopened.

V. APPENDIX

STORAGE AND HANDLING OF ALPHA-METHYL STYRENE

Alpha-Methyl styrene is usually stored and handled in steel equipment. It is also compatible with stainless steel, aluminum, and galvanized iron. Copper and copper alloys are not recommended for this service.

This product has a fairly low freezing point (about -10°F) and low viscosity. Underground storage tanks and lines should be considered, as their use will prevent freezing in winter and keep the product cool in summer. Storage temperature should not exceed 100°F. Storage under a nitrogen blanket is preferred; exclusion of air (oxygen) will reduce the chances of polymerization, peroxide formation, and fire.

Piping can be of the materials listed above. A centrifugal pump is suggested for transfer service. "Teflon" is suitable for gaskets and packing.

An inhibitor, para-tertiary butyl catechol (10-20 ppm), is used in alpha-methyl styrene to inhibit polymerization. If storage time is prolonged, the inhibitor concentration should be checked occasionally and more inhibitor added, if needed. Alpha-Methyl styrene is a toxic chemical; contact with liquid or vapors should be avoided.

α-METHYLSTYRENE

REPRODUCTIVE CHEMICAL HAZARDS

CHEMICAL NAME: α-Methylstyrene

SYNONYMS: Isopropenylbenzene, alpha-methylstyrene, 2-phenylpropene, 1-methyl-1-phenylethylene

CHEMICAL FORMULA: C_9H_{10}

CHEMICAL STRUCTURE: 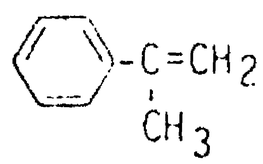

PHYSICAL PROPERTIES

Appearance	Water-white liquid
Molecular weight	118.18
Flammability limits, vol %, upper	6.1
lower	1.9
Flash point, open cup, °C (Tag)	52 (126°F)
closed cup, °C (Tag)	44 (112°F)
Autoignition temperature in air, °C	575 (1066°F)
Boiling point at 760 mm Hg, °C	165.4
at 10 mm Hg, °C	48.5
Freezing point, °C	-23.2
Vapor pressure, mm Hg at 20°C	1.9
Solubility, wt % in water (20°C)	<0.1
water in	<0.1
Specific gravity at 20/4°C	0.9106
Heat of vaporization at 1 atm, Btu/lb	140
Heat of combustion at 25°C, Btu/lb	17,748
Coefficient of expansion at 20°C, vol/°C	0.00096
Viscosity at 20°C, cps	0.94

Revised 3/15/76

Some significant reactions with the more common chemicals are briefly discussed below:

Oxidation - Forms aldehydes and peroxides if exposed to air (oxygen). Can be epoxidized and is attacked by strong oxidizing agents.

Hydrogenation - Can be hydrogenated catalytically in the presence of metals. The unsaturated vinyl group and the aromatic ring can both be hydrogenated under selective conditions.

Halogenation - Characteristic addition to the vinyl group and substitution on the aromatic ring can occur with halogens such as chlorine or bromine.

These exothermic addition reactions generally require catalysts and/or elevated temperatures and are not considered hazardous if properly controlled. However, reaction with chlorine which occurs at ambient temperatures can be violent in the presence of light. Accidental contact of α-methylstyrene with halogens or halogen-containing compounds must be prevented.

Acids - Under special conditions, the aromatic ring may be attacked by concentrated nitric or sulfuric acids. These reactions must be carefully controlled to avoid hazardous consequences. Also, hazardous oxidation may occur by contact with concentrated nitric acid.

Methoxylation - α-Methylstyrene can be reacted under special conditions with formaldehyde or CO-H_2 in the presence of a catalyst to yield an aldehyde or alcohol. This reaction is considered to be nonhazardous as it is unlikely to occur accidentally.

The above discussed reactions other than oxidation, halogenation, and polymerization are generally considered to be nonhazardous. However, when conducted in the plant or laboratory, all of the reactions of α-methylstyrene should be properly controlled to avoid hazardous consequences.

Revised 3/15/76

If the UCC customer wants to use rubber hoses for unloading tank trucks, the recommended materials are Viton A or polyethylene lining and steel or 304 SS fittings. Both Uniroyal and Goodyear manufacture rubber hoses with a Viton A or polyethylene liner. [redacted]. Other elastomers such as neoprene, butyl, buna-N, etc., are not recommended for handling AMS because they will be chemically attacked by the AMS. Another type of hose that can be used is 304 SS flexible metal hose. or Teflon-lined.

A-METHYL STYRENE

This is a summary of single exposure studies on animals. The data indicate the relative degree of hazard in handling the product. Increasing degrees of hazard are expressed by these terms: slight, moderate, definite, serious. It must be remembered that results of experiments on animals cannot be numerically translated to probable human response.

The National Research Council defines toxicity as the capacity of a substance to produce injury. Hazard is the probability that injury will result from the handling or use of the substance in the quantity, frequency and manner proposed.

Toxicity is only one factor important in determining the degree of hazard in handling a chemical or in a proposed use. Physical properties of the chemical together with extent and frequency of exposure are equally important.

The term LD_{50} has been adopted as a uniform expression of single dose toxicity for comparing one chemical with another. It refers to that quantity of chemical which kills 50 per cent of exposed animals. For further uniformity, quantities are expressed in grams or milliliters of chemical per kilogram of animal body weight.

Single skin penetration refers to a covered 24-hour skin contact with the liquid chemical.

Single inhalation refers to continuously breathing a certain concentration of chemical vapors for a specified period of time.

Primary irritation refers to the skin response following uncovered skin contact. A covered contact can be expected to have a more severe effect.

Eye injury refers to surface damage produced by contact of the eye with the chemical.

Legal responsibility is assumed only for the fact that all studies reported here, and all opinions, are those of qualified experts.

Single oral dose in rats: moderate hazard.
LD_{50} = 6.50 ml per kilogram of body weight.
For comparison, isopropanol has an LD_{50} of 5.84 grams/kg.

Single skin penetration in rabbits: slight hazard.
16.0 ml/kg body weight killed 3 of 7 animals from a 24 hour covered exposure.
This result suggests that skin penetration in harmful amounts is not apt to occur.

Single inhalation by rats: slight hazard.
Breathing vapors in a state approaching saturation in room air for 8 hours killed 2 of 6 animals.

Skin irritation, rabbit belly: moderate hazard.
The undiluted chemical caused redness of short duration on the tender skin of the rabbit belly.

Eye injury, rabbits: slight hazard.
The undiluted chemical caused no irritation when an excess was instilled in the rabbit eyes.

TYPED
5/24/77

For Further Information Write To:
Industrial Medicine and Toxicology Department
UNION CARBIDE CORPORATION
New York, N.Y. 10017

VAB.0001146836

TLVs — Threshold Limit Values

(for 1979)

Substance	TWA ppm[a]	TWA mg/m³[b]	STEL ppm[a]	STEL mg/m³[b]
Acetone	750	1780	1000	2375
Acetylsalicylic acid (Aspirin)	—	5	—	—
† Acrylic acid	10	30	—	—
Acrylamide	A1b	A1b	—	—
Acrylic and homologues — Skin	2	10	5	20
Antimony, soluble salts (as Sb)	—	2	—	—
Antimony trioxide production	—	—, A2	—	—
Arsenic (soluble), as As	—	0.2	—	—
Arsenic trioxide production	—	—, A2	—	—
Asptex	—	0.1	—	0.3
† Butane	800	1900	—	—
† 2-Butoxyethanol (Butyl Cellosolve)-Skin	25	120	75	360
† sec-Butyl alcohol	100	305	150	455
† n-Butyl glycidyl ether (BGE)	25	135	—	—
o-sec Butylphenol — Skin	5	—	—	—
Cadmium oxide production	—	—, A2	—	—
Carbon disulfide	10	30	—	—
† Carbon tetrachloride — Skin	5, A2	30, A2	20	125
† Carbonyl fluoride	2	5	5	15
Chloroacetyl chloride	0.05	0.2	—	—
Chloromethyl methyl ether	A1b	A1b	—	—
† 1-Chloro-1-nitropropane	2	10	—	—
† Chloropentafluoroethane	1000	6320	—	—
β-Chloroprene — Skin	10	45	—	—
† Chromium metal	—	0.5	—	—
† Chromium (II) compounds (as Cr)	—	0.5	—	—
† Chromium (III) compounds (as Cr)	—	0.5	—	—
† Chromium (VI) compounds (as Cr) Water soluble Cr VI compounds	—	0.05	—	—
Certain water insoluble Cr VI compounds	—	0.05, A1a	—	—
† Chrysene	A2	A2	—	—
Cobalt metal, dust & fume (as Co)	—	0.05	—	0.1
C Cyanogen chloride	0.3	0.6	—	—
† Cyclohexanone	25	100	100	400
† Cyclopentane	600	1,720	900	2,580
Dalapon	1	—	—	—
1, 2-Dibromoethane — Skin	A1b	A1b	—	—

Substance	TWA ppm[a]	TWA mg/m³[b]	STEL ppm[a]	STEL mg/m³[b]
† 1, 1-Dichloro-1-nitroethane	2	10	10	60
Dichloropropene	1	5	10	50
Diethanolamine	3	15	—	—
† Diethylamine	10	30	25	75
† Diethyl ketone	200	705	—	—
† Diglycidyl ether (DGE)	0.1	0.5	—	—
† Dioxane, tech. grade — Skin	25	90	100	360
† Dipropyl ketone	50	235	—	—
Divinyl benzene	10	50	—	—
Epichlorhydrin — Skin	2	10	5	20
† 2-Ethoxyethanol — Skin	50	185	100	370
† 2-Ethoxyethyl acetate (Cellosolve acetate) — Skin	50	270	100	540
† Ethyl acrylate — Skin	5	20	25	100
Ethylene dibromide, see 1, 2-Dibromoethane	A1b	A1b	—	—
Ethylene dichloride, see 1, 2-Dichloroethane	10	40	15	60
†C Ethylene glycol, vapor	50	125	—	—
† Ethylene glycol dinitrate	0.02	0.2	0.04	0.4
† Ethylene oxide	10	20	—	—
† Furfural — Skin	2	8	—	—
† Glycidol (2, 3-Epoxy-1-propanol)	25	75	100	300
Hexachlorobutadiene	A2	A2	—	—
† Hexane (n-hexane)	25	90	100	350
(other isomers)	500	1,800	—	—
† Hexone (Methyl isobutyl ketone) — Skin	50	205	75	300
C Hydrogen cyanide — Skin	10	10	—	—
2-Hydroxypropyl acrylate — Skin	0.5	3	—	—
† Isopropoxyethanol	25	105	75	320
n-Isopropylaniline — Skin	2	10	5	20
† Mesityl oxide	15	60	25	100
† Methacrylic acid	20	70	—	—
† Methyl n-amyl ketone (2-Heptanone)	50	235	100	465
† Methyl bromide — Skin	5	20	15	60
† Methyl n-butyl ketone	5	20	—	—
† Methyl chloride	50	105	100	205
Methylene chloride (dichloromethane)	100	360	500	1,700
4, 4-Methylene dianiline	0.1	0.8	0.5	4
† Methyl iodide — Skin	2, A2	10, A2	5	30
† Methyl isopropyl ketone	200	705	—	—
† Methyl silicate	1	6	5	30
† α-Methyl styrene	50	240	100	485
† Nitrogen dioxide	3	6	5	10
† Nitroglycerin	0.02	0.2	0.04	0.4
† 1-Nitropropane	15	55	25	90

Substance	TWA ppm[a]	TWA mg/m³[b]	STEL ppm[a]	STEL mg/m³[b]
† Phenyl ether — Diphenyl mixture (vapor)	0.5	4	2	[illegible]
Phosphorous pentachloride	0.1	1	—	—
† Platinum metal	—	1	—	—
† β-Propiolactone	0.5, A2	1.5, A2	1	[illegible]
Propionic acid	10	30	15	[illegible]
† Propylene glycol dinitrate	0.02	0.2	0.04	[illegible]
† Propylene oxide	20	50	—	—
Silver, metal	—	0.1	—	—
† Silver, soluble compounds (as Ag)	—	0.01	—	—
Sodium bisulfite	—	5	—	—
Sodium metabisulfite	—	5	—	—
† Styrene, monomer (phenylethylene)	50	215	100	[illegible]
Sulfur dioxide	2	5	5	[illegible]
C Terphenyls	0.5	5	—	[illegible]
Tetrasodium pyrophosphate	—	5	—	—
† Toluene-2, 4-diisocyanate (TDI)	0.005	0.04	0.02	0.1
† Tributyl phosphate	0.2	2.5	0.4	
Trichloroacetic acid	—	1	—	—
† Trichloroethylene	50	270	150	[illegible]
† Trimellitic anhydride	0.005	0.04	—	—
† Vanadium (V_2O_5), as V, dust & fume	—	0.05	—	—
Vinyl bromide	5, A2	20, A2	—	—
Vinyl chloride	5, A1a	10, A1a	—	—
† Vinyl toluene	50	240	100	[illegible]
† Wood dust, hard wood (as in furniture making)	—	1	—	—

NOTICE OF INTENDED CHANGES
MINERAL DUSTS

Substance	TLV
Asbestos	
Amosite	0.5 fiber/cc, A1a
Chrysotile	2 fibers/cc, A1a
Crocidolite	0.2 fiber/cc, A1a
Tremolite	0.5 fiber/cc, A1a
Other forms	2 fibers/cc, A1a
Diatomaceous earth, natural	1.5 mg/m³, Respirable dust
Silica, amorphous	6 mg/m³, Total dust (all sampled sizes)
	3 mg/m³, Respirable dust (< 5 μm)
Talc (fibrous)	0.5 fiber/cc

MATERIAL SAFETY DATA SHEET

(Approved by U.S. Department of Labor "Essentially Similar" to Form LSB-OOS-4)

A

PRODUCT NAME: *alpha*-METHYLSTYRENE

CHEMICAL NAME: --- CHEMICAL FAMILY: Aryls

FORMULA: $C_6H_5C(CH_3):CH_2$ MOLECULAR WEIGHT: 118.18

SYNONYMS: Isopropenylbenzene; α-methylstyrene; 2-phenylpropene; 1-methyl-1-phenylethylene

I. PHYSICAL DATA

BOILING POINT, 760 mm. Hg	165.4°C.(329.7°F.)	FREEZING POINT	-23.2°C.
SPECIFIC GRAVITY (H_2O = 1)	0.9116 at 20/20°C.	VAPOR PRESSURE AT 20°C.	1.9 mm. Hg
VAPOR DENSITY (air = 1)	4.1	SOLUBILITY IN WATER, % by wt.	0.06
PER CENT VOLATILES BY VOLUME	~100	EVAPORATION RATE (Butyl Acetate = 1)	0.22
APPEARANCE AND ODOR	Colorless liquid; characteristic odor.		

II. HAZARDOUS INGREDIENTS

MATERIAL	%	TLV (Units)
Methylstyrene	~100	100 ppm. ceiling
(See Sections III through VIII)		See 1978 Notice of Intended Ch.

III. FIRE AND EXPLOSION HAZARD DATA

FLASH POINT (test method(s))	112°F., Tag closed cup ASTM D 56 126°F., Tag open cup ASTM D 1310

FLAMMABLE LIMITS IN AIR, % by volume	LOWER	1.9	UPPER	6.1

EXTINGUISHING MEDIA	Use carbon dioxide or dry chemical for small fires. Use foam (alcohol, polymer, or ordinary) for large fires.
SPECIAL FIRE FIGHTING PROCEDURES	Self-contained breathing apparatus should be available to firemen.
UNUSUAL FIRE AND EXPLOSION HAZARDS	None

EMERGENCY PHONE NUMBER

304/744-3487

This number is available days, nights, weekends, and holidays.

While Union Carbide Corporation believes that the data contained herein are factual and the opinions expressed are those of qualified experts regarding the results of the tests conducted, the data are not to be taken as a warranty or representation for which Union Carbide Corporation assumes legal responsibility. They are offered solely for your consideration, investigation, and verification. Any use of these data and information must be determined by the user to be in accordance with applicable Federal, State, and local laws and regulations.

VAB 0001146828

IV. HEALTH HAZARD DATA

THRESHOLD LIMIT VALUE	100 ppm. -- not to be exceeded. Value from ACGIH (1976)
EFFECTS OF OVEREXPOSURE	Vapors cause irritation of eyes, nose, and throat. Headache, nausea, and vomiting may occur. Eyes are irritated by the liquid.
EMERGENCY AND FIRST AID PROCEDURES	Remove to fresh air and call a physician. In case of contact, flush skin or eyes with plenty of water for at least 15 minutes. Call a physician for eyes.

V. REACTIVITY DATA

STABILITY			
UNSTABLE	STABLE	CONDITIONS TO AVOID	Avoid heat and open flame.
--	√		

INCOMPATIBILITY (materials to avoid)	Avoid contamination with oxygen, strong acids, chlorine.
HAZARDOUS DECOMPOSITION PRODUCTS	Burning can produce carbon monoxide and/or carbon dioxide.

HAZARDOUS POLYMERIZATION			
May Occur	Will not Occur	CONDITIONS TO AVOID	Avoid contamination with peroxides, strong mineral acids, metal halides, and similar polymerization catalysts. Para-tertiary butyl catechol is used as inhibitor; maintain its concentration at 10-20 ppm.
√	--		

VI. SPILL OR LEAK PROCEDURES

STEPS TO BE TAKEN IF MATERIAL IS RELEASED OR SPILLED	Wear suitable protective equipment. Collect for disposal. Toxic to fish; avoid discharge to natural waters. See Section VIII.
WASTE DISPOSAL METHOD	Incinerate in a furnace where permitted under appropriate Federal, State, and local regulations. Absorb on paper, evaporate on glass dish, then burn paper.

VII. SPECIAL PROTECTION INFORMATION

RESPIRATORY PROTECTION (specify type)		Air-supplied mask in confined areas		
VENTILATION	LOCAL EXHAUST	May be needed	SPECIAL	—
	MECHANICAL (general)	✓	OTHER	—
PROTECTIVE GLOVES		Rubber	EYE PROTECTION	Monogoggles
OTHER PROTECTIVE EQUIPMENT		Eye bath and safety shower		

VIII. SPECIAL PRECAUTIONS

alpha-METHYLSTYRENE

PRECAUTIONARY LABELING

DANGER! CAUSES BURNS
COMBUSTIBLE

Do not get in eyes, on skin, on clothing.
Keep away from heat and open flame.
Avoid breathing vapor.
Keep container closed.
Use with adequate ventilation.
Wash thoroughly after handling.

FIRST AID: In case of contact, immediately flush eyes or skin with plenty of water for at least 15 minutes while removing contaminated clothing and shoes. Call a physician. Wash clothing before reuse.

FOR INDUSTRY USE ONLY

OTHER HANDLING AND STORAGE CONDITIONS

Store under a nitrogen atmosphere; forms acetophenone, aldehydes, and peroxides if stored under air. Dangerous concentrations of peroxides are not expected to form in normal storage and handling, but storage under a nitrogen atmosphere is recommended.

This chemical floats on water, is resistant to rapid biodegradation, and is highly toxic to aquatic life. Spills should not be flushed to sewers or waterways. The preferred method of disposal is to dilute with a non-reactive solvent or fuel stream and incinerate.

Ground areas can be covered with sand or sawdust after most of the spilled material has been removed. Absorbing materials, after use on small spills, should be disposed of in an approved chemical landfill or by burning.

CAUTION: Do not use clays, micas, or acidic materials which might catalyze polymerization, as absorbents. Personnel engaged in disposal work should avoid contact of wastes by wearing proper protective clothing.

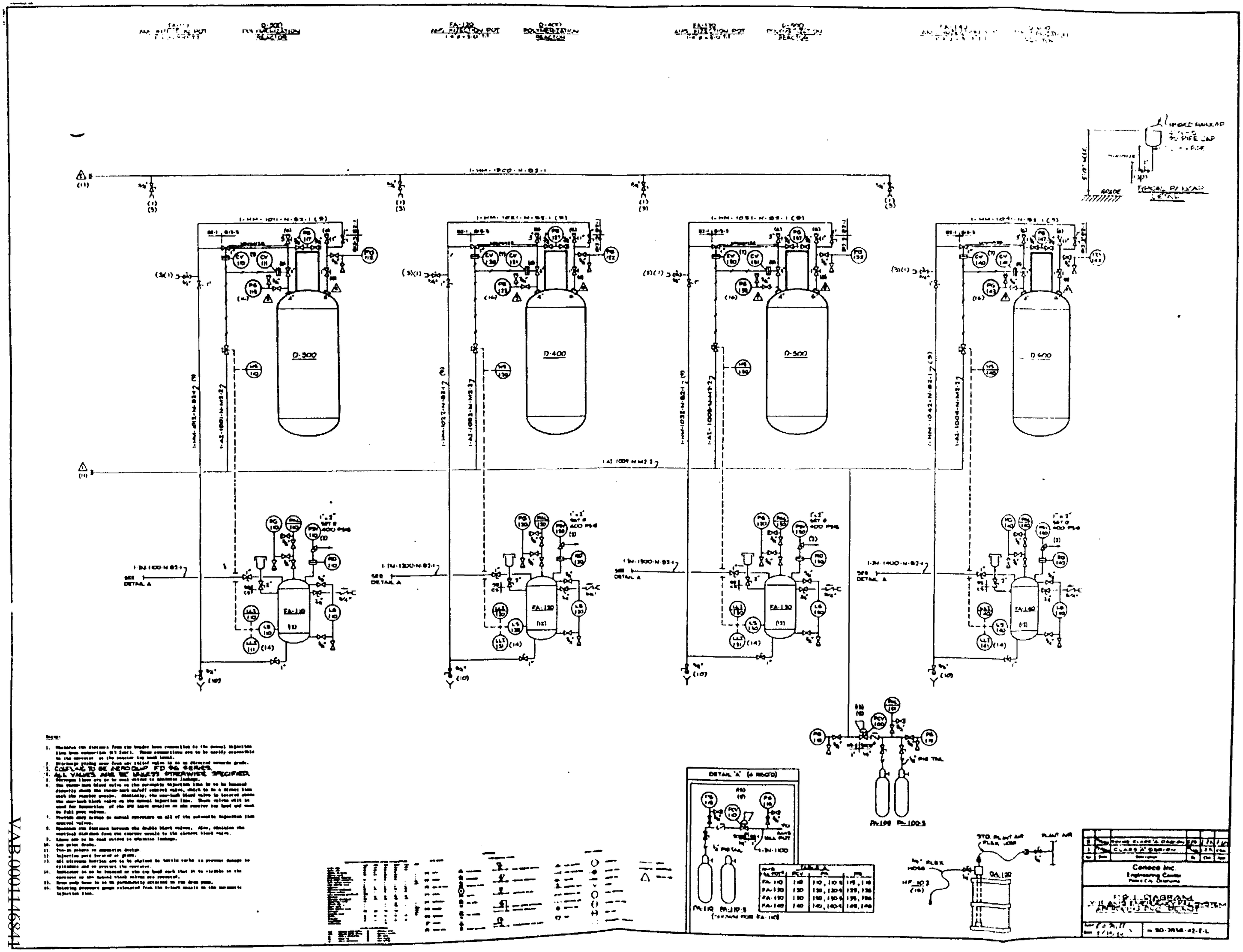

VAB-00011468

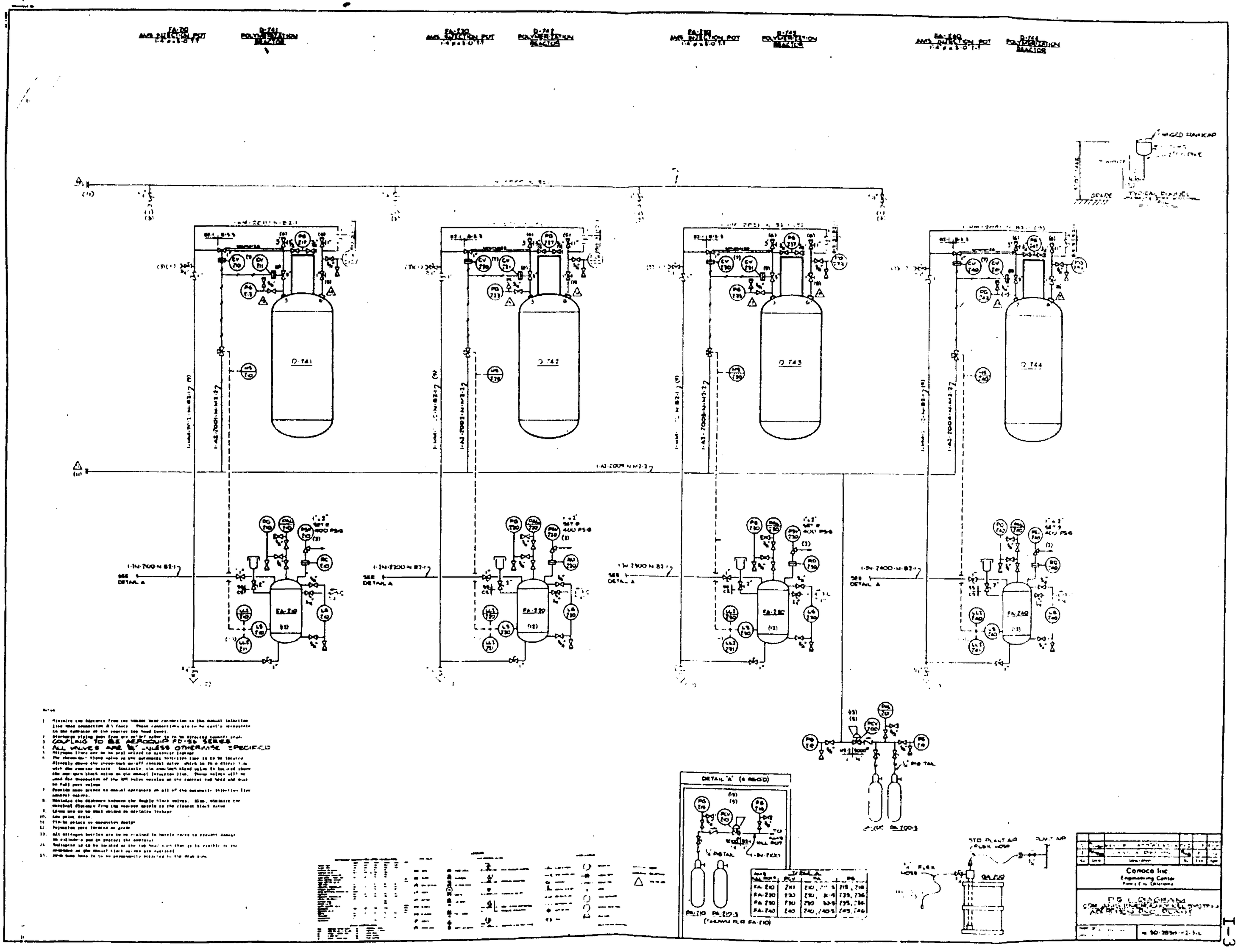

VAB.0001146842

I-3

REACTOR SECTION 45-742

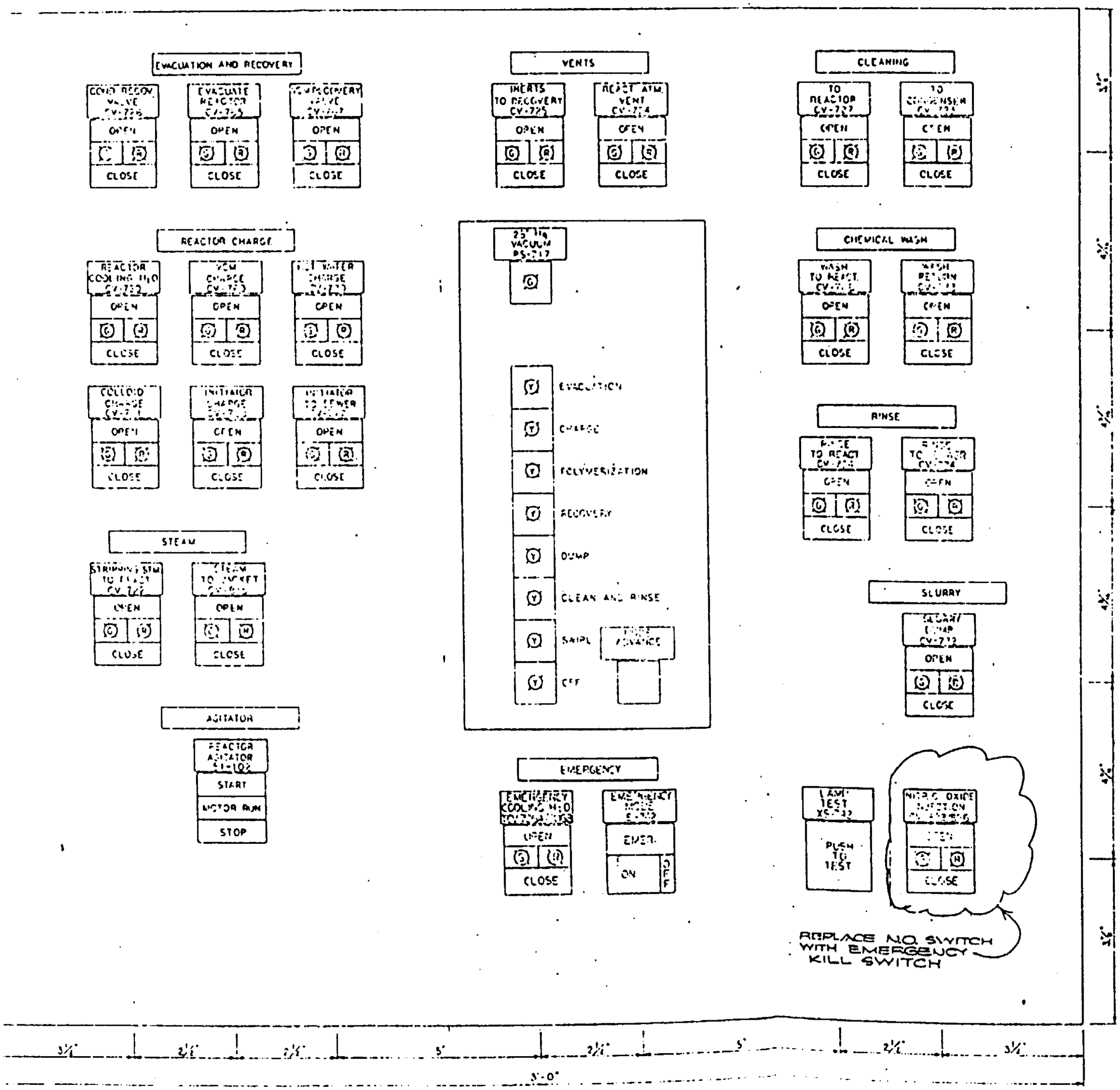

VAB.0001146843

T. LLEPSEN PETRO-CH

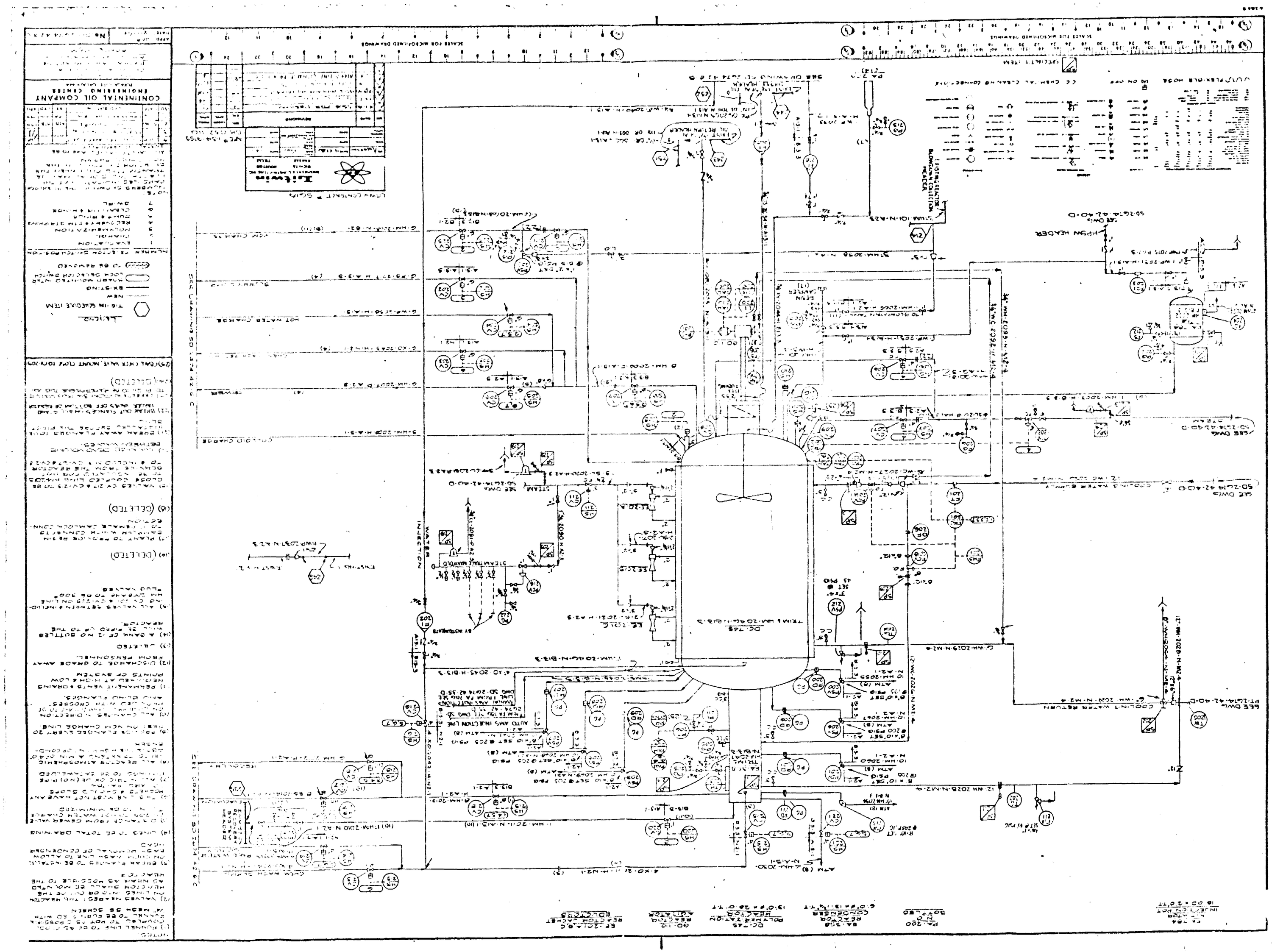

VAB.0001146844

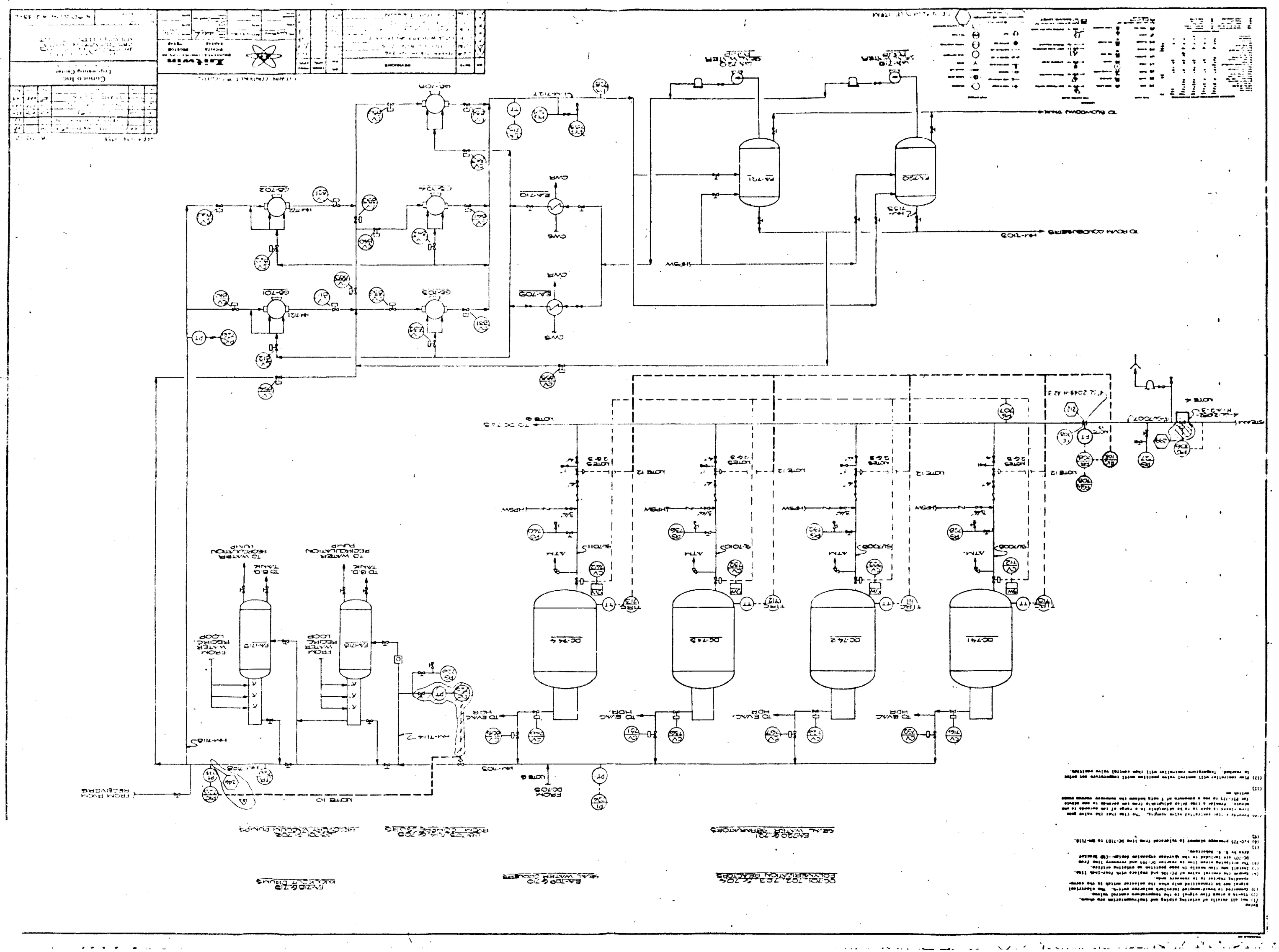

VAB.0001146845

VAB.0001146846

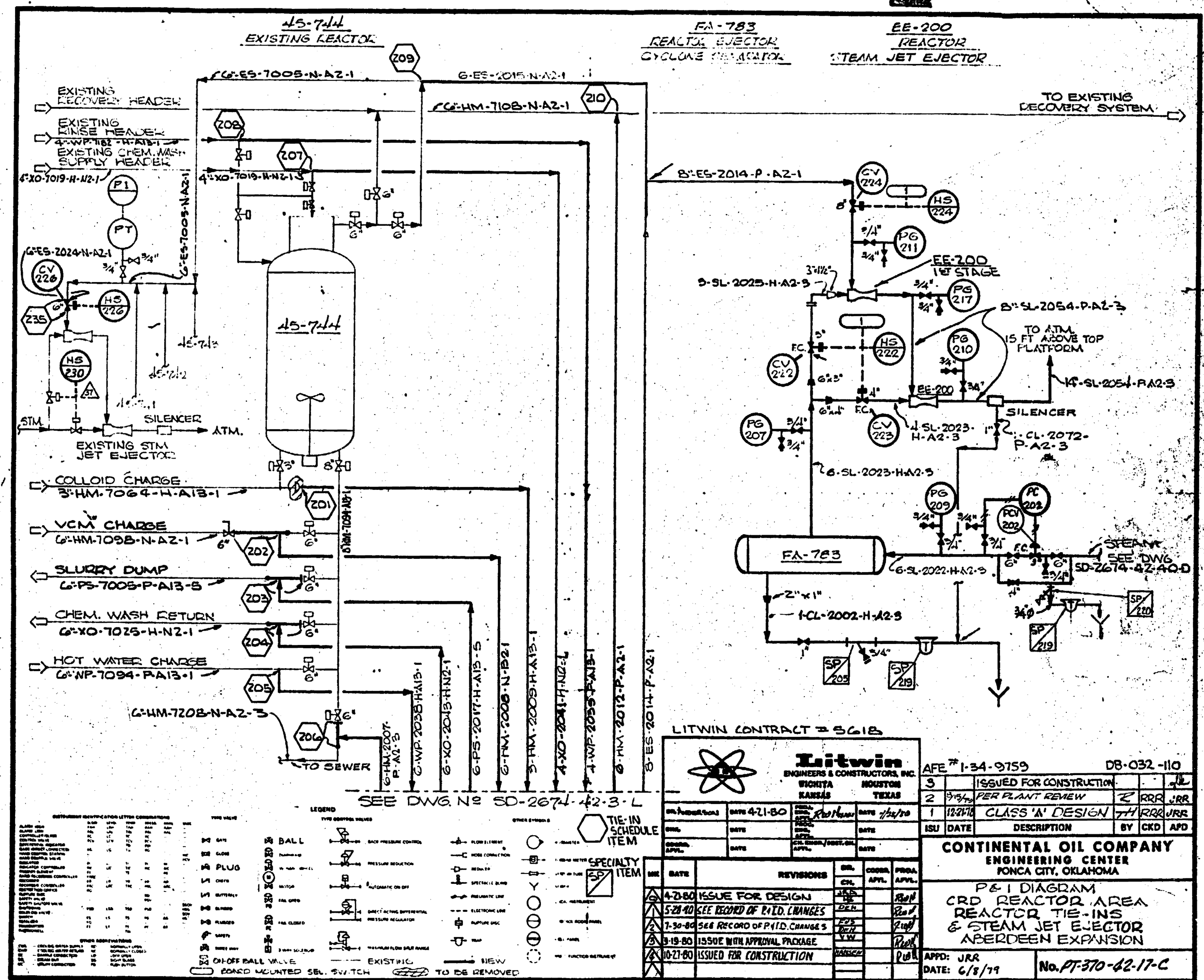

VAB.0001146847

FA-786
EMERGENCY
AMS KILL POT

PA-201 & PA-202
AMS INJECTION
NITROGEN CYLINDER
& SPARE

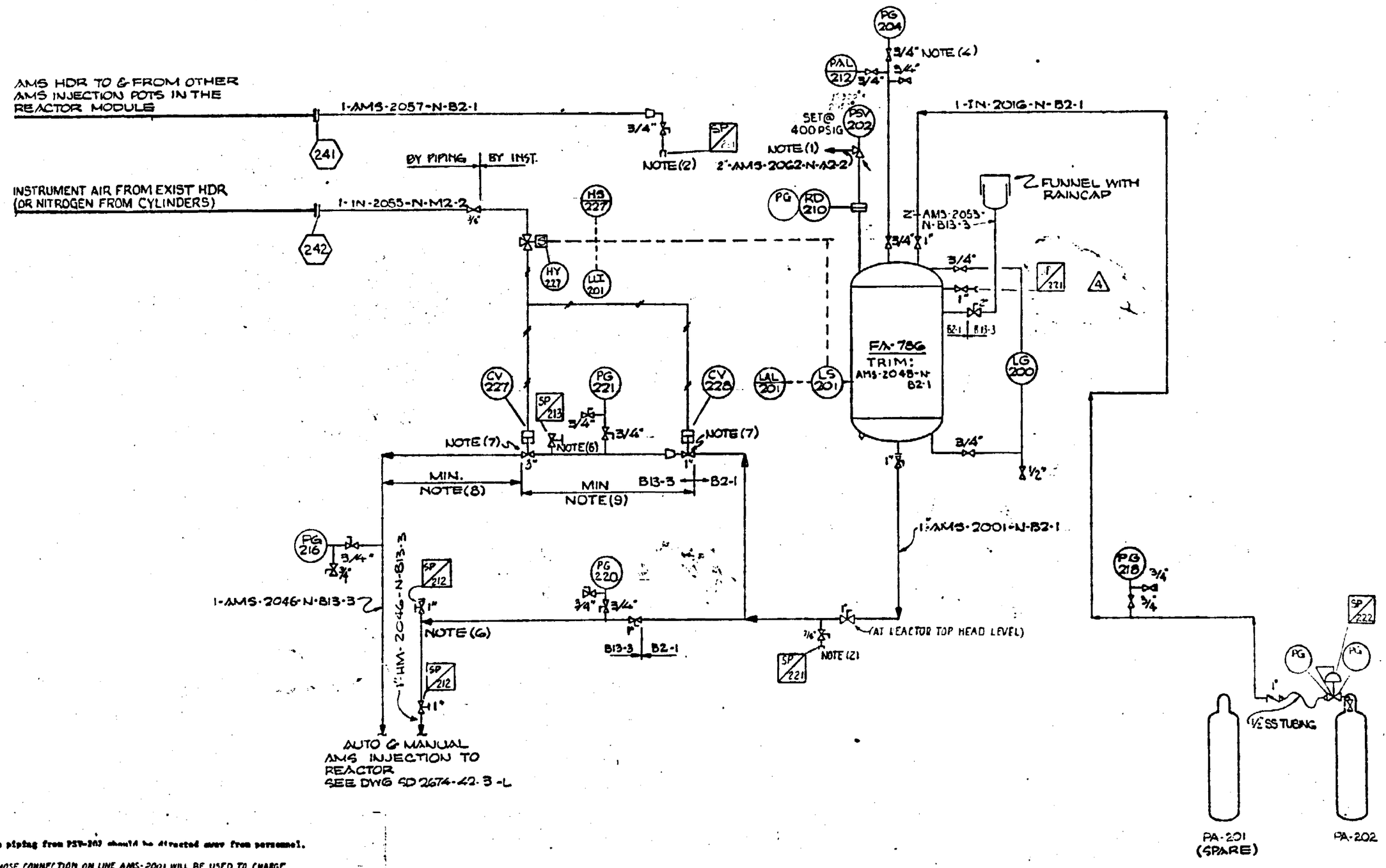

Notes:
(1) The discharge piping from PSV-202 should be directed away from personnel.

(2) THE 3/4 INCH HOSE CONNECTION ON LINE AMS-2001 WILL BE USED TO CHARGE AMS to any reactor in the module via flex hose from the AMS Injection HDR, line AMS-2057 These hose connections should be easily accessible.
(3) DELETED
(4) Discharge of the bleed valve for PG-204 should be directed away from personnel.
(5) The nitrogen, instrument air line to CV-227 and CV-228 is to be welded to minimize leakage.
(6) The two each bleed valve on auto injection is to be located directly above CV-227 on the reactor head. The same should be true of the one each bleed and block valves on manual injection. These bleed and block valves will be used for inspection of the AMS faint nozzles on the reactor and must be full port ball valves.
(7) Provide easy access to the manual operators on valves CV-227 and CV-228.
(8) Minimize the distance between CV-227 and the vertical piping to the reactor.
(9) MINIMIZE THE DISTANCE BETWEEN CV-227 AND CV-228

L E G E N D
- NEW
- EXISTING
- PLUG VALVE
- GATE VALVE
- FULL PORT BALL VALVE
- BALL VALVE
- TIE-IN SCHEDULE ITEMS

AFE # 1-34-9759 DB-032-110

ISU	DATE	DESCRIPTION	BY	CKD	APD
3	7-4-81	REVISED PER LITWIN REVISION #4	DTM		
2		ISSUED FOR CONSTRUCTION			
1	9/1/80	REVISION #2		RDB	RDM

INI	DATE	REVISIONS	DRL. CHL.	CROSS. APPL.	PROJ. APPVL.
4	2-2-81	SP-221 WAS SP-214	LWT		
3	10-17-80	ISSUED FOR CONSTRUCTION			
2	9-15-80	ISSUE WITH APPROVAL PACKAGE			
1	7-30-80	SEE RECORD OF P&ID CHANGES			
0	5-2-80	ISSUED FOR DESIGN			

LITWIN CONTRACT # 5618

Litwin
ENGINEERS & CONSTRUCTORS, INC
WICHITA KANSAS HOUSTON TEXAS

CONTINENTAL OIL COMPANY
ENGINEERING CENTER
PONCA CITY, OKLAHOMA

P&I DIAGRAM
CRD REACTOR AREA
EMERGENCY AMS KILL SYSTEM
ABERDEEN EXPANSION
ABERDEEN, MISS.

APPD: R D McH...
DATE: 5/9/80
NO. PF-370-42-13-D

FORMERLY SD-2674-42-35-D

VAB.0001146848

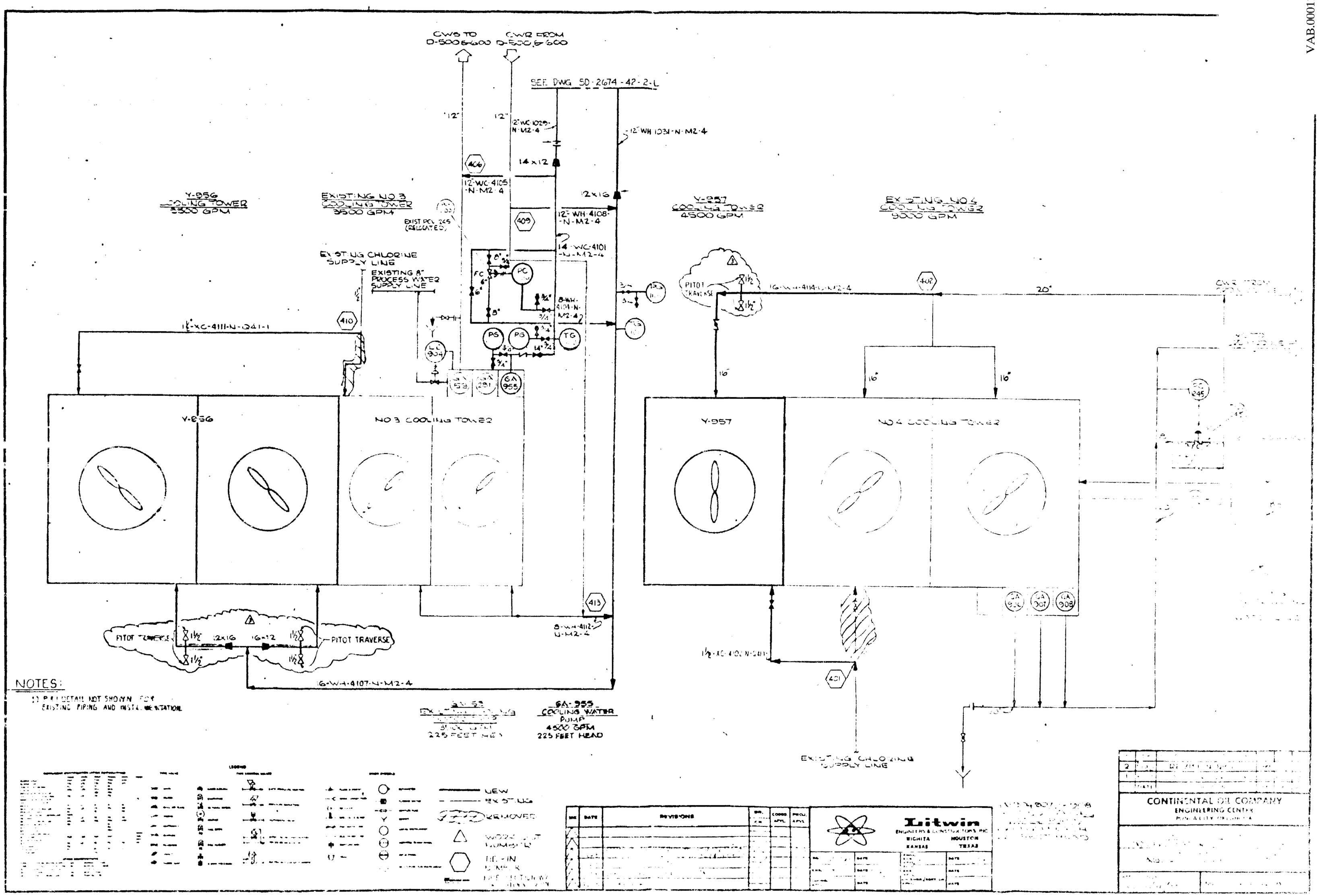

VAB.0001146849

INITIATOR
STORAGE FREEZER
80-C18
CAPACITY: 600 BOTTLES
OPERATING TEMP: -10°F

Litwin
ENGINEERS & CONSTRUCTORS INC
WICHITA KANSAS · HOUSTON TEXAS

DR.	DATE	ENG.	DATE
CHK.	DATE	ENG. CHIEF	DATE
COORD. APVL	DATE	CH. ENGR/ARCHITECT APVL	DATE

3		REVISIONS	
2		ISSUED FOR DESIGN	
1		ISSUED FOR PURCHASE	

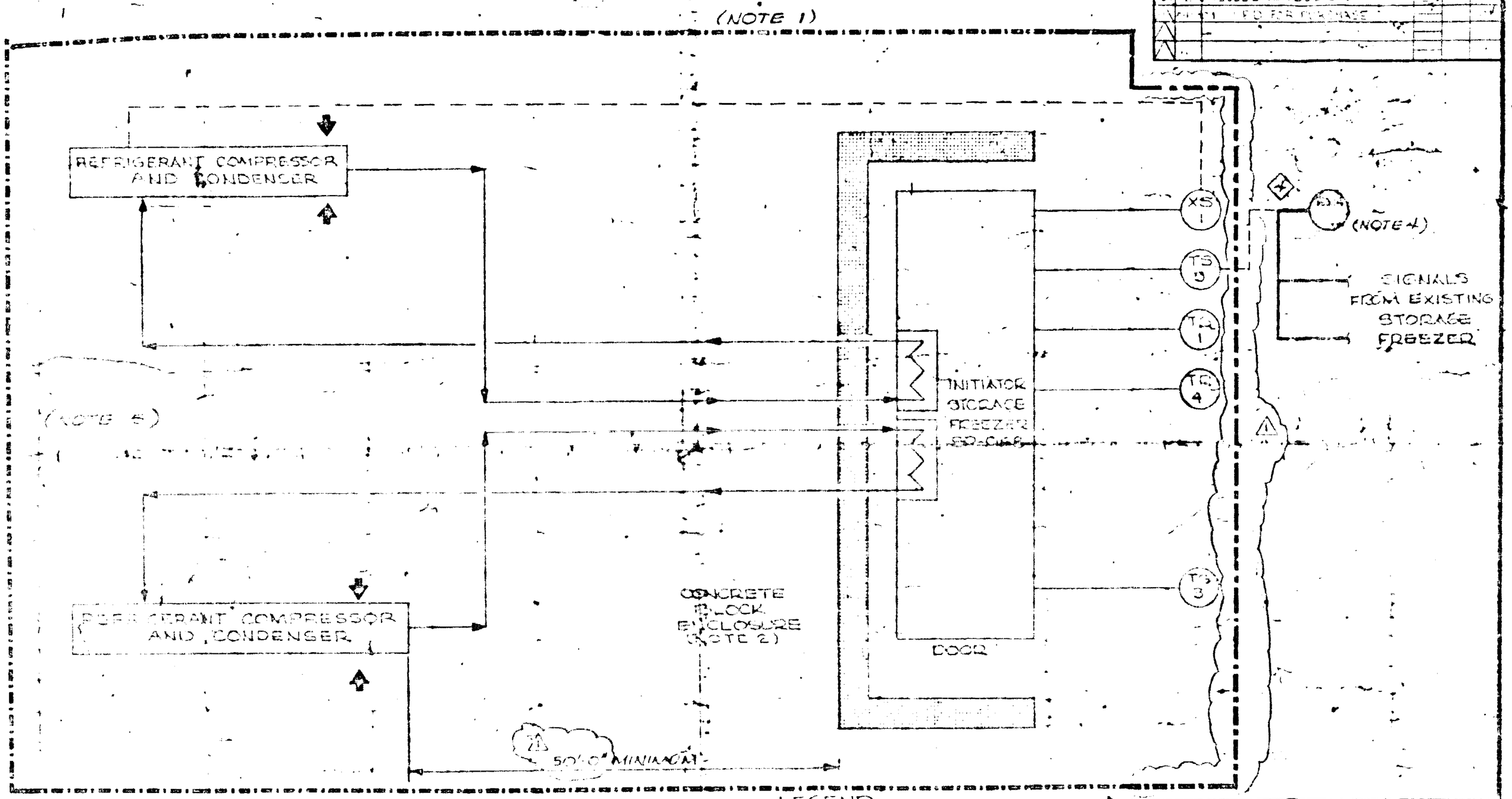

NOTES:

1) BY INITIATOR STORAGE FREEZER VENDOR WITH INSTRUMENTS.
2) CONTRACTOR TO PROVIDE A CONCRETE BLOCK BUILDING FOR THE INITIATOR STORAGE FREEZER TO PROTECT IT FROM THE WEATHER. DIMENSIONS TO BE DETERMINED BY THE CONTRACTOR AND TO BE INCLUDED TO PROTECT THE EQUIPMENT FROM THE WEATHER.
3) DELETED
(4) EXISTING ALARM IS A LOCAL RED BEACON LIGHT & AIR HORN.
(5) A SHED IS TO BE ERECTED TO PROTECT THE REFRIGERATION UNITS FROM THE WEATHER.
(6) DELETED

LEGEND

XS	OPEN DOOR SWITCH
TS	TEMP. SWITCH
TG	TEMP. GAUGE
TR	TEMP. RECORDER
XA	OPEN DOOR ALARM
TAH	HIGH TEMP ALARM
- - -	ELECTRONIC SIGNAL
—	NEW
—	EXISTING
○	LOCAL INSTRUMENT
◇	TAG NUMBER

3	[illegible]	REVISIONS	[illegible]	[illegible]	[illegible]
2	[illegible]	ISSUED "A" DESIGN	[illegible]	[illegible]	[illegible]
1	[illegible]	ISSUED "A" [illegible]	[illegible]	[illegible]	[illegible]
ISU	DATE	DESCRIPTION		BY	CHK.

CONTINENTAL OIL COMPANY
ENGINEERING CENTER
PONCA CITY, OKLAHOMA

[illegible] ALARM
ADDITIONAL INITIATOR
STORAGE FREEZER
ARTESIAN EXPANSION
ARTESIAN EVC PLANT

APVD. [illegible]
DATE [illegible]
[illegible]

VAB.0001146850

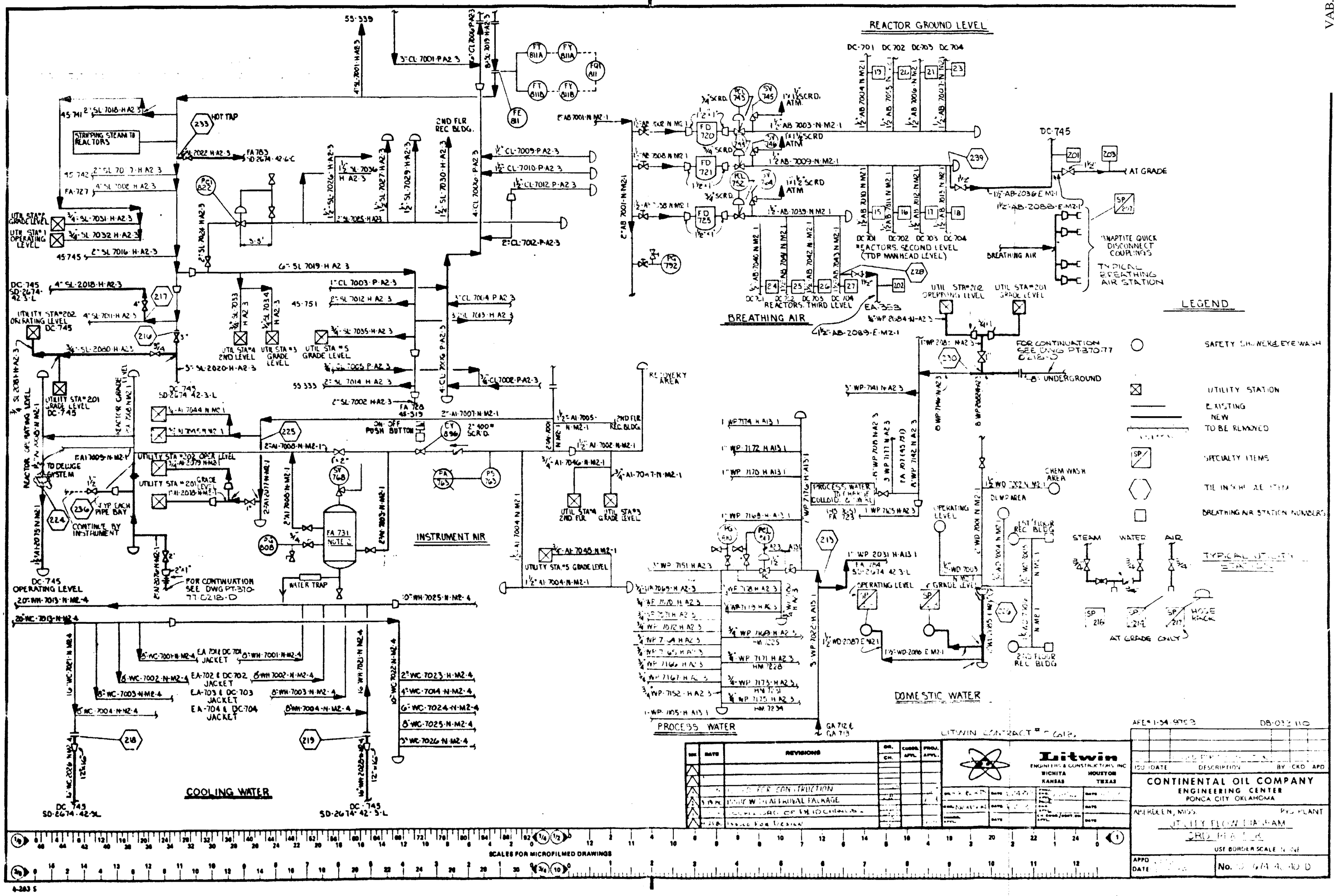

NO.	DATE	REVISIONS	DR. CH.	CHECK. APPL.	PROJ. APPL.
		ISSUED FOR CONSTRUCTION			
		ISSUED WITH ARTIFICIAL PACKAGE			
		ISSUED FOR DESIGN			

Litwin ENGINEERS & CONSTRUCTORS, INC. WICHITA KANSAS HOUSTON TEXAS

LITWIN CONTRACT # 5 6012

AFE # 1-54-9753 DB-032-110

ISSUE DATE	DESCRIPTION	BY	CKD	APD

CONTINENTAL OIL COMPANY
ENGINEERING CENTER
PONCA CITY OKLAHOMA

ABERDEEN, MISS. PVC PLANT

UTILITY FLOW DIAGRAM
GRID PLOT

USE BORDER SCALE NONE

APPD DATE

No. D 674-40-10 D

4-283 S