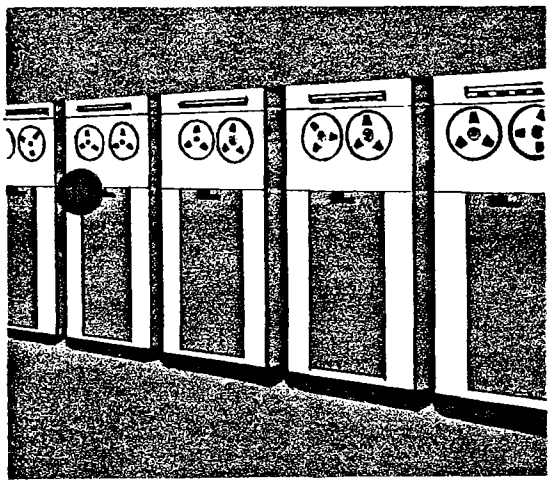

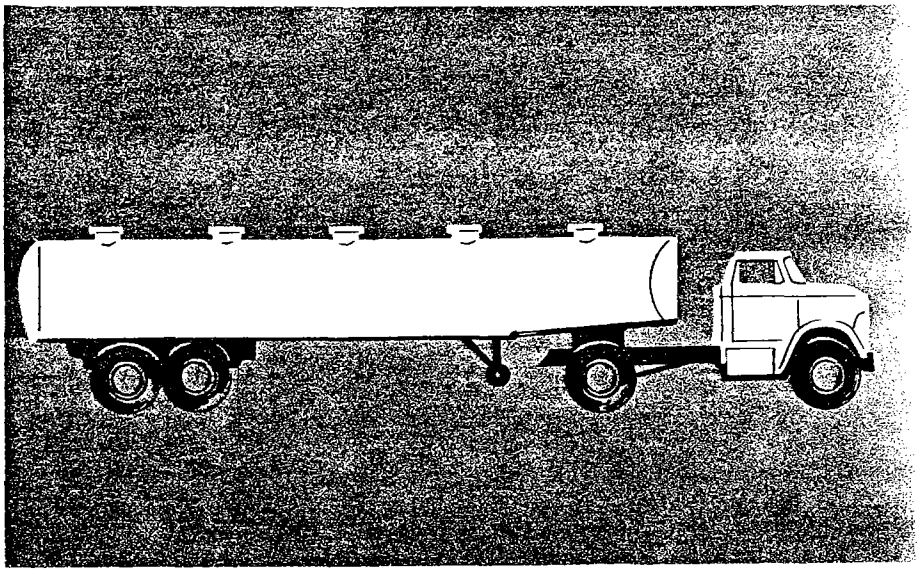

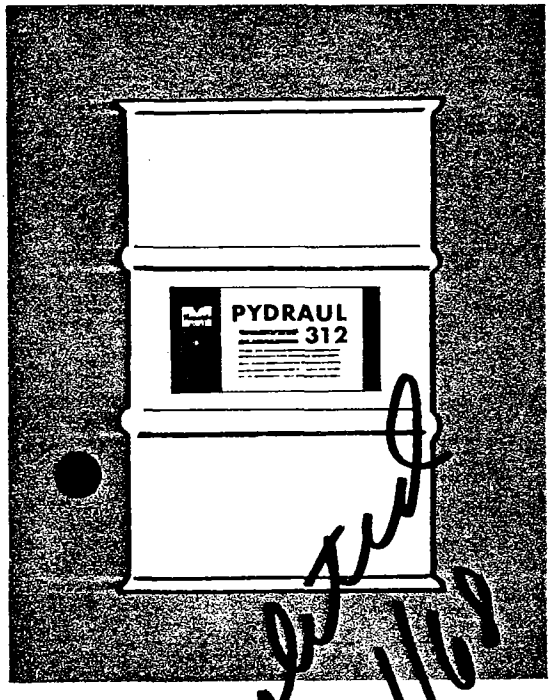

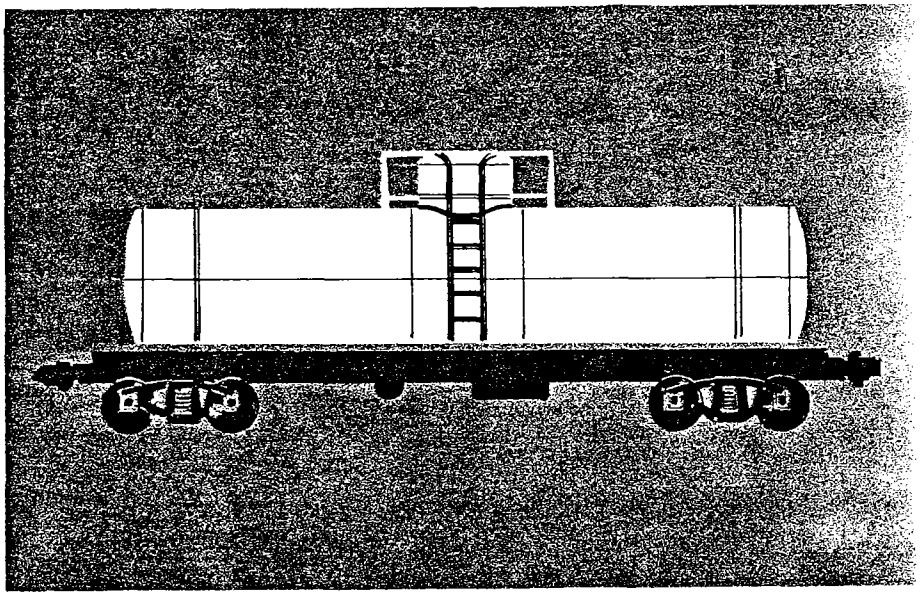

PYDRAUL® FLUIDS

PRICING AND SHIPPING INFORMATION

O/FF-5

Sample

revised 10/67

1,000 run

FUNCTIONAL FLUIDS Monsanto

DSW 337543

STLCOPCB4081453

PYDRAUL FLUIDS PRICE AND SHIPPING INFORMATION

OCTOBER 1, 1967

*54 GAL. NET DRUMS**

Product	Unit	Tank Car / Tank Truck	Carlot / Trucklot	Less Than Trucklot	5-Gal. Net Cans
PYDRAUL® 312	gal.	$1.95	$2.15	$2.35	$2.60
PYDRAUL 135	gal.	2.25	2.45	2.65	2.90
PYDRAUL® A-200	gal.	2.90	3.10	3.30	3.55
PYDRAUL® F-9	gal.	3.45	3.65	3.85	4.10
PYDRAUL® AC	gal.	3.45	3.65	3.85	4.10
PYDRAUL AC—WINTER GRADE 28	gal.	3.45	3.65	3.85	4.10
PYDRAUL® 60	gal.	4.55	4.75	4.95	5.20
PYDRAUL® 150	gal.	3.60	3.80	4.00	4.20
PYDRAUL® 625	gal.	3.45	3.65	3.85	4.10

**PYDRAUL F-9 is packed in 55 gal. net drums. All other Pydraul Fluids packed in 54 gallon net drums.*

- Add 15 cents ($0.15) per gallon on shipments to western states of Arizona, California, Idaho, Montana, Nevada, Oregon, Utah, Washington and Wyoming.
- All prices F.O.B. St. Louis, Missouri (Pydraul A-200, F.O.B. Monsanto, Illinois) with minimum freight prepaid and allowed to all points in U.S.A. (except Alaska and Hawaii) via route of seller's choice on orders of 15 gallons or more.
- Orders for less than 15 gallons, F.O.B. St. Louis, Missouri.
- Terms: 1% 10 days; Net 30 days.
- Drums are inclusive and non-returnable.

Tank Trucks: Where feasible, Tank Trucks will be supplied at Tank Car Price.

Shipping Classification: Pydraul 312, 135, A-200, F-9, 60, 150, and 625 — Hydraulic System Fluid, other than Petroleum.
Pydraul AC, Pydraul AC — Winter Grade 28 — Chemicals NOIBN

To assure you of prompt delivery, stocks are maintained in strategically located warehouses

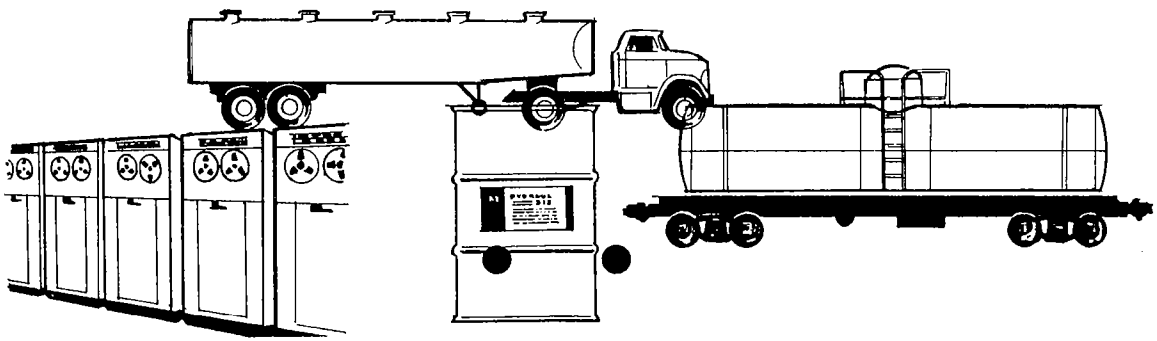

DSW 337544

STLCOPCB4081454

TO ORDER PYDRAUL FLUIDS
CONTACT YOUR NEAREST
MONSANTO DISTRICT SALES OFFICE...

ATLANTA, GEORGIA 30326
Lenox Towers West
3390 Peachtree Rd. N.E.
Tel. (404) 231-4320

BOSTON, MASSACHUSETTS 02149
Everett Station
Tel. (617) Dunkirk 7-5010

CHICAGO, ILLINOIS
3158 Des Plaines Ave.
Des Plaines, Illinois 60018
Tel. (312) 296-6688

CINCINNATI, OHIO 45206
2330 Victory Parkway
Tel. (513) 751-6707

CLEVELAND, OHIO 44122
3645 Warrensville Center Rd.
Tel. (216) 991-5400

DETROIT, MICHIGAN 48235
500 Northland Towers
Tel. (313) 357-0910

HOUSTON, TEXAS 77002
1300 Main Street
Tel. (713) Capitol 3-4011

LOS ANGELES, CALIFORNIA 90022
6670 E. Flotilla St.
Tel. (213) Raymond 3-2492

MINNEAPOLIS, MINNESOTA 55402
912 Northstar Center 110 S. Seventh St.
Tel. (612) Federal 9-4651

NEW YORK, NEW YORK 10017
277 Park Avenue
Tel. (212) 922-4111

PITTSBURGH, PENNSYLVANIA 15222
No. 4 Gateway Center Bldg. Room 1406
Tel. (412) 261-2156

ST. LOUIS, MISSOURI 63166
800 N. Lindbergh Blvd.
Tel. (314) Wydown 3-1000

SAN FRANCISCO BAY AREA
2710 Lafayette, Santa Clara, Calif. 95052
Tel. (408) 243-0414

SEATTLE, WASHINGTON 98104
911 Western Avenue
Tel. (206) Main 2-4203

SPRINGFIELD, MASSACHUSETTS 01101
730 Worcester Ave.
Tel. (413) 788-6911

WILMINGTON, DELAWARE 19803
2005 Concord Pike, Fairfax
Tel. (302) Olympia 8-6531

for further information call, wire or write:

FUNCTIONAL FLUIDS DEPT. · MONSANTO · 800 N. LINDBERGH BLVD. · ST. LOUIS, MISSOURI 63166

DSW 337545

2-2508-0967-6 LITHO IN U.S.A.

STLCOPCB4081455