TABLE 7. AMERICAN STANDARD DIMENSIONS OF TEES, CROSSES[a] (STRAIGHT SIZES), AND ELBOWS FOR CLASS 125 CAST-IRON FLANGED FITTINGS, *A.S.A.* B16a-1939

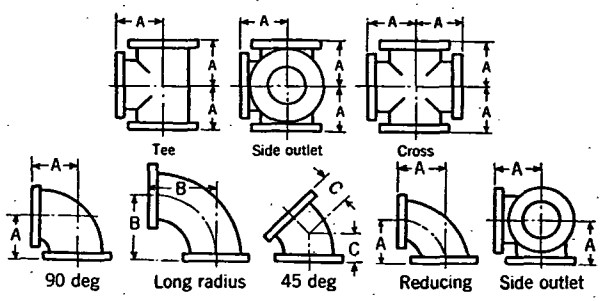

Nominal Pipe Size[b,c]	A — Center to Face Tees, Crosses[c,d] and Elbows	AA — Face to Face Tees and Crosses[c,d]	B — Center to Face Long Radius Elbow[e,f,g]	C — Center to Face 45 Deg Elbow[e]	Diameter of Flange	Thickness of Flange, Min.	Metal[h] Thickness of Body
1	3½	7	5	1¾	4¼	7/16	5/16
1¼	3¾	7½	5½	2	4⅝	½	5/16
1½	4	8	6	2¼	5	9/16	5/16
2	4½	9	6½	2½	6	5/8	5/16
2½	5	10	7	3	7	11/16	5/16
3	5½	11	7¾	3	7½	¾	⅜
3½	6	12	8½	3½	8½	13/16	7/16
4	6½	13	9	4	9	15/16	½
5	7½	15	10¼	4½	10	15/16	½
6	8	16	11½	5	11	1	9/16
8	9	18	14	5½	13½	1⅛	5/8
10	11	22	16½	6½	16	1 3/16	¾
12	12	24	19	7½	19	1¼	13/16
14 O.D.	14	28	21½	7½	21	1⅜	⅞
16 O.D.	15	30	24	8	23½	1 7/16	1
18 O.D.	16½	33	26½	8½	25	1 9/16	1 1/16
20 O.D.	18	36	29	9½	27½	1 11/16	1⅛
24 O.D.	22	44	34	11	32	1⅞	1¼
30 O.D.	25	50	41½	15	38¾	2⅛	1 7/16
36 O.D.	28	56	49	18	46	2⅜	1⅝
42 O.D.	31	62	56½	21	53	2⅝	1 13/16
48 O.D.	34	68	64	24	59½	2¾	2

All dimensions given in inches.

[a]Crosses both straight and reducing sizes 18 in. and larger shall be reinforced to compensate for the inherent weakness in the casting design.

[b]Size of all fittings listed indicates nominal inside diameter of port.

[c]Tees, side outlet tees, and crosses, 16 in. and smaller, reducing on the outlet, have the same dimensions center to face, and face to face as straight size fittings corresponding to the size of the larger opening. Sizes 18 in. and larger, reducing on the outlet, are made in two lengths, depending on the size of the outlet.

[d]Tees and crosses, reducing on run only, carry same dimensions center to face and face to face as a straight size fitting of the larger opening.

[e]Reducing elbows and side outlet elbows carry same dimensions center to face as straight size elbows corresponding to the size of the larger opening.

[f]Special degree elbows, ranging from 1 to 45 deg, inclusive, have the same center to face dimensions as given for 45-deg elbows and those over 45 deg and up to 90 deg, inclusive, shall have the same center to face dimensions as given for 90-deg elbows. The angle designation of an elbow is its deflection from straight line flow and is the angle between the flange faces.

[g]Side outlet elbows shall have all openings on intersecting center-lines.

[h]Body thickness at no point shall be less than 87½ per cent of the dimensions given in the table.

for refrigeration use, thread fits and tolerances on thread gages must be maintained within close limits. Brass fittings with *S.A.E.* dimensions are not interchangeable with the American Standard fittings for water tubes.

Ammonia pipe fittings made of cast-iron were formerly used extensively in handling refrigerants in large installations. Replacement of ammonia by other refrigerants operating at lower pressures has seriously curtailed the market for these fittings. For this reason formulation of an American Standard for these fittings was abandoned by the *A.S.A.* in 1936.

FLANGE FACINGS AND GASKETS

A number of different flange facings in common use are plain face, raised face, tongue and groove, and male and female. Cast-iron fittings for 125 psi and below are normally furnished with a plain face, while the 250 lb cast-iron fittings are supplied with a 1/16-in. raised face. The standard facing for steel flanged fittings for 150 and 300 psi is a 1/16-in. raised face although these fittings are obtainable with a variety of facings. The gasket surface of the raised face may be finished smooth or may be machined with concentric or spiral grooves often referred to as serrated face or phonograph finish, respectively.

The dimensions of elbows, tees and crosses for 125 lb cast-iron screwed fittings are given in Table 6, whereas the dimensions for 125 lb cast-iron flanged fittings are given in Table 7.

For low temperature service not to exceed about 220 F, a number of paper or vegetable fiber gasket materials will prove satisfactory; for plain raised face flanges, rubber or rubber inserted gaskets are commonly employed. Asbestos composition gaskets are probably the most widely used, particularly where the temperature exceeds 250 F. Jacketed asbestos and metallic gaskets may be used for any pressure and temperature conditions, but preferably only with a narrow recessed facing.

WELDING

Erection of piping in heating and ventilating installations by means of fusion welding has been commonly accepted in the past few years as an alternate method to the screwed and flanged joint. Since the question of economy of welding as against the use of screwed and flanged fittings is dependent on the individual job, the use of welding is generally recommended on the basis of a greatly reduced cost of maintenance and repair, of less weight resulting from the use of a lighter-weight pipe, and of increased economy in pipe insulation, hangers, and supports rather than on the basis of any economy that might be effected in actual erection by welding on low to medium pressure heating jobs.

Fusion welding, commonly used in erection of piping, is defined as the process of joining metal parts in the molten, or molten and vapor states, without the application of mechanical pressure or blows. Fusion welding embraces gas welding and electric arc welding, both of which are commonly used to produce acceptable welds. Welding processes and procedure are described in various publications[3].

Welding application requires the same basic knowledge of design as do the other types of assembly, but, in addition, requires a generous knowledge of the sciences involved, particularly as to welding qualities of metal, their reaction to extremely high temperatures, and the ability to determine and use only the best quality welding rods. This requirement applies equally to employer and employee with the employer accepting