INDEX 13ST-1

OUTLINE DRAWING **5010-1**

November, 1970

# AISE TYPE WB BRAKES

(All dimensions in inches)

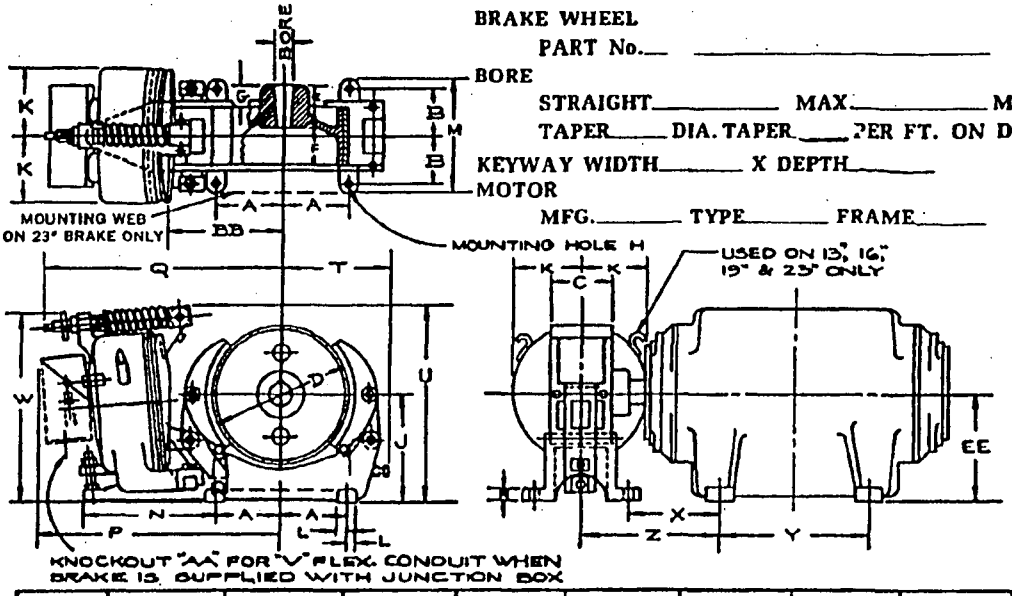


BRAKE WHEEL

PART No. _____

BORE

STRAIGHT _____ MAX _____ MIN.

TAPER _____ DIA. TAPER _____ PER FT. ON DIA.

KEYWAY WIDTH _____ X DEPTH _____

MOTOR

MFG. _____ TYPE _____ FRAME _____

| SIZE BRAKE | E | F | G | X | Y | Z | EE | |
|---|---|---|---|---|---|---|---|---|
| | | | | | | | | |

| SIZE BRAKE | A | B | C | D | H DIA. | J | K | L | M | N | P | Q | R | T | U | V | W | AA | BB |
|---|---|---|---|---|---|---|---|---|---|---|---|---|---|---|---|---|---|---|---|
| 8" | 3.25 | 2.88 | 3.25 | 8 | .69 | 7 | 4.63 | .81 | 7.38 | 11.31 | 17 | 18 | .62 | 6.38 | 13.50 | 1 | 13.50 | 1.38 | 7.13 |
| 10" | 4 | 3.13 | 3.75 | 10 | .69 | 8.38 | 5.38 | .88 | 8 | 12.25 | 19.13 | 20.13 | .88 | 7.38 | 16.38 | 1.25 | 15.13 | 1.75 | 8.50 |
| 13" | 5.75 | 4.50 | 5.75 | 13 | .81 | 9.88 | 6.63 | 1 | 11 | 14 | 24 | 25.13 | 1 | 10 | 20.13 | 1.50 | 19.19 | 2 | 11 |
| 16" | 7.50 | 5.38 | 6.75 | 16 | 1.06 | 12.13 | 7.75 | 1.13 | 13 | 15 | 26.88 | 27.50 | 1.25 | 11.50 | 22.75 | 2 | 22 | 2.50 | 12.63 |
| 19" | 9.25 | 6.50 | 8.75 | 19 | 1.06 | 13.25 | 9.25 | 1.25 | 15.50 | 17.38 | 31.75 | 32.75 | 1.63 | 13.31 | 26.50 | 2.50 | 25.50 | 3 | 15.13 |
| 23" | 11.75 | 8 | 11.25 | 23 | 1.31 | 15.88 | 10.94 | 1.50 | 19 | 19.63 | 36.13 | 38.50 | 1.63 | 17.25 | 31.63 | 3 | 30.50 | 3.63 | 18.75 |

Drive _____ Winding _____

Certified Correct on _____ H. P. _____

Purch _____ P. O. _____

User _____ U. O. _____

Square D S. O. _____ Engr _____

C. A. SCHURR, Chief Engineer

Supersedes OD 5010-3 Dated 3-70

SQUARE D COMPANY

SQD HCK00018