TYPE 544-A
MEGOHM METER

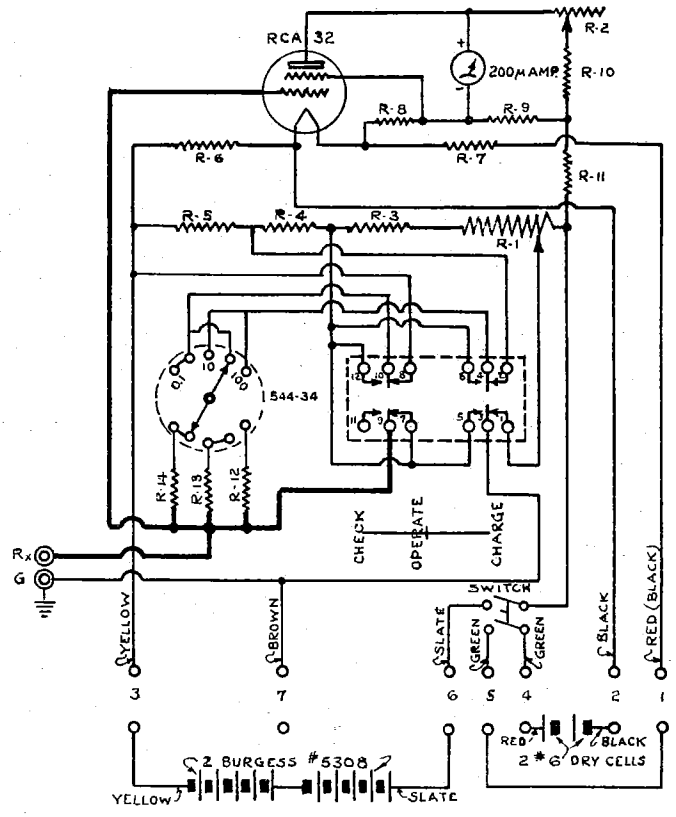

R-1 = 0-12500 Ω
R-2 = 0-30 KΩ
R-3 = 85Ω
R-4 = 100 Ω
R-5 = 900Ω
R-6 = 1178 Ω
R-7 = 20 Ω
R-8 = 2550 Ω
R-9 = 30 Ω
R-10 = 2 KΩ
R-11 = 9 KΩ
R-12 = 100 KΩ
R-13 = 1 MΩ
R-14 = 100 MΩ

MEASUREMENTS IN THE ABSENCE OF CAPACITANCE AND EXTRANEOUS POTENTIALS

1. Install batteries or power-supply unit and tubes as described in the accompanying instruction book, page 2.

2. Throw ON-OFF switch to ON and wait about two minutes for tube to heat up before beginning measurements.

3. Connect unknown resistor to R_x terminals making the "high-potential" wire as short as possible. Two or three inches is satisfactory.

4. Set control knob (CHECK-OPERATE-CHARGE) to CHECK.

5. Turn ZERO ADJUST knob until galvanometer reads zero. If the range of adjustment is insufficient, excessive d-c or a-c voltage pickup is probably present in the resistor. If the zero drifts steadily in the same direction, the presence of capacitance in the unknown resistor is indicated. In either case, refer to the procedure given in the instruction book, page 4.

6. Turn control knob to OPERATE and adjust MULTIPLIER switch and MEGOHMS dial for zero reading of galvanometer.

7. Read resistance in megohms from MEGOHMS dial and the MULTIPLIER switch.

8. For more accurate determinations recheck the galvanometer zero as in 4 and 5 above.

DSW 550989

STLCOPCB4089406

9. Rebalance the MEGOHMS dial and read the result as in 7.
10. If the MULTIPLIER is in the 100 or 1000 position, multiply result by 1.00 if an accuracy greater than 10% is desired.

FOR FURTHER INFORMATION SEE THE INSTRUCTION BOOK

STLCOPCB4089407