conoco

INTEROFFICE COMMUNICATION

To Distribution

From J. E. Cearley

Date November 22, 1988

Subject **SARA Title III Section 313 Toxic Chemical Inventory Reports and Calculations**

We have taken the data generated by PED in preparing our 1988 SARA Title III Section 313 submittals and incorporated the documents into three-ring binders. Hopefully, this will simplify the review and use of the data, particularly in the event of a SARA Title III inspection.

If you have any questions, please advise.

J. E. Cearley

J. E. Cearley

/jk

Distribution: B. D. Bridwell
P. B. Butler
B. M. Cormany
S. C. Cuthbertson
G. J. Leaman

cc: K. M. Buster

Attachment

JEC\memo2

RFP #12

SAL 000005239

LAKE CHARLES REFINERY

TABLE OF CONTENTS

I. LIST OF CHEMICALS REPORTED

II. RELEASE SUMMARY FOR REFINERY

III. CALCULATIONS

1. Calculational Methods and Assumptions
2. Sample Calculations
3. Chemical Specific Calculations
   a) Release Inventory
      i) Amount Released Per Medium
      ii) Percentage of Total Release Breakdown
   b) Waste Treatment Methods and Efficiencies
   c) Calculations

IV. APPENDICES

a) Appendix A: Reportable Toxic Chemical List Development
   i) Technical Services List of Chemicals
      API Refinery List
   ii) Rationale for Eliminating Chemicals
   iii) Threshold Calculations for Reportable Chemicals

b) Appendix B: Emission Factors
   i) SOCMI Emission Factors
   ii) AP-42 Hydrocarbon Emission Factors
   iii) Wastewater Release Table From EPA Guidance Document
   iv) EPA Land Treatment Emission Data

c) Appendix C: Blue Book Data (for Threshold Calculations)

d) Appendix D: Maximum Quantity On-Site Calculations

e) Appendix E: Chemical Composition Data
   i) Liquid Stream Composition Data and Calculations
   ii) Gas Stream Composition Data and Calculations

f) Appendix F: Solid Waste Data and Calculations
   i) Solid Waste Disposal Summary
   ii) Solid Waste Disposal Calculations and Composition Data
   iii) EPA Land Treatment Emission Data

g) Appendix G: Wastewater, API Separator, and Cooling Tower Data
   i) Flowrate Calculations
   ii) Wastewater Release Calculations and Composition Data
   iii) API Separator Release Calculations
   iv) Cooling Tower Release Calculations
   v) Wastewater Release Table from EPA Guidance Document

h) Appendix H: Storage Tank VOC Calculations and Data
   i) Storage Tank Release Summary
   ii) Equipment Inventory Survey (EIS) (Tank Capacities)
   iii) Storage Tank Release Calculations and Computer Spreadsheets

i) Appendix I: Fugitive Equipment VOC Calculations and Data
   i) Fugitive Equipment Release Summary
   ii) Fugitive Equipment Calculations
   iii) Fugitive Emission Sources In Refinery Process Units
   iv) Leaking and Non-Leaking Fugitive Emission Factors (SOCMI)
   v) Fugitive Equipment Stream Data
   vi) Process Drains Fugitive Release Summary
   vii) Process Drains Fugitive Release Calculations
   viii) Fuel Gas Fugitive Release Calculations

j) Appendix J: Loading Loss VOC Calculations
   i) Loading Loss Release Summary
   ii) Loading Loss Release Calculations and Spreadsheets

/jk
11/9/88
JEC\152

LAKE CHARLES REFINERY
1987 SARA 313 REPORT

LIST OF REPORTABLE TOXIC CHEMICALS

Aluminum Oxide
Ammonia
Benzene
Biphenyl
1,3-Butadiene
Chlorine
Cobalt
Cresol
Cumene
Cyclohexane
Ethyl Benzene
Ethylene
Hydrochloric Acid
Manganese
Methanol
Molybdenum Trioxide
Naphthalene
Nickel
Phenol
Phosphoric Acid
Propylene
Sodium Hydroxide
Sodium Sulfate
Styrene
Sulfuric Acid
Toluene
1,1,1-Trichloroethane
1,2,4-Trimethylbenzene
Xylenes

LAKE CHARLES REFINERY
1987 SARA 313 REPORT

OVERALL RELEASE SUMMARY

CHEMICAL	RELEASE, LBS/YR AIR POINT	AIR NON-PT	WATER	LAND	RAT QUANTITY ON SITE
Ammonium Nitrate	42000	NA	NA	910000(OF)	1E5-1E7
Ammonia	NA	3200	4300	NA	1E3-1E4
Benzene	1600	10000	37	0(ON)	1E6-5E7
Arsenic	1	280	37	0(ON)	1E3-1E5
1,3-Butadiene	NA	410	NA	NA	1E3-1E4
Chlorine	NA	1000	NA	NA	1E4-1E5
Cobalt	NA	11	73	39(ON) 2400(OF)	1E4-1E5
Cumene	1	38	103	0(ON)	1E4-1E5
Cyclohexane	13	2711	37	0(ON)	1E7-5E7
Cyclohexanone	2400	11000	37	0(ON)	1E6-1E7
Ethyl Benzene	182	4500	37	0(ON)	1E7-5E7
Ethylene	NA	7300	NA	NA	1E4-1E5
Hydrochloric Acid	4	460	0	NA(ON)	1E4-1E5
Manganese	7	453	<499	<499(ON)	1E4-1E5
Methanol	1200	1800	0	0(ON)	1E6-1E7
Methylene Chloride	NA	150	64	<499(ON) 35000(OF)	1E4-1E5
Naphthalene	1400	3638	37	0(ON)	1E6-1E7
Nickel	NA	33	207	110(ON) 6900(OF)	1E3-1E4
Phenol	1	610	700	0(ON)	1E5-1E6
Phosphoric Acid	NA	NA	0	0(OF)	1E4-1E5
Propylene	NA	63000	NA	NA	1E5-1E6
Sodium Hydroxide	0	0	0	NA	1E5-1E7
Sodium Sulfate	NA	NA	380000	170000(ON)	1E3-1E4
Styrene	19	2043	37	0(ON)	1E7-5E7
Sulfuric Acid	420	<499	0	NA	1E7-5E7
Toluene	1900	26000	37	0(ON)	5E7-1E8
1,1,1 Trichloroethane	NA	2500	36	0(ON)	1E4-1E7
1,2,4-Trimethylbenzene	30	4700	<499	0(ON)	1E7-5E7
Xylenes	840	23000	37	0(ON)	5E7-1E8

NA = release is not applicable
ON = land release is on-site
OF = land release is off-site

NOTE: Loading rose emissions were inadvertently reported as point releases; loading losses should be considered non-point releases in future reports.

SAL 000005243

1987 SARA 313 REPORT
RELEASE INVENTORY
LAKE CHARLES REFINERY

CUMENE

SOURCE	AMOUNT RELEASED (lb/yr)	% OF TOTAL RELEASE TO MEDIUM
AIR POINT RELEASE		
Storage Tanks		
Floating Roof	12.	0
Fixed Roof	0.	0
Total Point Release	12. (<499)	0
AIR NON-POINT RELEASES		
Loading Loss	15.	1
Fugitive Equipment Loss		
No. 3 CRU & HDS	134.	5
Regular Coker	10.	0
Premium Coker	34.	1
No. 2 Coker	62.	2
Gas Recovery Plant	386.	14
FCC	144.	5
No. 2 CRU & HDS	252.	10
Thermal Cracker	32.	1
Tank Farm/Blending	1240.	46
Process Drains	18.	1
Separators		
API	2.	0
DAF	1.	0
IAF	1.	0
Cooling Tower	102.	4
Wastewater Release to Air	278.	10
Waste Release to Air	0.	0
Total Non-point Release	2711. (2400)	100
TOTAL AIR RELEASE	2723.	100
WATER RELEASE	37. (<499)	
LAND RELEASE		
On-Site (Landfarm)	0.	
Off-Site (Landfill)	N/A	
TOTAL LAND RELEASE	0.	

SAL 000005244

1987 SARA 313 REPORT
WASTE TREATMENT METHODS AND EFFICIENCY
LAKE CHARLES REFINERY

CUMENE

GENERAL WASTESTREAM	TREATMENT METHOD	TREATMENT EFFICIENCY	RANGE OF INFLUENT CONCENTRATION
GASEOUS	VAPOR RECOVERY UNIT	98%(a)	0.01-1%(a)
WASTEWATER	BIOLOGICAL TREATMENT (AEROBIC)	95%(b)	1 ppb-1 ppm(c)
SOLID WASTE	BIOLOGICAL TREATMENT (AEROBIC)	100%(d)	1-100 ppm(e)

(a) Based on data provided by Brandt Butler.

(b) See Table A-2 in Wastewater Appendix.

(c) Chemical was not detected, so one-half the detection limit (D.L. = 10ppb) was assd (Based on 1977 R&D Lake Charles Wastewater Analysis, Tecnical Memorandum No. 603-79-350-2, and EPA Guidance Document).

(d) Assumption based on data for similar organic compounds (see "Estimating Land Treatment Air Emissions" in Solid Waste Data Appendix).

(e) Based on Ponca City Solid Waste Composition Data.

LAKE CHARLES

CUMENE COMPOSITIONS

	WT. %
Gasolines – Unleaded, Regular, Super Unleaded, Base, FCC Gasoline, Reformate, Slop, Coker	1.0
Crude Condensate	1.0
Remaining Streams	< 1.0

VP = .0619 PSIA @ 70°F

SEE APPENDIX E FOR COMPOSITION BACKGROUND INFO.

Conoco Inc.
Calculation Sheet

Made By
Checked By
Date
Page of

Title

Job No.
Field
State

SAL 000005246

CUMENE CALCULATIONS
(METHYL ETHYL BENZENE)

STORAGE TANKS

FLOATING ROOF = $[1.7 + 28.2 + 32.1](0.01)\left(\frac{0.0619}{6.2}\right)(2000) = \underline{12\ LB/YR}$

LOADING LOSS = $[10.62 + 42.73 + 19.55](0.01)\left(\frac{0.0619}{6.2}\right)(2000) = \underline{15\ LB/YR}$

FUGITIVE EQUIPMENT LOSSES — SEE APPENDIX I

PROCESS DRAINS = $286.9\left(\frac{0.17}{100}\right) \times \frac{0.0619}{3.4} = .0089\ TPY = \underline{18\ LB/YR}$

API SEPARATOR: $39.42\left(\frac{0.17}{100}\right)\left(\frac{0.0619}{3.4}\right)(2000) = \underline{2.4\ LB/YR}$

COOLING TOWER : $29.9\ TPY\left(\frac{0.17}{100}\right)(2000) = \underline{102\ LB/YR}$

WASTEWATER :

EFFLUENT = $7.31 \times 10^9\ LB/YR \times \frac{5\ LB}{10^9\ LB} = \underline{37\ LB/YR}$

TO AIR = $\frac{36.6\ LB/YR}{.05} \times .38 = \underline{278\ LB/YR}$

WASTE RELEASES :

NO DATA AVAILABLE ON CUMENE, ASSUMED SOME IS POTENTIALLY PRESENT AT SMALL CONCENTRATIONS. QUANTITY TO LANDFARM IS DEGRADED. LOSSES TO AIR ARE ASSUMED NEGLIGIBLE (WW NUMBER PROBABLY COVERS THIS).

NOTE: SEE APPENDICES FOR DETAILS ON CALCULATIONS.

1987 SARA 313 REPORT
RELEASE INVENTORY
LAKE CHARLES REFINERY

CYCLOHEXANE

SOURCE	AMOUNT RELEASED (lb/yr)		% OF TOTAL RELEASE TO MEDIUM
AIR POINT RELEASES			
Storage Tanks			
Floating Roof	130.		1
Fixed Roof	2249.		16
Total Point Release	2379.	(2400)	17
AIR NON-POINT RELEASES			
Loading Loss	0.		0
Fugitive Equipment Loss			
No. 3 CTU	500.		4
No. 4 HDS	362.		3
No. 3 CRU & HDS	268.		2
Regular Coker	20.		0
Premium Coker	104.		1
No. 2 Coker	380.		3
Gas Recovery Plant	386.		3
No. 6 HDS	194.		1
No. 2 Crude Unit	458.		3
FCC	144.		1
Lt Gaso Spltr	846.		6
No. 1 HDS	116.		1
No. 2 CRU & HDS	1812.		13
Thermal Cracker	32.		0
PGU	1166.		8
Tank Farm/Blending	1820.		13
Process Drains	2052.		15
Separators			
API	282.		2
DAF	37.		0
IAF	16.		0
Cooling Tower	460.		3
Wastewater Release to Air	73.		1
Waste Release to Air	0.		0
Total Non-point Release	11530.	(11000)	83
TOTAL AIR RELEASE	13909.		100
WATER RELEASE	37.	(<499)	
LAND RELEASE			
On-Site (Landfarm)	0.		
Off-Site (Landfill)	N/A		
TOTAL LAND RELEASE	0.		

SAL 000005248

1987 SARA 313 REPORT
WASTE TREATMENT METHODS AND EFFICIENCY
LAKE CHARLES REFINERY

CYCLOHEXANE

GENERAL WASTESTREAM	TREATMENT METHOD	TREATMENT EFFICIENCY	RANGE OF INFLUENT CONCENTRATION
GASEOUS	VAPOR RECOVERY UNIT	98%(a)	0.01-1%(a)
WASTEWATER	BIOLOGICAL TREATMENT (AEROBIC)	95%(b)	1 ppb-1 ppm(c)
SOLID WASTE	BIOLOGICAL TREATMENT (AEROBIC)	100%(d)	1-100 ppm(e)

(a) Based on data provided by Brandt Butler.

(b) See Table A-2 in Wastewater Appendix.

(c) Chemical was not detected, so one-half the detection limit (D.L.= 10 ppb) was assumed (based on 1977 R&D Lake Charles wastewater analysis, Technical Memorandum No. 603-79-350-2 & EPA Guidance Document).

(d) Assumption based on data for similar organic compounds (see "Estimating Land Treatment Air Emissions" in Solid Waste Data Appendix).

(e) Based on Ponca City Solid Waste Composition Data.

CYCLOHEXANE COMPOSITIONS

	Wt %
Gasoline — Regular, Unleaded, Super Unleaded	<1.0
FCC Gasoline	1.0
LSR Gasoline	5.2
Reformate, Crude Wet Gas, Alkylate	< 1.0
Naphtha	2.0
Crude	< 1.0
JP-4	1.4
Coker Gas	1.0

SEE APPENDIX E FOR COMPOSITION BACKGROUND INFORMATION

Conoco Inc.
Calculation Sheet

ade By
Checked By
Date
Page of
Title
Job No.
Field
State

SAL 000005250

CYCLOHEXANE CALCULATIONS

STORAGE TANKS:

FLOATING ROOF = $(28.2\ TPY)\left(\frac{0.9}{100}\right)\left(\frac{1.6}{6.2}\right) = 0.065\ TPY = \underline{130\ LB/YR}$

FIXED ROOF = $(56.22\ TPY)\left(\frac{2.0}{100}\right)\left(\frac{1.6}{1.6}\right) = 1.124\ TPY = \underline{2249\ LB/YR}$

LOADING LOSS = 0 (NONE IN GASOLINE PRODUCT)

FUGITIVE EQUIPMENT LOSSES – SEE APPENDIX I

PROCESS DRAINS = $(286.9\ TPY)\left(\frac{0.76}{100}\right)\left(\frac{1.6}{3.4}\right) = 1.026\ TPY = \underline{2052\ LB/YR}$

API SEPARATOR = $(39.42\ TPY)\left(\frac{0.76}{100}\right)\left(\frac{1.6}{3.4}\right)(2000) = \underline{282\ LB/YR}$

COOLING TOWER = $(29.9\ TPY)\left(\frac{0.76}{100}\right) = 0.23\ TPY = \underline{460\ LB/YR}$

WASTE WATER:

EFFLUENT = $7.31 \times 10^9\ LB/YR \times \frac{5\ LB}{10^7\ LB} = \underline{37\ LB/YR}$ (½ D.L. FOR OTHERS)

TO AIR = $\frac{36.6\ LB/YR}{.05} \times .10 = \underline{73\ LB/YR}$

WASTE RELEASE:

NO DATA AVAILABLE FOR CYCLOHEXANE IN WASTE, BUT IT IS POTENTIALLY PRESENT AT LOW CONCENTRATIONS. QUANTITY RELEASED TO LANDFARM IS DEGRADED; LOSSES TO AIR ARE NEGLIGIBLE.

NOTE: SEE APPENDICES FOR CALCULATION DETAILS.

1987 SARA 313 REPORT
RELEASE INVENTORY
LAKE CHARLES REFINERY

ETHYL BENZENE

SOURCE	AMOUNT RELEASED (lb/yr)	% OF TOTAL RELEASE TO MEDIUM
AIR POINT RELEASES		
Storage Tanks		
Floating Roof	55.	1
Fixed Roof	127.	3
Total Point Release	182. (<499)	4
AIR NON-POINT RELEASES		
Loading Loss	92.	2
Fugitive Equipment Loss		
No. 3 CTU	70.	1
No. 4 HDS	30.	0
No. 3 CRU & HDS	468.	10
Regular Coker	10.	0
Premium Coker	34.	1
No. 2 Crude Unit	70.	1
FCC	174.	4
LK Gaso Spltr	40.	1
No. 1 HDS	58.	1
No. 2 CRU & HDS	882.	19
Tank Farm/Blending	2100.	45
Process Drains	88.	2
Separators		
API	12.	0
DAF	4.	0
IAF	2.	0
Cooling Tower	174.	4
Wastewater Release to Air	176.	4
Waste Release to Air	36.	1
Total Non-point Release	4520. (4500)	96
TOTAL AIR RELEASE	4702.	100
WATER RELEASE	37. (<499)	
LAND RELEASE		
On-Site (Landfarm)	0.	
Off-Site (Landfill)	N/A	
TOTAL LAND RELEASE	0.	

SAL 000005252

1987 SARA 313 REPORT
WASTE TREATMENT METHODS AND EFFICIENCY
LAKE CHARLES REFINERY

ETHYL BENZENE

GENERAL WASTESTREAM	TREATMENT METHOD	TREATMENT EFFICIENCY	RANGE OF INFLUENT CONCENTRATION
GASEOUS	VAPOR RECOVERY UNIT	98%(a)	0.01-1%(a)
WASTEWATER	BIOLOGICAL TREATMENT (AEROBIC)	95%(b)	1 ppb-1 ppm(c)
SOLID WASTE	BIOLOGICAL TREATMENT (AEROBIC)	100%(d)	1-100 ppm(e)

(a) Based on data provided by Brandt Butler.

(b) See Table A-2 in Wastewater Appendix.

(c) Chemical was not detected, so one-half the detection limit (D.L.= 10 ppb) was assumed (based on 1977 R&D Lake Charles wastewater analysis, Technical Memorandum No. 603-79-350-2 & EPA Guidance Document).

(d) See "Estimating Land Treatment Air Emissions" in Solid Waste Data Appendix.

(e) See Waste Composition Data in Solid Waste Data Appendix.

ETHYL BENZENE COMPOSITIONS

	Wt %
Gasoline - Regular, Unleaded, Super Unleaded	1.7
FCC Gasoline	1.2
Reformate	2.5
Napintha	1.0
LSR Gasoline, Crude Wet Gas, Alkylate, Crude, JP-4, Coker Gas	<1.0

SEE APPENDIX E FOR COMPOSITION BACKGROUND INFORMATION.

ETHYL BENZENE CALCULATIONS

STORAGE TANKS

FLOATING ROOF = $\left[(32.1\ TPY)\left(\frac{1.7}{100}\right) + (1.7\ TPY)\left(\frac{1.7}{100}\right) + (28.2\ TPY)\left(\frac{1.3}{100}\right)\right]\left(\frac{0.18}{6.2}\right)(2$
= 55 LB/YR

FIXED ROOF = $(56.22\ TPY)\left(\frac{1.0}{100}\right)\left(\frac{0.18}{1.6}\right)(2000)$ = 127 LB/YR

LOADING LOSS = $\left[(10.62\ TPY)\left(\frac{1.7}{100}\right) + (42.73\ TPY)\left(\frac{2.5}{100}\right) + (19.55\ TPY)\left(\frac{1.7}{100}\right)\right]$
$\times \frac{0.18}{6.2} \times 2000$ = 92 LB/YR

EQUIPMENT FUGITIVES - (SEE APPENDIX I)

PROCESS DRAINS = $(286.9\ TPY)\left(\frac{0.29}{100}\right)\left(\frac{0.18}{3.4}\right)(2000)$ = 88 LB/YR

API SEPARATOR = $(39.42\ TPY)\left(\frac{0.29}{100}\right)\left(\frac{0.18}{3.4}\right)(2000)$ = 12 LB/YR

COOLING TOWER = $(29.9\ TPY)\left(\frac{0.29}{100}\right)(2000)$ = 174 LB/YR

WASTE WATER:

EFFLUENT: $7.31 \times 10^9\ \frac{LB}{YR} \times \frac{5^{*}\ LB}{10^9\ LB}$ = 37 LB/YR (½ D.L.)

TO AIR: $\frac{36.6\ LB/YR}{.05} \times 0.24$ = 176 LB/YR

WASTE RELEASE:

TOTAL TO LANDFARM = $\left(14{,}650\ TPY \times \frac{0.374}{10^6} + 1112^{TPY} \times \frac{43}{10^6}\right)(2000)$ = 106.6 LB/Y

RELEASE TO AIR = $(106.6\ LB/YR)(0.333)$ = 36 LB/YR

RELEASE TO LAND = 0 (100% Degraded)

NOTE: FOR MORE DETAIL ON CALCULATIONS, SEE APPENDICES.

1987 SARA 313 REPORT
RELEASE INVENTORY
LAKE CHARLES REFINERY

ETHYLENE

SOURCE	AMOUNT RELEASED (lb/yr)	% OF TOTAL RELEASE TO MEDIUM
AIR POINT RELEASE	N/A	N/A
AIR NON-POINT RELEASE		
Fugitive Equipment Loss		
Regular Coker	10.	0
Premium Coker	34.	0
No. 2 Coker	62.	1
Gas Recovery Plant	129.	2
FCC	2320.	30
Cryo	4220.	54
Thermal Cracker	32.	0
Acid Plant	188.	3
Fuel Gas Fugitives	760.	10
Wastewater Release to Air	0.	0
Waste Release to Air	0.	0
Total Non-point Release	7755. (7800)	100
TOTAL AIR RELEASE	7755.	100
WATER RELEASE	N/A	N/A
LAND RELEASE	N/A	N/A

ETHYLENE CALCULATIONS

POINT EMISSION = N/A (GASEOUS COMPOUND)

FUGITIVE EQUIPMENT LOSSES, FUEL GAS FUGITIVES - (SEE APPENDIX I)

NONE TO WW; LAND - GAS = N/A

1987 SARA 313 REPORT
RELEASE INVENTORY
LAKE CHARLES REFINERY

HYDROCHLORIC ACID

SOURCE	AMOUNT RELEASED (lb/yr)	% OF TOTAL RELEASE TO MEDIUM
AIR POINT RELEASE		
Storage Tanks	4.	1
Total Point Release	4. (<499)	1
AIR NON-POINT RELEASE		
Demineralizer Resin Regen.	460.	99
Total Non-point Release	460. (<499)	99
TOTAL AIR RELEASE	464.	100
WATER RELEASE	0.	
LAND RELEASE	N/A	

SAL 000005258

1987 SARA 313 REPORT
WASTE TREATMENT METHODS AND EFFICIENCY
LAKE CHARLES REFINERY

HYDROCHLORIC ACID

GENERAL WASTESTREAM	TREATMENT METHOD	TREATMENT EFFICIENCY	RANGE OF INFLUENT CONCENTRATION
WASTEWATER	NEUTRALIZATION	100%(a)	>1%(a)

(a) Based on data provided by Brandt Butler.

HYDROCHLORIC ACID

LAKE CHARLES

AIR

VP = 10.6 mm Hg @ 20°C (30% Acid) = 0.21 PSI (1)
VP_{H_2O} (over HCl) = 5.41 mm Hg = 0.10 PSI

AIR POINT RELEASE = STORAGE RELEASE
= 22 LB (2) × .3 × $\frac{.21}{.31}$ = 4.5 LB

AIR NON-POINT RELEASE = [1(.11) + 4(.016)] × 24 × 365 × .3 (Acid Conc.)
(FUGITIVE RELEASE, 1 PUMP, 4 VALVES) = 460 LB/YR

BASIS = ENGINEERING JUDGEMENT / CALCULATION

WATER

WATER RELEASE = 0 (3)

BASIS = pH MONITORING

TREATMENT: NEUTRALIZATION, 100% EFFICIENT, INFLUENT CONCENTRATION: >1%

LAND

LAND RELEASE = N/A

NOTES: (1)
(2) SEE ATTACHED HANDOUT.
(3) PER BRANDT BUTLER (6-27-88 PHONE CONVERSATION)

```
VOC EMISSION CALCULATIONS
FIXED ROOF

DATE                                  =          19-May-88
TIME PERIOD : MONTH,YR START          =             Jan 87
            : MONTH,YR END            =             dec 87
LOCATION                              =       lake charles
POINT SOURCE I.D. #                   =           HCl tank
MATERIAL STORED                       =            70% HCl
TANK CAPACITY (bbls)                  =                238
THRUPUT (bbls/yr)                     =              10000

BREATHING LOSS
--------------

TANK DIAMETER (ft)                D =                 11
TANK HEIGHT (ft)                  H =                 15
[ALT] A   VAPOR SPACE HEIGHT (ft) h =                7.5
```

19-May-88 02:16 AM


```
BREATHING LOSS
--------------

TANK DIAMETER (ft)                D =                 11
TANK HEIGHT (ft)                  H =                 15
[ALT] A   VAPOR SPACE HEIGHT (ft) h =                7.5
[ALT] B   DAILY TEMP CHANGE (F)  dT =                 20
[ALT] C   MOLECULAR WEIGHT       Mv =                 30
[ALT] D   VAPOR PRESSURE (psia)  Pv =               0.31
[ALT] E   PRESSURE (psia)        Pa =               14.7
[ALT] F   PRODUCT FACTOR         Kc =                  1
[ALT] G   PAINT FACTOR           Fp =                  1
[ALT] H   SMALL TANK FACTOR       C =               0.56

BREATHING LOSS (lbs)             Lb =                 22


WORKING LOSS
------------
```

19-May-88 02:16 AM


```
WORKING LOSS
------------
```

1987 SARA 313 REPORT
RELEASE INVENTORY
LAKE CHARLES REFINERY

MANGANESE

SOURCE	AMOUNT RELEASED (lb/yr)	% OF TOTAL RELEASE TO MEDIUM
AIR POINT RELEASE		
Storage Tanks	7.	2
Total Point Release	7. (<499)	2
AIR NON-POINT RELEASE		
Loading Loss	0.	0
Leaded Gasoline Blending	453.	98
Total Non-point Release	453. (<499)	98
TOTAL AIR RELEASE	460.	100
WATER RELEASE	<499.	
LAND RELEASE		
On-Site (Landfarm)	<499.	
Off-Site (Landfill)	N/A	
TOTAL LAND RELEASE	<499.	

SAL 000005262

MANGANESE

LAKE CHARLES

AIR

POINT RELEASE:

STORAGE TANK LOSS = 28 LB MMT (SEE ATTACHED PRINT OUT)

$$28 \times \frac{54.9 \ \frac{LB\ MN}{LB\ MOL}}{217 \ \frac{LB\ MMT}{LB\ MOL}} = 7 \text{ LB Mn.}$$

NON-POINT RELEASE:

FUGITIVE EMISSIONS: 1 PUMP, 10 VALVES, 30 FLANGES

$$[1(.11) + 10(.016) + 30(.0018)] \times 24 \times 365 \times .63 = 1789 \text{ LB MMT}$$

$$1789 \text{ LB MMT} \times \frac{54.94 \text{ LB MN}}{217 \text{ LB MMT}} = 453 \text{ LB Mn.}$$

BASIS: ENGINEERING CALCULATIONS

WATER

$$= 0.32 \text{ ppm}^{(1)} \times 7.31 \times 10^{9} \text{ LB/YR} = 2339 \text{ LB Mn/YR}$$

BUT ACCORDING TO JIM ROSENON, INFLUENT WATER (TO PLANT) CAN CONTAIN UP TO 1 PPM. THEREFORE, REFINERY OPERATIONS MAY NOT BE RESPONSIBLE FOR ANY OF THE MN IN THE EFFLUENT. HOWEVER, SINCE THE POTENTIAL EXISTS, REPORTED <499.

BASIS: ENGINEERING CALCULATIONS / JUDGEMENT

LAND –

NO DATA ON MN CONCENTRATIONS IN WASTE. HOWEVER, SINCE SOME IS PRECIPITATED IN THE LAGOONS ACCORDING TO R&D ANALYSIS (~.33 IN, ~.30 OUT), REPORTED <499 TO LANDFARM.

BASIS: ENGINEERING CALCULATIONS / JUDGEMENT

(1) SEE WW APPENDIX REPORT FROM R&D.

D1: PR [W20] READY

	A	B	C	D
1				
2			VOC EMISSION CALCULATIONS	
3			FIXED ROOF	
4				
5				
6		DATE	=	16-Jun-88
7		TIME PERIOD : MONTH,YR START	=	JAN,1987
8		: MONTH,YR END	=	DEC,1987
9		LOCATION	=	LAKE CHARLES
10		POINT SOURCE I.D. #	=	STG TANK
11		MATERIAL STORED	=	MMT
12		TANK CAPACITY (bbls)	=	90
13		THRUPUT (bbls/yr)	=	88500
14				
15			BREATHING LOSS	
16			---	
17				
18		TANK DIAMETER (ft)	D =	8
19		TANK HEIGHT (ft)	H =	10
20	[ALT] A	VAPOR SPACE HEIGHT (ft)	h =	5

16-Jun-88 01:23 PM CAPS

D21: U [W20] 20 READY

	A	B	C	D
21	[ALT] B	DAILY TEMP CHANGE (F)	dT =	20
22	[ALT] C	MOLECULAR WEIGHT	Mv =	92
23	[ALT] D	VAPOR PRESSURE (psia)	Pv =	0.4
24	[ALT] E	PRESSURE (psia)	Pa =	14.7
25	[ALT] F	PRODUCT FACTOR	Kc =	1
26	[ALT] G	PAINT FACTOR	Fp =	1
27	[ALT] H	SMALL TANK FACTOR	C =	0.42
28				
29		BREATHING LOSS (lbs)	Lb =	28
30				
31				
32			WORKING LOSS	
33			---	
34				
35		MOLECULAR WEIGHT	Mv =	92
36		VAPOR PRESSURE	Pv =	0.4
37		# OF TURNOVERS PER YEAR	N =	983.33333333
38		TANK CAPACITY (gal)	V =	3780
39	[ALT] I	TURNOVER FACTOR	Kn =	
40		PRODUCT FACTOR	Kc =	1

16-Jun-88 01:23 PM CAPS

D41: (F0) PR [W20] READY

	A	B	C	D
41				
42		WORKING LOSS (lbs)	Lw =	0
43				
44				
45		TOTAL LOSS (lb/yr)		

SAL 000005264

1987 SARA 313 REPORT
RELEASE INVENTORY
LAKE CHARLES REFINERY

METHANOL

SOURCE	AMOUNT RELEASED (lb/yr)	% OF TOTAL RELEASE TO MEDIUM
AIR POINT RELEASES		
Storage Tanks	1200.	41
Total Point Release	1200.	41
AIR NON-POINT RELEASES		
Fugitive Equipment Loss		
Cryo Refrig	330.	11
Fuel Oil Blending	1400.	48
Total Non-point Release	1730. (1800)	59
TOTAL AIR RELEASE	2930.	100
WATER RELEASE	0.	
LAND RELEASE		
On-Site (Landfarm)	0.	
Off-Site (Landfill)	N/A	
TOTAL LAND RELEASE	0.	

1987 SARA 313 REPORT
WASTE TREATMENT METHODS AND EFFICIENCY
LAKE CHARLES REFINERY

METHANOL

GENERAL WASTESTREAM	TREATMENT METHOD	TREATMENT EFFICIENCY	RANGE OF INFLUENT CONCENTRATION
WASTEWATER	BIOLOGICAL TREATMENT (AEROBIC)	100%(a)	1 ppb-1 ppm(b)
SOLID WASTE	BIOLOGICAL TREATMENT (AEROBIC)	100%(c)	1-100 ppm(d)

(a) See Table A-2 in Wastewater Appendix.

(b) Chemical was not detected, so one-half the detection limit (D.L.= 10 ppb) was assumed (based on 1977 R&D Lake Charles wastewater analysis, Technical Memorandum No. 603-79-350-2, and EPA Guidance Document).

(c) Assumption based on data for similar organic compounds (see "Estimating Land Treatment Air Emissions" in Solid Waste Data Appendix).

(d) Based on Ponca City Solid Waste Composition Data.

SAL 000005266

METHANOL

LAKE CHARLES

AIR

BP = 64.96 °C ; VP = 100.00 mm Hg

POINT RELEASE = STORAGE LOSS = 0.6 TPY × 2000
= 1200 LB/YR

NON-POINT RELEASE:

FUGITIVES: 2 INJECTION SPOTS IN CRYO
1 PROPANE BLENDING INJECTION
1 A023 INJECTION POINT

ADDITIVE SYSTEMS: 1 PUMP (FROM BBLS)

[0.11] × 24 × 365 = 964 LB
964 LB × 2 = 1928 LB × 1.5 = 2900 LB.
↑ A023 (50%)

CRYOS = 10% OF AMT USED (SJ ESTIMATE)
REMAINDER TO SEWER (100% DEGRADATION)

AMT USED = 3300 LB ⇒ CRYOS = 330 LB

TOTAL FUGITIVE LOSS = 1800 LB

BASIS = ENGINEERING JUDGEMENT / CALCULATION

WATER

WATER RELEASE = 0 (100% Degraded Per Guidance Doc.)
BASIS = ENGINEERING JUDGEMENT
TREATMENT: BIOLOGICAL (AEROBIC), 100% EFFICIENT,
INFLUENT CONCENTRATION = 1 PPB - 1 PPM.

LAND

LAND RELEASE = 0 (LAND TREATMENT)
BASIS = ENGINEERING JUDGEMENT
TREATMENT = BIOLOGICAL (AEROBIC), 100% EFFICIENT, INFLUENT = 1-100 A

1987 SARA 313 REPORT
RELEASE INVENTORY
LAKE CHARLES REFINERY

MOLYBDENUM TRIOXIDE

SOURCE	AMOUNT RELEASED (lb/yr)
AIR POINT RELEASE	N/A
AIR NON-POINT RELEASE	
Loading Loss	0.
HDS Catalyst Hdlg	150.
Total Non-point Release	150. (<499)
TOTAL AIR RELEASE	150.
WATER RELEASE	64. (<499)
LAND RELEASE	
On-Site (Landfarm)	<499.
Off-Site (Landfill)	35000.
TOTAL LAND RELEASE	35000.

SAL 000005268

MOLYBDENUM TRIOXIDE

LAKE CHARLES

AIR

POINT RELEASE = N/A

NON-POINT RELEASE = WET DUMP RELEASE

$= \frac{100\,lb}{Dump} \times 8 \times \frac{12}{9} \times .14 = 150$ LB

Assumed Loss (1) — # HDS Units — 9 month avg (1) — % MoO_x (2)

BASIS: ENGINEERING CALCULATION

WATER

WATER RELEASE = 1% OF AMOUNT REMOVED

= 0.01 (157 TON) = 1.6 TONS

= 3200 LB × .02 = 64 LB MAX

Up to 2% Solubilized

BASIS = ENGINEERING CALCULATION

LAND

LAND RELEASE: 116 TONS × 0.15 = 35,000 LB
(OFF-SITE, LANDFILL)

ON-SITE, LANDFARM RELEASE = < 499 LB
(ONLY VERY SMALL AMOUNT FROM WW SLUDGE)

BASIS = ENGINEERING JUDGEMENT

NOTES: (1) BASED ON PONCA CITY ESTIMATES (PER STEVE JONES).
(2) COMPOSITION FROM LLOYD WINGER PHONE CONVERSATION.

1987 SARA 313 REPORT
RELEASE INVENTORY
LAKE CHARLES REFINERY

NAPHTHALENE

SOURCE	AMOUNT RELEASED (lb/yr)		% OF TOTAL RELEASE TO MEDIUM
AIR POINT RELEASES			
Storage Tanks			
Floating Roof	0.		0
Fixed Roof	1376.		28
Total Point Release	1376.	(1400)	28
AIR NON-POINT RELEASES			
Loading Loss	10.		0
Fugitive Equipment Loss			
No. 3 CTU	416.		8
No. 4 HDS	176.		4
No. 6 HDS	224.		4
FCC Feed Prep	56.		1
No. 1 HDS	176.		4
Tank Farm/Blending	2480.		49
Process Drains	0.		0
Cooling Tower	6.		0
Wastewater Release to Air	0.		0
Waste Release to Air	94.		2
Total Non-point Release	3638.	(5700) (*)	72
TOTAL AIR RELEASE	5014.		100
WATER RELEASE	37.	(<499)	
LAND RELEASE			
On-Site (Landfarm)	0.		
Off-Site (Landfill)	N/A		
TOTAL LAND RELEASE	0.		

SAL 000005270

1987 SARA 313 REPORT
WASTE TREATMENT METHODS AND EFFICIENCY
LAKE CHARLES REFINERY

NAPHTHALENE

GENERAL WASTESTREAM	TREATMENT METHOD	TREATMENT EFFICIENCY	RANGE OF INFLUENT CONCENTRATION
GASEOUS	VAPOR RECOVERY UNIT	98%(a)	0.01-1%(a)
WASTEWATER	BIOLOGICAL TREATMENT (AEROBIC)	95%(b)	1 ppb-1 ppm(c)
SOLID WASTE	BIOLOGICAL TREATMENT (AEROBIC)	100%(d)	1-100 ppm(e)

(a) Based on data provided by Brandt Butler.

(b) See Table A-2 in Wastewater Appendix.

(c) Chemical was not detected, so one-half the detection limit (D.L.= 10 ppb) was assumed (based on 1977 R&D Lake Charles wastewater analysis, Technical Memorandum No. 603-79-350-2, and EPA Guidance Document).

(d) See "Estimating Land Treatment Air Emissions" in Solid Waste Data Appendix.

(e) See Waste Composition Data in Solid Waste Data Appendix

NAPHTHALENE COMPOSITIONS

	WT%
JET 50	3.0
DIESEL	3.0
KEROSENE	3.0
CONDENSATE	1.0
HEAVY FCC GASOLINE	1.0
ALL OTHER STREAMS	< 1.0

SEE APPENDIX E FOR COMPOSITION INFO.

NAPHTHALENE CALCULATIONS

STORAGE TANKS

FIXED ROOF $= \left[(2.05\ \text{TPY})(.03)\left(\frac{.0045}{.011}\right) + (44.17)(.03)\left(\frac{.0045}{.009}\right) \right](2000)$ (KERO. / DIES.)

$= \underline{1376.\ \text{LB/YR}}$

LOADING LOSS

KEROSENE $= (20 + 6)(.03)\left(\frac{.0045}{.011}\right) = 0.3\ \text{lb/yr}$

DIESEL $= (432 + 202)(.03)\left(\frac{.0045}{.009}\right) = 9.5\ \text{lb/yr}$

$9.8\ \text{lb/yr} = \underline{10.0\ \text{lb/yr}}$

FUGITIVE EQPMT LOSS = SEE APPENDIX I

COOLING TOWER $= (29.9\ \text{TPY})(.0001)(2000) = \underline{6\ \text{lb/yr}}$

WASTE WATER:

EFFLUENT $= 7.31 \times 10^9\ \text{LB/YR} \times \frac{5\ \text{LB}}{10^9\ \text{LB}} = 36.6\ \text{LB/YR} = \underline{37\ \text{LB/YR}}$

TO AIR $= \frac{36.6}{.05} \times 0 = \underline{0\ \text{lb/yr}}$

WASTE RELEASE:

TOTAL LAND RELEASE $= \left[(14{,}650\ \text{TPY})\left(\frac{8.6}{10^6}\right) + (1112\ \text{TPY})\left(\frac{791}{10^6}\right) \right](2000)$

$= 2011\ \text{LB/YR}$

RELEASE TO AIR $= (2011\ \text{LB/YR})(0.047) = \underline{94\ \text{LB/YR}}$

RELEASE TO LAND = $\underline{0}$ (Degraded)

NOTE: SEE APPENDICES FOR CALCULATION BACKGROUND INFORMATION.

1987 SARA 313 REPORT
RELEASE INVENTORY
LAKE CHARLES REFINERY

NICKEL

SOURCE	AMOUNT RELEASED (lb/yr)	% OF TOTAL RELEASE TO MEDIUM
AIR POINT RELEASES	N/A	
AIR NON-POINT RELEASES		
Loading Loss	0.	
HDS Catalyst Hdlg	32.	
Total Non-point Release	32. (<.499)	
TOTAL AIR RELEASE	32.	
WATER RELEASE	207. (<.499)	
LAND RELEASE		
On-Site (Landfarm)	111. (<.499)	2
Off-Site (Landfill)	6900.	98
TOTAL LAND RELEASE	7011.	100

SAL 000005274

NICKEL

LAKE CHARLES

AIR

POINT RELEASE = N/A

NON-POINT RELEASE (HDS Catalyst Hdlg.) = $\frac{100 \text{ LB}}{\text{Dump}}$ (Assumed Loss(1)) × 8 HDS × $\frac{12}{9}$ (9 Month AVG RUNTIME) = 1067 LB

= 1067 LB × .04 (Ni/Co)(2) × .74 (Ni)(2)

= 32 LB Ni

BASIS = ENGINEERING CALCULATIONS

WATER

WATER RELEASE (EFFLUENT) = $7.49 \times 10^9 \times \frac{.075}{10^6}$ (Assumed D.L.) × $\frac{1}{2}$ = 280 LB/YR Cr

= 280 × .74 Ni = 207 LB/YR Ni

BASIS = ENGINEERING CALCULATIONS

LAND

LAND RELEASE (ON-SITE LAND FARM) = 150 LB MAX (Sludge) × .74 Ni = 111 LB Ni

BASIS = ENGINEERING JUDGEMENT

LAND RELEASE (OFF-SITE LAND FILL) = 116 TONS × .04 = 9200 LB Ni/Co × .74

= 6900 LB Ni

BASIS = ENGINEERING JUDGEMENT

NOTES (1) PONCA CITY ESTIMATES PER STEVE JONES

(2) COMPOSITION FROM Lloyd Winger PHONE CONVERSATION

Conoco Inc.
Calculation Sheet

Made By
Checked By
Date
Page of

Title

Job No.
Field
State

SAL 000005275

1987 SARA 313 REPORT
RELEASE INVENTORY
LAKE CHARLES REFINERY

PHENOL

SOURCE	AMOUNT RELEASED (lb/yr)	
AIR POINT RELEASE		
Storage Tanks	1.	
Total Point Release	1.	(<999)
AIR NON-POINT RELEASE		
Loading Loss	0.	
Waste Release to Air	1.	
Phenolic Caustic Pug	609.	
Total Non-point Release	610.	(<999)
TOTAL AIR RELEASE	611.	
WATER RELEASE	703.	(<999)
LAND RELEASE		
On-Site (Landfarm)	0.	
Off-Site (Landfill)	N/A	
TOTAL LAND RELEASE	0.	

SAL 000005276

1987 SARA 313 REPORT
WASTE TREATMENT METHODS AND EFFICIENCY
LAKE CHARLES REFINERY

PHENOL

ORIGINAL WASTESTREAM	TREATMENT METHOD	TREATMENT EFFICIENCY	RANGE OF INFLUENT CONCENTRATION
WASTEWATER	BIOLOGICAL TREATMENT (AEROBIC)	95%(a)	0.01-1%(a)
SOLID WASTE	BIOLOGICAL TREATMENT (AEROBIC)	100%(b)	1-100 ppm(c)

(a) Based on data provided by Brandt Butler.

(b) See "Estimating Land Treatment Air Emissions" in Solid Waste Data Appendix.

(c) See Waste Composition Data in Solid Waste Data Appendix.

PHENOL

LAKE CHARLES

AIR

VP = .0039 psia @ 30% phenol ; VP_{H_2O} over caustic = 15 mm Hg = 0.29 psia (1)

POINT RELEASE = STORAGE LOSS = 1176 × .3 × $\frac{.0039}{.2939}$ = .47 LB

(See Attached Printouts)

NON-POINT RELEASE = FUGITIVE LOSS

3 PUMPS, 35 VALVES, 126 FLANGES

= [1.4 × 3(.097) + 35(.00051) + 126(.00013)] × 2 = .365 × .3 (% phen

= 609 LB

WASTE RELEASE TO AIR = 1.22 LB = 1 LB (2)

WATER

WATER RELEASE = $\frac{1.9 \text{ LB}}{\text{DAY}}$ × 365 = 703 LB (0% VOLATIL

BASIS = MONITORING DATA

TREATMENT = BIOLOGICAL (AEROBIC), 95% EFFICIENT,
INFLUENT CONCENTRATION = 0.01 - 1 %

LAND

LAND RELEASE = 0 (Degraded)
(ON-SITE, LAND FARM)

BASIS = ENGINEERING JUDGEMENT

TREATMENT = BIOLOGICAL (AEROBIC), 100% EFFICIENT,
INFLUENT CONCENTRATION = 1-100 PPM

NOTES: (1) FROM EPA GUIDANCE DOC. AND CRC HANDBOOK
(2) SEE APPENDIX F - SOLID WASTE DATA

Made B.
Checked B.
Date
Page of

Conoco Inc
Calculation Sheet

Title

Job No.
Field
State

SAL 000005278

SHEET

VOC EMISSION CALCULATIONS
FIXED ROOF

DATE	=	14-May-88
TIME PERIOD : MONTH,YR START	=	jan 87
: MONTH,YR END	=	dec 87
LOCATION	=	lake charles
POINT SOURCE I.D. #	=	t-1801
MATERIAL STORED	=	phenolic caustic
TANK CAPACITY (bbls)	=	2100
THROUPUT (bbls/yr)	=	5714

BREATHING LOSS

	TANK DIAMETER (ft)	D =	25
	TANK HEIGHT (ft)	H =	24
[ALT] A	VAPOR SPACE HEIGHT (ft)	h =	12

14-May-88 10:08 AM

SHEET

	TANK DIAMETER (ft)	D =	25
	TANK HEIGHT (ft)	H =	24
[ALT] A	VAPOR SPACE HEIGHT (ft)	h =	12
[ALT] B	DAILY TEMP CHANGE (F)	dT =	20
[ALT] C	MOLECULAR WEIGHT	Mv =	18
[ALT] D	VAPOR PRESSURE (psia)	Pv =	2.29
[ALT] E	PRESSURE (psia)	Pa =	14.7
[ALT] F	PRODUCT FACTOR	Kc =	1
[ALT] G	PAINT FACTOR	Kp =	1
[ALT] H	SMALL TANK FACTOR	C =	0.98
	BREATHING LOSS (lbs)	Lb =	117

WORKING LOSS

	MOLECULAR WEIGHT	Mv =	18

14-May-88 10:08 AM

SAL 000005279

	BREATHING LOSS (lbs)	Lb =		117
		WORKING LOSS		
	MOLECULAR WEIGHT	Mv =		18
	VAPOR PRESSURE	Pv =		0.09
	# OF TURNOVERS PER YEAR	N =		1.720951381
	TANK CAPACITY (gal)	V =		58200
ALT. I	TURNOVER FACTOR	Kn =		
	PRODUCT FACTOR	Kc =		1
	WORKING LOSS (lbs)	Lw =		0
	TOTAL LOSS (lb/yr)	Lt =	Lb + Lw	
		=		117

14-May-95 10:06 AM

SAL 000005280

1987 SARA 313 REPORT
RELEASE INVENTORY
LAKE CHARLES REFINERY

PHOSPHORIC ACID

SOURCE	AMOUNT RELEASED (LB/YR)
AIR POINT RELEASE	N/A
AIR NON-POINT RELEASE	N/A
TOTAL AIR RELEASE	N/A
WATER RELEASE	0.
LAND RELEASE	
On-Site (Landfarm)	N/A
Off-Site (Landfill)	0.
TOTAL LAND RELEASE	0.

SAL 000005281

1987 SARA 313 REPORT
WASTE TREATMENT METHODS AND EFFICIENCY
LAKE CHARLES REFINERY

PHOSPHORIC ACID

GENERAL WASTESTREAM	TREATMENT METHOD	TREATMENT EFFICIENCY	RANGE OF INFLUENT CONCENTRATION
WASTEWATER	NEUTRALIZATION	100%(a)	>1%(a)
SOLID WASTE	NEUTRALIZATION	100%(a)	>1%(a)

(a) Based on data provided by Brandt Butler.

PHOSPHORIC ACID

LAKE CHARLES

AIR

AIR RELEASE = N/A

WATER

WATER RELEASE = 0

BASIS = pH MONITORING

TREATMENT = NEUTRALIZATION 100% EFFICIENT
INFLUENT CONCENTRATION = >1%

LAND

LAND RELEASE = 0
(OFF-SITE, LAND FILL)

BASIS = ENGINEERING JUDGEMENT

TREATMENT = NEUTRALIZATION, 100% EFFICIENT
INFLUENT CONCENTRATION = >1%

1987 SARA 313 REPORT
RELEASE INVENTORY
LAKE CHARLES REFINERY

PROPYLENE

SOURCE	AMOUNT RELEASED (lb/yr)	% OF TOTAL RELEASE TO MEDIUM
AIR POINT RELEASES	N/A	N/A
AIR NON-POINT RELEASES		
Fugitive Equipment Loss		
Regular Coker	72.	0
Premium Coker	240.	0
No. 2 Coker	420.	1
Gas Recovery Plant	14540.	23
FCC	12300.	19
Cryo	6200.	10
Cat Poly	14300.	23
Thermal Cracker	222.	0
PSC	8200.	13
Alkylation	5100.	8
Acid Plant	520.	1
Fuel Gas Fugitives	1000.	2
Wastewater Release to Air	0.	0
Waste Release to Air	0.	0
Total Non-point Release	63114. (63000)	100
TOTAL AIR RELEASE	63114.	100
WATER RELEASE	N/A	N/A
LAND RELEASE	N/A	N/A

SAL 000005284

PROPYLENE CALCULATIONS

POINT AIR RELEASES — N/A (GAS)

FUGITIVE EQUIPMENT LOSSES — SEE APPENDIX I

NONE TO WW ; LAND - (GAS)

1987 SARA 313 REPORT
RELEASE INVENTORY
LAKE CHARLES REFINERY

SODIUM HYDROXIDE

SOURCE	AMOUNT RELEASED (lb/yr)
AIR POINT RELEASE	0.
AIR NON-POINT RELEASE	0.
TOTAL AIR RELEASE	0.
WATER RELEASE	0.
LAND RELEASE	N/A

1987 SARA 313 REPORT
WASTE TREATMENT METHODS AND EFFICIENCY
LAKE CHARLES REFINERY

SODIUM HYDROXIDE

GENERAL WASTESTREAM	TREATMENT METHOD	TREATMENT EFFICIENCY	RANGE OF INFLUENT CONCENTRATION
WASTEWATER	NEUTRALIZATION	100%(a)	>1%(a)

(a) Based on data provided by Brandt Butler.

SODIUM HYDROXIDE (solution) LAKE CHARLES

AIR

BPT = 1300°C
VP = NIL (EPA RELEASE CALCULATION GUIDANCE)
WW VOLATILITY

AIR RELEASE (FUGITIVE & STACK) = 0

BASIS: ENGINEERING CALCULATIONS / JUDGEMENT

WATER

WATER RELEASE = 0

BASIS: pH MONITORING - 6 TO 9

TREATMENT = NEUTRALIZATION, 100% EFFICIENT,
INFLUENT CONCENTRATION = > 1 %

LAND

LAND RELEASE = N/A

BASIS = NO SPILLS; RECYCLE SPENT CAUSTIC
NEUTRALIZED IN WASTEWATER

USE = CAUSTIC WASH

1987 SARA 313 REPORT
RELEASE INVENTORY
LAKE CHARLES REFINERY

SODIUM SULFATE

SOURCE	AMOUNT RELEASED (lb/yr)
AIR POINT RELEASE	N/A
AIR NON-POINT RELEASE	N/A
TOTAL AIR RELEASE	N/A
WATER RELEASE	280000.
LAND RELEASE	
On-Site (Landfarm)	170000.
Off-Site (Landfill)	N/A
TOTAL LAND RELEASE	170000.

SODIUM SULFATE

LAKE CHARLES

AIR

AIR RELEASE - N/A

COOLING TOWER DRIFT Na_2SO_4 LOSS ASSUMED TO BE TO LAND (IE, FALLS TO LAND QUICKLY).

WATER

WATER RELEASE = ACID USED - CT DRIFT

ACID USAGE = 722,000 LB @ CT × $\frac{142}{98}$

= 1,046,163 LB Na_2SO_4 POSSIBLE

1,046,000 - 169,000 DRIFT = 880,000 LB Na_2SO_4 MAX (IN EFFLUENT FROM PLANT ACTIVITY

BASIS = ENGINEERING JUDGEMENT

LAND

(CT DRIFT)*

Conoco Inc.
Calculation Sheet

Job No.

Checked By

Date

Title

Field

Page

State

SAL 000005290

CALCULATIONAL METHODS
SARA 313

Storage Tanks

1. Calculated total VOC loss (breathing and working) using AP-42 correlations.
2. Used Raoult's law and the liquid weight fractions to estimate vapor weight fractions of specific chemicals.

Loading

1. Calculated total VOC loss using AP-42 correlations.
2. Assumed 98% efficiency for vapor recovery or flaring.
3. Used Raoult's law and the liquid weight fractions to estimate vapor weight fractions of specific chemicals.

API Separators

1. Calculated total VOC using AP-42 emission factors and refinery crude throughput.
2. Assumed crude oil component composition for separator oils.
3. Used Raoult's law and the liquid weight fractions to estimate vapor weight fractions of specific chemicals.

Fugitives

1. Estimated number of sources per unit from published (Radian) study and/or VOC monitoring data.
2. Used SOCMI emission factors to calculate total VOC emissions for each unit. Used leak/no leak factors where VOC monitoring data were available.
3. Divided the total VOC by the number of "major" streams for each unit.
4. Multiplied the VOC per stream by the liquid weight fraction of the chemical present in each stream.
5. All relief valves servicing streams with toxic chemical compositions above deminimus were considered to be closed; i.e., tied into a flare system.

Process Drains

1. Estimated the number of drains from the Radian study or VOC monitoring data.

NOTE: SAMPLE CALCULATIONS FOLLOW

2. Assumed 75 % are covered based on Lake Charles VOC monitoring data. Also assumed covered drains released 90% less VOC than uncovered drains.
3. Used AP-42 emission factor to calculate total VOC emission from process drains.
4. Assumed crude oil component composition.
5. Used Raoult's law and the liquid weight fractions to estimate vapor weight compositions of specific chemicals.

Cooling Tower

1. Used cooling tower circulation rate or crude throughput and AP-42 emission factors to calculate total VOC emissions.
2. Assumed crude oil composition to calculate release of each chemical.

Wastewater Releases

1. Effluent
   a. Used monitoring data where possible, such as for phenol and ammonia. (Ammonia was corrected to free ammonia)
   b. For other compounds, used snapshot analytical data, such as the 1979 R&D study of Ponca City and Lake Charles wastewater effluents. If no analytical data were available, but the chemical was suspected to be present, data for similar compounds were used.

2. Volatilization
   Volatilization from wastewater treatment impoundments was back-calculated from effluent release estimates and EPA Guidance Document values for treatment efficiency and component volatilization. Volatilization from other impoundments was based on plant provided information.

Land Releases

1. Landfarm
   a. Used landfarm disposal volumes and component analyses to estimate the amount of chemical present.
   b. Used EPA developed data on land treatment to estimate waste component volatilization.
   c. If data were not available, analytical and published data for similar compounds were used.

2. Off-site Disposal
   Disposal records and analytical data were used to calculate component quantities.

3. Impoundments
   a. Impoundments that receive periodic cleanouts, such as wastewater treatment lagoons, were not considered in land release totals.
   b. Releases to land were estimated based on plant provided data.
   c. Leakage to groundwater was not considered a release.

Spills*

1. Used spill volume estimate provided by plant.
2. Calculated the amount volatilized using Raoult's law and the liquid weight fractions to estimate vapor weight fractions of specific chemicals.
3. Assumed all contaminated soil was excavated and stored in a manner that prevented contact with land; i.e., no land release.

* PONCA CITY HAD NONE IN 1987.

LAKE CHARLES (SAMPLE CALC.)

STORAGE TANKS

CALCULATION METHOD:

$$\text{AP-42 VOC} \times \frac{\%\ \text{CHEM (UQ)}}{100} \times \frac{P_{v\ \text{CHEM}}}{P_{v\ \text{TOTAL}}} = \text{CHEM TO AIR}$$

SAMPLE CALCULATION:

$$\text{CYCLOHEXANE (Unfinished Gasoline)} = \left(28.2\ \frac{\text{TONS}}{\text{YR}}\right)\left(\frac{0.9\%}{100}\right)\left(\frac{1.6}{6.2}\right) = \underline{0.0655\ \text{Tons/Yr}}$$

VOC Unfinished Gasoline

wt % Unfinished Gasoline

$$\frac{\text{Vapor Pressure Cyclohexane}}{\text{Vapor Pressure Gas.}}$$

Conoco Inc.
Calculation Sheet

Job By
Checked By
Date
Page

Title

Job No.
Field
State

SAL 000005294

LAKE CHARLES: (SAMPLE CALC)

LOADING LOSS

CALCULATION METHOD:

$$\text{AP-42 VOC} \times \frac{\%\ \text{CHEM (LIQ)}}{100} \times \frac{P_v\ \text{CHEM}}{P_v\ \text{TOTAL}} = \text{CHEM TO A/R}$$

SAMPLE CALCULATION:

$$\text{Benzene (Gasoline)} = 10.62\ \text{TONS/YR} \times \frac{1.76\%}{100} \times \frac{1.5}{6.2} = 0.48\ \text{TONS/YR}$$

wt % Gasoline

VOC FROM COMPUTER RUN

$$\frac{\text{Vapor Pressure Benzene}}{\text{Vapor Pressure Gas}}$$

Conoco Inc.
Calculation Sheet

Made By
Checked By
Date
Page of

Title

Job No.
Field
State

SAL 000005295

LAKE CHARLES (SAMPLE CALC)

FUGITIVE EQUIPMENT LOSS:

CALCULATION METHOD:

$$\frac{\text{No Sources}^{*}}{\text{Unit}} \times \text{SOCMI}^{+} \times \text{RUNTIME} \div \frac{\text{No Maj. Streams}}{\text{Unit}} = \text{VOC}$$

$$\text{VOC} \times \frac{\%\ \text{CHEM}}{100} = \text{CHEM TO AIR}$$

SAMPLE CALCULATION:

No 2 CTU

$$\text{VOC} = \Big[\underset{\substack{\#\ \text{Light Liq. Values} \\ \text{non-leak}}}{71} \underset{\text{Table 0-2}}{(.0038)} + \underset{\substack{\#\ \text{Light Liq. Values} \\ \text{leak}}}{6} \underset{\text{0-2}}{(.19)} + \underset{\substack{\#\ \text{Heavy Liq. Values} \\ \text{leak}}}{144} \underset{\text{0-2}}{(.00051)} + \underset{\substack{\#\ \text{Gas Values} \\ \text{non-leak}}}{147} \underset{\text{0-2}}{(.0011)} + \underset{\substack{\#\ \text{Flanges} \\ \text{non-leak}}}{1647} \underset{\text{0-2}}{(.0018)}$$

$$+ \underset{\substack{\#\ \text{Light Liq. Pump Seal} \\ \text{non-leak}}}{1} \underset{\text{0-2}}{(.026)} + \underset{\substack{\#\ \text{LL Pump} \\ \text{leak}}}{2} \underset{\text{0-2}}{(.96)} + \underset{\substack{\#\ \text{HL Pump} \\ \text{non-leak}}}{7} \underset{\text{0-2}}{(.030)} + \underset{\substack{\#\ \text{Comp.} \\ \text{non-leak}}}{2} \underset{\text{0-2}}{(0.20)} \Big] \times 24\,\frac{hr}{day} \times \underset{\substack{\#\ \text{Days on} \\ \text{Stream}}}{363}\,\frac{day}{yr} \div \frac{2000\,lb}{1\ ton}$$

$$\underset{\substack{\#\ \text{Major} \\ \text{Streams}}}{\div 9} = 3.47\ \frac{\text{Tons}}{\text{YR} \cdot \text{Stream}}$$

* Radian Source Study or LC VOC Monitoring
\+ Leak / No Leak for Units with VOC Monitoring

LAKE CHARLES (SAMPLE CALC)

PROCESS DRAINS:

CALCULATIONAL METHOD:

$$\text{Nº Drains} \times \text{AP-42 Factor} \times 24 \times 365 \times \frac{\%\ \text{CHEM IN CRUDE}}{100} \times \frac{P_v\ \text{CHEM}}{P_v\ \text{TOTAL}} = \text{CHEM TO AIR}$$

SAMPLE CALCULATION:

Benzene =

$$(2229 \times .007\ \tfrac{LB}{HR} + 713 \times .07\ \tfrac{LB}{HR}) \times 24 \times 365 \times \frac{TON}{2000\ LB}$$

2229 ↑ Nº of Process Drains Capped

.007 ↑ AP-42 × 0.1 (90% efficient)

713 ↑ Nº of Process Drains Not Capped

.07 ↑ AP-42

$$\times \frac{0.36}{100} \times \frac{1.5}{3.4} = \underline{0.456\ \frac{TONS}{YR}}$$

0.36 ↑ Wt. Fraction Benzene in Crude

1.5 / 3.4 ↑ Vapor Pressure Benzene / Vapor Pressure Crude

Made By
Checked By
Date
Page of

Conoco Inc.
Calculation Sheet

Title

Job No.
Field
State

SAL 000005297

LAKE CHARLES

(SAMPLE CALC.)

API SEPARATOR

CALCULATION METHOD:

$$\left(\underset{\text{(SUM OF SOURCES)}}{\text{FLOW}} \times \text{AP-42 Factor}\right) \times \frac{\%\ \text{CHEM IN CRUDE}}{100} \times \frac{P_{v\ \text{CHEM}}}{P_{v\ \text{TOTAL}}}$$

= CHEM. TO AIR

SAMPLE CALCULATION:

$$\text{Benzene} = \underset{\text{TOTAL FLOW}}{750\ \frac{\text{Gal}}{\text{Min}}} \times \frac{60\ \text{min}}{\text{hr}} \times \frac{24\ \text{hr}}{\text{day}} \times \frac{365\ \text{day}}{\text{yr}} \times \underset{\text{AP-42 Factor (covered)}}{\frac{0.2\ \text{LB}}{1000\ \text{GAL}}} \times \underset{\frac{\text{Vapor press. Ben}}{\text{Vapor press. Cru}}}{\frac{1.5}{3.4}} \times \underset{\text{wt \% Benz}}{\frac{.36}{100}}$$

= 125.2 LB/YR

Made By
Checked By
Date
Page of

Conoco Inc.
Calculation Sheet

Title

Job No.
Field
State

SAL 000005298

LAKE CHARLES (SAMPLE CALC.)

COOLING TOWERS:

CALCULATION METHOD:

(No P_{CORR} – Stripping Potential)

$$\text{BBL Crude} \times \text{AP-42 Factor} \times (24 \times 365) \times \frac{\%\ \text{Chem in Crude}}{100}$$

= Chem. to Air

SAMPLE CALCULATION:

Benzene =

$$49{,}827{,}700\ \frac{BBL}{YR} \times \underbrace{\frac{1.2\ LB}{1000\ BBL}}_{\text{AP-42}} \times \frac{1\ ton}{2000\ lb.} \times \underbrace{\frac{0.36}{100}}_{\text{Fraction of Benzene in Crude}} = \underline{0.108\ \frac{TONS}{YR}}$$

Made By
Checked By
Date
Page of

Title

Conoco Inc.
Calculation Sheet

Job No.
Field
State

SAL 000005299

LAKE CHARLES (SAMPLE CALC)

WASTE WATER:

CALCULATION METHOD:

Flow × PPB = Chem to Water
(or = ½ × Detection Limit (D.L.) if not detectable
or = 0 if None released to Sewer.)

$$\frac{\text{Flow} \times \text{PPB}}{1 - \%\ \text{Removal}} \times \%\ \text{Volatized} = \text{Chem. to Air}$$

SAMPLE CALCULATION:

Benzene (non-detectable)

$$= \underbrace{7.31 \times 10^9\ \text{LB/YR}}_{\text{Wastewater Avg. Effluent Rate (1667 GPM)}} \times \underbrace{\frac{1}{2} \times \frac{10\ \text{LB}}{10^9\ \text{LB}}}_{\text{PPB Benzene assumed } (\frac{1}{2} \times \text{D.L.})} = 36.6\ \frac{\text{LB}}{\text{YR}}\ \text{Benzene in effluent}$$

$$\frac{36.6\ \text{LB/YR}}{\underbrace{.05}_{(1 - \frac{\%\ \text{Removal}}{100})}} = 732\ \text{LB/YR}\ \text{MAX INFLUENT}$$

$$732\ \text{LB/YR} \times \underbrace{0.24}_{\%\ \text{Benzene Volatized Per Guidance Doc.}} = 175.7\ \frac{\text{LB}}{\text{YR}}\ \text{VOLATIZED}$$

Conoco Inc
Calculation Sheet

Made By
Checked By
Date
Page of

Title

Job No
Field
State

SAL 000005300

LAKE CHARLES (SAMPLE CALC)

LAND RELEASE

CALCULATION METHOD:

Landfarm:

Quantity Dumped × PPM × % Volatized = Chem. to Air

Quantity Dumped × PPM × (1 − % Volatized − % Degraded) = Chem. to Land

SAMPLE CALCULATION:

Benzene:

$$\left(14{,}650 \text{ TONS BIO SOLIDS Dumped} \times \underset{\substack{\uparrow \\ \text{PPM Benzene in Bio Solids}}}{\frac{.239}{10^6}} + 1112 \text{ TONS API SOLIDS Dumped} \times \underset{\substack{\uparrow \\ \text{PPM Benzene in API Solids}}}{\frac{43}{10^6}}\right) \times \frac{2000 \text{ LB}}{\text{TON}} = 102.6 \text{ LB BENZENE IN WASTE}$$

Landfarm: 102.6 LB × .903 = 92.65 LB BENZENE TO AIR

102.6 × (1 − .903 − .097) = 0 LB TO LAND

If Impoundment: 102.6 LB BENZENE TO LAND

1987 SARA 313 REPORT
RELEASE INVENTORY
LAKE CHARLES REFINERY

ALUMINUM OXIDE

SOURCE	AMOUNT RELEASED (lb/yr)
AIR POINT RELEASES	
Stack Emission (FCC)	41600. (42000)
Total Point Release	41600.
AIR NON-POINT RELEASES	N/A
TOTAL AIR RELEASE	41600.
WATER RELEASE	N/A
LAND RELEASE	
On-Site (Landfarm)	N/A
Off-Site (BFI Landfill)	914000. (910000)
TOTAL LAND RELEASE	914000.

SAL 000005302

1987 SARA 313 REPORT
WASTE TREATMENT METHODS AND EFFICIENCY
LAKE CHARLES REFINERY

ALUMINUM OXIDE

GENERAL WASTESTREAM	TREATMENT METHOD	TREATMENT EFFICIENCY	RANGE OF INFLUENT CONCENTRATION
GASEOUS	MECHANICAL SEPARATION		0.01%-1%(a)
GASEOUS	ELECTROSTATIC PRECIPITATOR	99.9%(b)	

(a) Based on Ponca City calculation and the fact that Lake Charles is slightly larger (per Brandt Butler).

(b) Based on manufacturer data (per Brandt Butler,sequential treatment with mechanical separation).

SAL 000005303

ALUMINUM OXIDE

LAKE CHARLES

AIR

NON-POINT RELEASE = N/A

POINT RELEASE = 40 TPY (1) × $\frac{2000 \text{ lb}}{\text{TON}}$ × 0.52 (2)
(FCC STACK) = 41,600 lb/yr ≈ 42,000 lb/yr

BASIS = MASS BALANCE CALCULATIONS

SEQUENTIAL TREATMENT:

① MECHANICAL SEPARATION, INFLUENT CONCENTRATION = 0.01 – 1 % (3)

② ELECTROSTATIC PRECIPITATOR TREATMENT EFFICIENCY (OVERALL) = 99.9 % (4)

WATER

WATER RELEASE = N/A (5)

LAND

LAND RELEASE = 1.8×10^6 (1) − 42,000 = 1,758,000 × .52

= 910,000 LB (LANDFILL, OFF-SITE)

BASIS = MONITORING DATA / MEASUREMENTS

NOTES:
(1) PER BRANDT BUTLER
(2) SEE COMPOSITION DATA, APPENDIX E (PER PETER ANDREWS)
(3) BASED ON PONCA CITY CALCULATION AND FACT THAT L.C. IS SLIGHTLY LARGER (PER BRANDT BUTLER); SEE CALCULATION ON NEXT PAGE
(4) PER BRANDT BUTLER BASED ON MANUFACTURER DATA
(5) SOLIDS TO WW WILL SETTLE; NONE TO EFFLUENT

PARTICULATE CONCENTRATION TO CYCLONE (PONCA CITY)

180 $\frac{TONS}{YR}$ @ 99 % EFFICIENCY

132,875 M^3/MIN

$$\frac{\frac{180}{.01} \times 2000 \times 453.6 \times 1000}{132{,}875 \times 60 \times 24 \times 365} = 234 \frac{mg}{m^3} \times .773$$

= 181 PPM

Made By _____
Checked By _____
Date _____
Page _____ of _____

Conoco Inc.
Calculation Sheet

Title _____

Job No. _____
Field _____ SAL 000005305
State _____

1987 SARA 313 REPORT
RELEASE INVENTORY
LAKE CHARLES REFINERY

AMMONIA

SOURCE	AMOUNT RELEASED (lb/yr)	% OF TOTAL RELEASE TO MEDIUM
AIR POINT RELEASE	N/A	N/A
AIR NON-POINT RELEASE		
Fugitive Equipment Loss		
Crude Unit Inhibitor	840.	26
Wastewater Release to Air	2429.	74
Total Non-point Release	3269. (3200)	100
TOTAL AIR RELEASE	3269.	100
WATER RELEASE	4318. (4300)	
LAND RELEASE	N/A	

SAL 000005306

1987 SARA 313 REPORT
WASTE TREATMENT METHODS AND EFFICIENCY
LAKE CHARLES REFINERY

AMMONIA

GENERAL WASTESTREAM	TREATMENT METHOD	TREATMENT EFFICIENCY	RANGE OF INFLUENT CONCENTRATION
WASTEWATER	BIOLOGICAL TREATMENT (AEROBIC)	36%(a)	1-100 ppm(b)
WASTEWATER	STRIPPING (STEAM)	98%(a)	0.01%-1%(b)

(a) Based on South Plant Biopond Treatment data provided by Steve Jones (Ponca City).

(b) Based on Ponca City data provided by Steve Jones.

AMMONIA

LAKE CHARLES

AIR

BP = −30.9 °C [1]

POINT RELEASE = N/A

NON-POINT RELEASE =

Fugitive Eqpmt Release = Crude Topping Units Only

$= 4 \text{ Valves} \times .012\ lb/h^{(2)} \times 24 \times 365 \times 2 \text{ Crude Towers} = \underline{840\ lb/yr}$

Wastewater Treatment Release to Air

$= \text{Ammonia (In - Out)} = \left(7.49 \times 10^9 \frac{lb\ ww}{yr} \times \frac{0.577\ lb\ NH_3}{10^6\ lb\ ww} \times \frac{1}{1-.36}\right)$

% efficiency degradation

$- 4318$ lb free NH_3 in effluent (see below) $= \underline{2429\ lb/yr}$ [3]

TOTAL NON-POINT RELEASE TO AIR = $\underline{3269\ lb/yr}$

BASIS : ENGINEERING CALCULATION

WATER

24.5 PPM TOTAL Ammonia in WW, pH = 7.4, T = 90°F

$24.5\ ppm \left(\frac{0.02}{0.85}\right) = 0.577\ ppm$ [4] NH_3 (free)

WATER RELEASE $= 7.49 \times 10^9 \frac{lb\ ww}{yr} \times \frac{0.577}{10^6} = \underline{4318}$ lb free NH_3 in effluent

BASIS : ENGINEERING CALCULATION

TREATMENT: ① Biological (Aerobic), 36% Efficient [5], Infl. Conc. = 1-100% [6]

② Stripping - Steam, 98% Efficient [5], Infl. Conc. = 0.01 - 1% [6]

LAND

LAND RELEASE = N/A Either chemically degraded or volatized.

Made By
Checked By
Date
Page of

Conoco Inc
Calculation Sheet

Title

Job No.
Field
State

SAL 000005308

NOTES

(1) Perry's Handbook
(2) See Table D-1, APPENDIX B (EMISSION FACTORS)
(3) Overestimate Assuming All Loss is Volatized.
(4) See Following Free Ammonia Correction Table
(5) Based on Ponca City South Plant Biopond Treatment data (Provided by Steve Jones)
(6) Based on Ponca City data.

Concentrations in mg/L of total ammonia (NH_3 + NH_4^+) which contains an unionized ammonia (NH_3) concentration of 0.02 mg/L. These concentrations of total ammonia meet the standards for NH_3 at the temperature and pH values shown.

pH	Temperature (°C) / °F																
	0 / 32	2 / 36	4 / 39	6 / 43	8 / 46	10 / 50	12 / 54	14 / 57	16 / 61	18 / 64	20 / 68	22 / 72	24 / 75	26 / 79	28 / 82	30 / 86	32 / 90
6.0	250	200	167	143	125	105	90.9	80.0	66.7	58.8	50.0	43.5	37.7	32.8	28.6	24.7	21.7
6.2	133	111	90.9	80.0	66.7	57.1	48.8	42.6	36.4	31.3	27.0	23.3	20.2	17.5	15.3	13.3	11.7
6.4	87.0	74.1	64.5	54.1	46.5	39.2	33.9	29.0	25.0	21.5	18.5	16.0	13.9	12.0	10.5	9.10	7.90
6.6	54.1	45.5	38.5	32.8	27.8	23.8	20.4	17.4	15.0	12.9	11.5	9.70	8.40	7.30	6.30	5.50	4.80
6.8	33.3	28.2	23.8	20.4	17.2	14.8	12.4	10.9	9.40	8.10	6.90	6.00	5.20	4.50	4.00	3.40	3.00
7.0	25.0	20.0	16.7	14.3	12.5	10.5	9.11	8.00	6.90	5.90	5.00	4.40	3.90	3.30	2.90	2.50	2.10
7.2	20.0	11.1	9.52	8.00	6.67	5.71	5.00	4.35	4.26	3.70	3.18	2.78	2.44	2.11	1.82	1.58	1.33
7.4	8.70	7.41	6.45	5.41	4.55	3.92	3.39	2.90	2.70	2.33	2.02	1.75	1.54	1.33	1.16	1.00	0.85
7.6	5.26	4.55	3.85	3.28	2.78	2.38	2.06	1.77	1.71	1.48	1.28	1.12	0.98	0.85	0.74	0.64	0.54
7.8	3.33	2.86	2.41	2.04	1.75	1.50	1.29	1.11	1.09	0.94	0.82	0.71	0.62	0.54	0.47	0.41	0.35
8.0	2.44	2.06	1.75	1.49	1.27	1.09	0.94	0.81	0.69	0.60	0.52	0.46	0.40	0.35	0.31	0.27	0.23
8.2	0.33	1.12	0.96	0.80	0.70	0.60	0.52	0.45	0.45	0.39	0.34	0.30	0.26	0.23	0.20	0.18	0.15
8.4	0.91	0.77	0.66	0.56	0.48	0.42	0.36	0.31	0.29	0.25	0.22	0.19	0.17	0.15	0.13	0.12	0.10
8.6	0.56	0.48	0.41	0.35	0.30	0.26	0.23	0.19	0.19	0.17	0.15	0.13	0.12	0.10	0.09	0.08	0.07
8.8	0.36	0.31	0.26	0.23	0.20	0.17	0.15	0.13	0.13	0.11	0.10	0.09	0.08	0.07	0.07	0.06	0.05
9.0	0.26	0.23	0.19	0.17	0.15	0.13	0.11	0.10	0.09	0.08	0.07	0.06	0.06	0.05	0.05	0.05	0.04
9.2	0.16	0.14	0.12	0.11	0.09	0.08	0.07	0.07	0.06	0.06	0.05	0.05	0.04	0.04	0.04	0.04	0.03
9.4	0.11	0.10	0.09	0.08	0.07	0.06	0.06	0.05	0.05	0.04	0.04	0.04	0.04	0.03	0.03	0.03	0.03
9.6	0.08	0.07	0.06	0.06	0.05	0.05	0.04	0.04	0.04	0.04	0.03	0.03	0.03	0.03	0.03	0.03	0.03
9.8	0.06	0.05	0.05	0.04	0.04	0.04	0.04	0.03	0.03	0.03	0.03	0.03	0.03	0.03	0.03	0.02	0.02
10.0	0.04	0.04	0.04	0.04	0.03	0.03	0.03	0.03	0.03	0.03	0.03	0.02	0.02	0.02	0.02	0.02	0.02
10.2	0.03	0.03	0.03	0.03	0.03	0.03	0.03	0.03	0.02	0.02	0.02	0.02	0.02	0.02	0.02	0.02	0.02

SAL 000005310

1987 SARA 313 REPORT
RELEASE INVENTORY
LAKE CHARLES REFINERY

BENZENE

SOURCE	AMOUNT RELEASED (lb/yr)		% OF TOTAL RELEASE TO MEDIUM
AIR POINT RELEASES			
Storage Tanks			
Floating Roof	582.		5
Fixed Roof	1054.		9
Total Point Release	1636.	(1600)	14
AIR NON-POINT RELEASES			
Loading Loss	1001.		8
Fugitive Equipment Loss			
No. 3 CTU	326.		3
No. 4 HDS	210.		2
No. 5 HDS	12.		0
No. 3 CRU & HDS	616.		5
Regular Coker	6.		0
Premium Coker	10.		0
No. 2 Coker	190.		2
Gas Recovery Plant	218.		2
No. 6 HDS	161.		1
No. 7 HDS	5.		0
No. 2 Crude Unit	326.		3
FCC	232.		2
Lt Gaso Spltr	420.		3
No. 1 HDS	38.		0
No. 2 CRU & HDS	1960.		16
Thermal Cracker	32.		0
FBC	550.		5
Tank Farm/Blending	2520.		21
Process Drains	912.		8
Separators			
API	125.		1
DAF	35.		0
IAF	15.		0
Cooling Tower	216.		2
Wastewater Release to Air	176.		1
Waste Release to Air	93.		1
Total Non-point Release	10405.	(10000)	86
TOTAL AIR RELEASE	12041.		100
WATER RELEASE	37.	(<499)	
LAND RELEASE			
On-Site (Landfarm)	0.		
Off-Site (Landfill)	N/A		
TOTAL LAND RELEASE	0.		

SAL 000005311

1987 SARA 313 REPORT
WASTE TREATMENT METHODS AND EFFICIENCY
LAKE CHARLES REFINERY

BENZENE

GENERAL WASTESTREAM	TREATMENT METHOD	TREATMENT EFFICIENCY	RANGE OF INFLUENT CONCENTRATION
GASEOUS	VAPOR RECOVERY UNIT	98%(a)	0.01-1%(a)
WASTEWATER	BIOLOGICAL TREATMENT (AEROBIC)	95%(b)	1 ppb-1 ppm(c)
SOLID WASTE	BIOLOGICAL TREATMENT (AEROBIC)	100%(d)	1-100 ppm(e)

(a) Based on data provided by Brandt Butler.

(b) See Table A-2 in Wastewater Appendix.

(c) Chemical was not detected, so one-half the detection limit (D.L.= 10 ppb) was assumed (based on 1977 R&D Lake Charles wastewater analysis, Technical Memorandum No. 603-79-350-2 & EPA Guidance Document).

(d) See "Estimating Land Treatment Air Emissions" in Solid Waste Data Appendix.

(e) See Waste Composition Data in Solid Waste Data Appendix.

BENZENE COMPOSITIONS

	Wt %
Regular Gasoline	1.4
Unleaded Gasoline	1.7
Super Unleaded Gasoline	2.4
FCC Gasoline	1.1
LSR Gasoline	3.9
Reformate	3.6
Crude Wet Gas	0.2
Alkylate	<0.1
Naphtha	1.0
Crude	0.3
JP-4	0.3
Debutanizer OH	2.3
Crude NAPH + HDS Effluent	0.3
Coker Gas	0.3

SEE APPENDIX E FOR COMPOSITION BACKGROUND INFO.

BENZENE CALCULATIONS

STORAGE TANKS[1]

FLOATING ROOF = $(4.1\ TPY)\left(\frac{0.3}{100}\right)\left(\frac{1.5}{3.4}\right) + (32.1\ TPY)\left(\frac{1.5}{6.2}\right)\left[(0.27)(0.014) + (0.47)(0.017) + (0.26)(0.024)\right] + (1.7\ TPY)\left(\frac{1.8}{100}\right)\left(\frac{1.5}{6.2}\right) + (28.2\ TPY)\left(\frac{2.03}{100}\right)\left(\frac{1.5}{6.2}\right)$

$= 0.291\ TPY = \underline{582\ LB/YR}$

FIXED ROOF $= (56.22\ TPY)(0.01)\left(\frac{1.5}{1.6}\right) = 0.527\ TPY = \underline{1054\ LB/YR}$

LOADING LOSS[2] $= \left[(10.62\ TPY)(0.0176) + (42.73\ TPY)(0.036) + (19.55\ TPY)(0.0176)\right] \times \left(\frac{1.5}{6.2}\right)(2000) = \underline{1001\ LB/YR}$

FUGITIVE EQPMT. LOSSES:

#3 CTU $= 3.47\ TPY^{(3)}\left[\overset{CRUDE}{0.003} + \overset{OH}{0.002} + \overset{LSR}{0.039} + \overset{NAPHTHA}{0.003}\right] = 0.1631\ TPY = \underline{326\ LB/YR}$

PROCESS DRAINS $= 286.9\ TPY^{(4)}(0.0036)\left(\frac{1.5}{3.4}\right) = 0.456\ TPY = \underline{912\ LB/YR}$

API $= (39.42\ TPY)^{(5)}\left(\frac{0.36}{100}\right)\left(\frac{1.5}{3.4}\right)(2000) = \underline{125\ LB/YR}$

COOLING TOWER $= (49827.7\ MBBL)^{(6)}\left(\frac{1.2\ LB}{MBBL}\right) \times \left(\frac{0.36}{100}\right) = 0.108\ TPY = \underline{216\ LB/YR}$

NOTES:
(1) SEE APPENDIX H FOR STORAGE TANK VOC DATA
(2) SEE APPENDIX J FOR LOADING LOSS VOC DATA
(3) SEE APPENDIX I FOR FUGITIVE UNIT VOC CALCULATIONS AND REST OF BENZENE CALCULATIONS FOR EQPMT. LOSS.
(4) SEE APPENDIX I FOR PROCESS DRAIN VOC.
(5) SEE APPENDIX G FOR API, DAF, and IAF VOC DATA AND CALCULATIONS.
(6) SEE APPENDIX G FOR COOLING WATER VOC.

WASTEWATER (TO AIR)[1] $= 7.31 \times 10^9 \frac{LB}{YR} \times \frac{5\ LB}{10^9\ LB}$ (½ D.L.) $\times \frac{1}{.05}$ (1 − 95% EFF) $\times 0.24$ (% Vol) $= \underline{176\ LB/YR}$

WASTE WATER (TO EFFLUENT)[1] $= 7.31 \times 10^9 \frac{LB}{YR} \times \frac{5\ LB}{10^9\ LB} = \underline{37\ LB/YR}$

<u>WASTE DISPOSAL</u>[2]

TOTAL TO LANDFARM $= 7.0 + 95.6 = 102.6\ LB/YR = 103\ \frac{LB}{YR}$

RELEASE TO AIR $= (102.6\ LB/YR)(0.903) = 92.65\ \frac{LB}{YR} = \underline{93\ LB/YR}$

RELEASE TO LAND: <u>0</u> (REMAINING 10 LB/YR DEGRADED)

<u>NOTES</u>:

(1) SEE APPENDIX G FOR WASTEWATER CALCULATION DATA (ALSO SEE METHODS SECTION).

(2) SEE APPENDIX F FOR WASTE COMPOSITION DATA AND COMPONENT DISPOSAL CALCULATIONS.

1987 SARA 313 REPORT
RELEASE INVENTORY
LAKE CHARLES REFINERY

BIPHENYL

SOURCE	AMOUNT RELEASED (lb/yr)	% OF TOTAL RELEASE TO MEDIUM
AIR POINT RELEASE		
Storage Tanks		
Floating Roof	1.	0
Fixed Roof	0.	0
Total Point Release	1. (<499)	0
AIR NON-POINT RELEASE		
Fugitive Equipment Loss		
FCC	144.	51
Tank Farm/Blending	138.	49
Total Non-point Release	282. (<499)	100
TOTAL AIR RELEASE	283. ~~(<499)~~	100
WATER RELEASE	37. (<499)	
LAND RELEASE		
On-Site (Landfarm)	0.	
Off-Site (Landfill)	N/A	
TOTAL LAND RELEASE	0.	

SAL 00005316

1987 SARA 313 REPORT
WASTE TREATMENT METHODS AND EFFICIENCY
LAKE CHARLES REFINERY

BIPHENYL

GENERAL WASTESTREAM	TREATMENT METHOD	TREATMENT EFFICIENCY	RANGE OF INFLUENT CONCENTRATION
GASEOUS	VAPOR RECOVERY UNIT	98%(a)	0.01-1%(a)
WASTEWATER	BIOLOGICAL TREATMENT (AEROBIC)	90%(b)	1 ppb-1 ppm(c)
SOLID WASTE	BIOLOGICAL TREATMENT (AEROBIC)	100%(d)	1-100 ppm(e)

(a) Based on data provided by Brandt Butler.

(b) Assumption based on data for similar organic compounds (see Table A-2 in Wastewater Appendix).

(c) Chemical was not detected, so one-half the detection limit (D.L.= 10 ppb) was assumed (based on 1977 R&D Lake Charles wastewater analysis, Technical Memorandum No. 603-79-350-2 & EPA Guidance Document).

(d) Assumption based on data for similar organic compounds (see "Estimating Land Treatment Air Emissions" in Solid Waste Data Appendix).

(e) Assumption based on data for similar organic compounds (see Waste Composition Data in Solid Waste Data Appendix).

BIPHENYL CALCULATIONS

STORAGE TANKS: (1.0 WT% IN HEAVY FCC GASOLINE*)

$$= 28.2 \text{ TPY} \times 0.01 \times \frac{1}{2} \times \frac{.0193}{6.2} \times 2000 = \underline{1 \text{ LB/YR}} \text{ (Floating Roof)}$$

ASSUMING 50/50 HY/LT FCC GASO

FUGITIVE LOSSES:

SEE APPENDIX I

OTHER LOSSES: THERE IS NO DATA FOR CRUDE BIPHENYL COMP. ASSUME $\ll 1\%$, SO PROCESS DRAINS, API, COOLING TOWERS = 0

WASTEWATER RELEASE:

WW DATA D.L. = NO BIPHENYL SPECIFICS

$$\text{TO WATER} = 7.31 \times 10^9 \frac{\text{LB}}{\text{YR}} \times \frac{5 \text{ LB}}{10^9 \text{ LB}} = \underline{37 \text{ LB/YR}}$$

$$\text{TO AIR} = \frac{37 \text{ LB/YR}}{.05} = 732 \frac{\text{LB}}{\text{YR}} \times 0 = \underline{0 \text{ LB/YR}}$$

V.P. = assumed same as Naphthalene

WASTE RELEASES:

NO DATA AVAILABLE ON BIPHENYL, ASSUMED SOME WOULD BE IN WASTES (SMALL AMT). ALL WASTES TO LANDFARM DEGRADED. LOSSES TO AIR FROM WASTE NEGL. (WW NUMBER PROBABLY COVERS THESE).

* THIS IS THE ONLY STREAM ASSUMED TO CONTAIN APPRECIABLE BIPHENYL (SEE APPENDIX E).

Conoco Inc.
Calculation Sheet

Made By
Checked By
Date
Page of
Title
Job No.
Field
State

SAL 000005318

1987 SARA 313 REPORT
RELEASE INVENTORY
LAKE CHARLES REFINERY

1,3-BUTADIENE

SOURCE	AMOUNT RELEASED (lb/yr)	% OF TOTAL RELEASE TO MEDIUM
AIR POINT RELEASE	N/A	N/A
AIR NON-POINT RELEASE		
Fugitive Equipment Loss		
Gas Recovery Plant	116.	28
FCC	116.	28
Cryo	0.	0
Cat Poly	64.	16
PBC	68.	17
Alkylation	42.	11
Acid Plant	2.	0
Tank Farm/Blending	0.	0
Total Non-point Release	408. (410.)	100
TOTAL AIR RELEASE	408.	100
WATER RELEASE	N/A	N/A
LAND RELEASE	N/A	N/A

SAL 000005319

1,3 BUTADIENE CALCULATIONS

GASEOUS COMPOUND - ALL LOSSES ARE FUGITIVE FROM EQUIPME

SEE APPENDIX I FOR FUGITIVE EQUIPMENT VOC CALCULATION

1987 SARA 313 REPORT
RELEASE INVENTORY
LAKE CHARLES REFINERY

CHLORINE

SOURCE	AMOUNT RELEASED (lb/yr)
AIR POINT RELEASE	N/A
AIR NON-POINT RELEASE	
Cooling Tower	2018.
Total Non-point Release	2018. (2000)
TOTAL AIR RELEASE	2018.
WATER RELEASE	N/A
LAND RELEASE	N/A

CHLORINE

LAKE CHARLES

AIR

POINT RELEASE = N/A

NON-POINT RELEASE:

5 Cooling Towers, 1 Boiler Inj. - WW Addition
2 Valves, 8 Flanges each:

$= [2(.012) + 8(.0018)]^{(*)} \times 24 \times 365 = 336 \frac{lb}{yr}$ per Inj. Pt.

$= 336 \ lb/yr \times (5+1) = 2018 \ LB/YR$

TOTAL AIR RELEASE = 2018 LB/YR.

BASIS: ENGINEERING JUDGEMENT / CALCULATIONS

WATER: WATER RELEASE = N/A (IONIZES)

LAND: LAND RELEASE = N/A (GASEOUS; NONE IN WASTE)

(*) SEE APPENDIX B - EMISSION FACTORS

1987 SARA 313 REPORT
RELEASE INVENTORY
LAKE CHARLES REFINERY

COBALT

SOURCE	AMOUNT RELEASED (lb/yr)	% OF TOTAL RELEASE TO MEDIUM
AIR POINT RELEASE	N/A	
AIR NON-POINT RELEASE		
HDS Catalyst Handling	11.	
Total Non-point Release	11. (<499)	
TOTAL AIR RELEASE	11.	
WATER RELEASE	73. (<499)	
LAND RELEASE		
On-Site (Landfarm)	39. (<499)	2
Off-Site (Landfill)	2413. (2400)	98
TOTAL LAND RELEASE	2452.	100

SAL 000005323

COBALT

LAKE CHARLES

AIR

POINT RELEASE = N/A

NON-POINT RELEASE (HDS Catalyst Hdlg.): $\frac{100\ LB}{DUMP}$ (Assumed Loss)(1) $\times$ 8 HDS Units $\times \frac{12}{9}$ (9 MONTH AVG. RUNTIME)(1) $= 1100 \times .04$ (% Ni)

= 43 LB Ni/Co $\times$ .26 Co USAGE (2)

= 11 LB Co

BASIS: ENGINEERING CALCULATIONS

TREATMENT: N/A

WATER

WATER RELEASE $= 7.49 \times 10^9 \times \frac{.075}{2}$ (Assumed D.L.) $\times \frac{1}{10^6}$

= 280 LB/YR Ni/Co (max) $\times$ .26 Co USAGE

= 73 LB/YR Co

BASIS = ENGINEERING CALCULATIONS / JUDGEMENT

TREATMENT: N/A

LAND

LAND RELEASE (ON-SITE) (LAND TREATMENT) = 150 LB SLUDGE $\times$ .26 Co

= 39 LB/YR Co

BASIS = ENGINEERING CALCULATION / JUDGEMENT

LAND RELEASE (OFF-SITE) (LANDFILL) = 116 TONS $\times$ .04 $\times$ .26 Co USAGE

= 2413 LB Co

BASIS = ENGINEERING CALCULATION / JUDGEMENT

NOTES: (1) PONCA CITY ESTIMATES PER STEVE JONES.
(2) COMPOSITION FROM Lloyd WINGER PHONE CONVERSATION.

Conoco Inc.
Calculation Sheet

Made By | Checked By | Date | Page of | Title | Job No. | Field | State

SAL 000005324

1987 SARA 313 REPORT
RELEASE INVENTORY
LAKE CHARLES REFINERY

CRESOL

SOURCE	AMOUNT RELEASED (lb/yr)	% OF TOTAL RELEASE TO MEDIUM
AIR POINT RELEASE		
Storage Tanks	1.	1
Total Point Release	1. (<499)	1
AIR NON-POINT RELEASE		
Loading Loss	0.	0
Phenolic Caustic Fug.	88.	99
Total Non-point Release	88. (<499)	99
TOTAL AIR RELEASE	89.	100
WATER RELEASE	105. (<499)	
LAND RELEASE		
On-Site (Landfarm)	0.	
Off-Site (Landfill)	N/A	
TOTAL LAND RELEASE	0.	

SAL 000005325

1987 SARA 313 REPORT
WASTE TREATMENT METHODS AND EFFICIENCY
LAKE CHARLES REFINERY

CRESOL

GENERAL WASTESTREAM	TREATMENT METHOD	TREATMENT EFFICIENCY	RANGE OF INFLUENT CONCENTRATION
WASTEWATER	BIOLOGICAL TREATMENT (AEROBIC)	95%(a)	0.01%-1%(b)
SOLID WASTE	BIOLOGICAL TREATMENT (AEROBIC)	100%(c)	1-100 ppm(d)

(a) See Table A-2 in Wastewater Appendix.

(b) Based on Ponca City data provided by Steve Jones.

(c) See "Estimating Land Treatment Air Emissions" in Solid Waste Data Appendix.

(d) Based on Ponca City Solid Waste Composition Data.

CRESOL

LAKE CHARLES

AIR BP = 201.9 °C , VP = 0.0029 PSIA (1)

POINT AIR RELEASE:

STORAGE LOSS: 11.7 lb (2) × .3 × .15 (3) × $\frac{.0029}{.294}$ (2) = .05 LB. < 1 LB

(phenolic caustic loss) (phenol/cresol fraction) (cresol fraction)

FUGITIVE AIR RELEASE:

1954 lb/yr. × .3 × .15 = 88 LB.

BASIS: ENGINEERING CALCULATIONS

WATER

WATER RELEASE = 703 LB × .15 = 105 LB.

VOLATIZED = 0 (PHENOL - EPA GUIDANCE DOCUMENT)

BASIS = ENGINEERING CALCULATIONS

TREATMENT = BIOLOGICAL - AEROBIC, 95% EFFICIENT, INFLUENT CONCENTRATION = 0.01 - 1%

LAND

LAND RELEASE = 0 (100% Degraded)
(LAND FARM)

BASIS = ENGINEERING JUDGEMENT

TREATMENT = BIOLOGICAL - AEROBIC, 100% EFFICIENT, INFLUENT CONCENTRATION = 1-100 PPM

NOTES: (1) FROM EPA GUIDANCE DOC. and CRC Handbook
(2) SEE ATTACHED PRINT OUT
(3) PHENOLIC CONCENTRATION PER STEVE JONES / GENE HOPKINS

Conoco Inc.
Calculation Sheet

Made By | Job No.
Checked By
Date | Title | Field
Page of | State

SAL 000005327

A35: SHEET

```
1
2                                   VOC EMISSION CALCULATIONS
3                                         FIXED ROOF
4
5
6          DATE                                  =          14-May-88
7          TIME PERIOD : MONTH,YR START             =          jan 87
8                      : MONTH,YR END               =          dec 87
9          LOCATION                              =       lake charles
10         POINT SOURCE I.D. #                   =          t-1801
11         MATERIAL STORED                       =   phenolic caustic
12         TANK CAPACITY (bbls)                  =           2100
13         THRUPUT (bbls/yr)                     =           5714
14
15                                  BREATHING LOSS
16                                  --------------
17
18         TANK DIAMETER (ft)                D =                25
19         TANK HEIGHT (ft)                  H =                24
20  [ALT] A VAPOR SPACE HEIGHT (ft)           h =                12
14-May-88  10:08 AM
```

A35: SHEET

```
16                                  --------------
17
18         TANK DIAMETER (ft)                D =                25
19         TANK HEIGHT (ft)                  H =                24
20  [ALT] A VAPOR SPACE HEIGHT (ft)           h =                12
21  [ALT] B DAILY TEMP CHANGE (F)            dT =                20
22  [ALT] C MOLECULAR WEIGHT                 Mv =                18
23  [ALT] D VAPOR PRESSURE (psia)            Pv =              0.29
24  [ALT] E PRESSURE (psia)                  Pa =              14.7
25  [ALT] F PRODUCT FACTOR                   Kc =                 1
26  [ALT] G PAINT FACTOR                     Fp =                 1
27  [ALT] H SMALL TANK FACTOR                 C =              0.98
28
29         BREATHING LOSS (lbs)             Lb =               117
30
31
32                                  WORKING LOSS
33                                  ------------
34
35         MOLECULAR WEIGHT                 Mv =                18
14-May-88  10:08 AM
```

SAL 000005328

	BREATHING LOSS (lbs)	Lb =		117
		BURNING LOSS		
	MOLECULAR WEIGHT	Mv =		18
	VAPOR PRESSURE	Pv =		0.09
	# OF TURNOVERS PER YEAR	N =		2.720952381
	TANK CAPACITY (gal)	V =		88200
(ALT) I	TURNOVER FACTOR	Kn =		
	PRODUCT FACTOR	Kc =		1
	WORKING LOSS (lbs)	Lw =		0
	TOTAL LOSS (lb/yr)	Lt =	Lb + Lw	
		=		117

****

14-May-88 10:08 AM

SAL 000005329

Jack
Here are the sodium sulfate release calculations for Lake Charles refinery. Please place this section behind the sodium sulfate overall release summary in the body of the 1987 L.C. SARA documentation.

Paul Steele 5903

SAL 000005330

LC - Sodium Sulfate Calculations (*) 10/14/88

Mu (well) 2600 gpm = 31.2 m #/D Avg Cyc = 3.6

D = Mu ÷ Cycles = 31.2 ÷ 3.6 = 8.7 x 365 = 3160 m #/yr

D, ft 0.1% RR = .001 x 102 mgpm = 102 gpm = 447 m #/yr

Cl_2 use = (84,000 #/yr ÷ 3160) x 1.41 = 38 ppm as $CaCO_3$

SO_4 use = (731,000 #/yr ÷ 3160) x .95 x .98 x 1.04 = 224 ppm *

purity % SO_4 To $CaCO_3$

* H_2SO_4 use is an estimate - water analysis suggests 419 ppm as $CaCO_3$ is a better #. (112 ppm x 3.6 x 1.04 = 419)

Cl^- = Cl^-(mu) x cycles = 60 ppm x 3.6 x 1.41 = 305 ppm as $CaCO_3$

$SO_4^=$ = $SO_4^=$(mu) x cycles = <10 ppm x 3.6 x 1.04 = <37 ppm as $CaCO_3$

					%
Total Cl^-	38	+	305	=	343
Total $SO_4^=$	419	+	37	=	456
					799

57%

Na = 60 ppm(mu) x 3.6 cy x 2.18 = 471 ppm as $CaCO_3$

#/yr Na_2SO_4 - in d. I = 471 ppm Na x .57 x 1.42 x 447 m #/yr = 170 m #/yr Na_2SO_4 *

% SO_4 of total anions as $CaCO_3$ To Na_2SO_4 Drift

** Adjust for Added SO_4 only: 170 m x 419 ppm / 456 ppm = 156 m #/yr Na_2SO_4

(*) Per Mike Alden, Technical Services, Ponca City

M L Alden

AMERICAN REFINING
OCT 19
COPY FILE

10.	Mu	Y-1	Mu Cy		Y-2	Mu Cy		Y-3	Mu Cy	
M	134	54	456	402	67	442	375	40	462	442
SO_4	<10	425	<34	>391	393	<33	>360	435	<35	>400
Cl	68	234	231	3/364 8	226	224	2/362 12	234	235	0/400
Na	54	204	184	20	201	178	23	207	186	21
Ca	74	261	3.5	-	253	3.4	-	261	3.5	-
SiO_2	55	182	3.3	-	178	3.2	-	185	3.4	-
Avg cge	—	—	3.4	—	-	3.3	—	—	3.45	—
8/20/87										
M	130	59	462	403	53	462	404	55	468	413
SO_4	<10	449	<36	>413	443	<36	>407	463	<36	>427
Cl	63	255	224	31/364 -41	243	224	19/426 -22	255	227	28/455 -41
Na	59	216	209	7	211	209	2	219	212	7
Ca	74	267	3.6	-	265	3.6	-	277	3.7	-
SiO_2	50	198	3.5	-	194	3.5	-	198	3.5	-
Avg cge	-	—	3.55	-	-	3.55	-	—	3.6	-
7/1/87										
M	132	37	422	385	39	409	370	41	422	381
SO_4	<10	383	<32	>351	371	<31	>340	392	<32	360
Cl	64	218	205	13/364 21	214	198	16/356 14	220	205	15/375
Na	55	187	176	11	180	171	9	186	176	10
Ca	70	318	3.2	-	307	3.1	-	316	3.2	-
SiO_2	58	186	3.2	-	181	3.1	-	186	3.2	-
Avg cge		—	3.2	-	—	3.1	-	—	3.2	-

SAL 000005332

	mu	calc SO4	Y-1	mu/cy	Δ	Y-2	mu/cy	Δ	Y-3	mu/cy	Δ
Ca	133		83	499	416	87	492	405	84	505	421
SO4	<10		425	<38	>387	409	<37	>372	429	<38	>391
Cl	53		243	199	44/431 -15	236	196	40/412 -7	242	201	41/432
Na	53		224	199	25	221	196	25	227	201	26
CaH	69		253	3.7		250	3.6		257	3.7	
SiO2	49		189	3.8		186	3.8		192	3.9	
Σ cy				3.75			3.7			3.8	
2/26/87											
Mg	145		51	427	376	50	427	377	40	420	380
SO4	<10		369	<30	>339	368	<30	>338	378	<30	>348
Cl	56		200	171	29/368 8	219	171	48/386 -9	211	168	43/391 -
Na	60		190	183	7	189	183	6	186	180	6
CaH	66		200	3.0		197	3.0		194	2.9	
SiO2	54		168	3.1		165	3.1		169	3.1	
Σ cy				3.05			3.05			3.0	
12/30/86											
Mg	135		37	533	496	42	513	471	47	500	453
SO4	<10		450	<40	>410	426	<38	>388	415	<37	>378
Cl	59		273	233	40/450 46	265	224	41/426 42	257	218	39/417 3
Na	53		221	209	12	210	201	9	205	196	9
CaH	63		250	4.0		236	3.7		234	3.7	
SiO2	54		210	3.9		208	3.9		198	3.7	
Σ cy				3.95			3.8			3.7	

LC-3

10'											
M	132	34	528	494		40	488	448		35	502	467
SO_4	<10	528	<40	>488		494	<37	>457		532	<38	>494
Cl	56	277	224	53/541	-47	269	207	62/519	-71	285	213	72/566
Na	51	242	204	38		220	189	31		230	194	36
Cu++	66	275	4.2			249	3.8			254	3.8	
SiO_2	56	212	3.8			204	3.6			214	3.8	
Avg			4.0				3.7				3.8	

SAL 000005334

LC-4

SO4		Cl		Na	
mu	(mu) Added	mu	(mu) Added	mu	(mu) Added
<10	122	56	13	51	10
<10	124	56	17		8
<10	130	56	19		9
<10	104	59	10	53	3
<10	102		11		2
<10	102		11		2
<10	111	56	10	60	2
	111		16		2
	116		14		2
<10	103	53	12	53	7
	101		11		7
	103		11		7
<10	110	64	4	55	3
	110		5		3
	113		5		3
<10	116	63	9	59	2
	115		5		1
	119		8		2
<10	115	68	1	54	6
	109		1		7
	116		0		6
	2352	1257	193	1155	94
<10	112	60	9	55	4.5

SAL 000005335

03146
CONOCO, INC.
LAKE CHAS. REFY-WHSE
RT. 13OLD SPANISH TR
WESTLAKELA7 A

DATE SAMPLED 12/30/86

BETZ REPRESENTATIVE
GOLLA, M. D. 22G

LEGEND AO
CURRENT TEST RESULTS XXX.X
MEDIAN XXX.X XX NUMBER OF PREVIOUS RESULTS

	SAMPLING POINT				
	105 DEG MAKE UP 70107036H	CT Y1 BLOW DWN 70107039H	CT Y2 BLOW DWN 70107041H	CT Y3 BLOW DWN 70107038H	
PH	7.9 7.9 5	7.2 7.2 5	7.3 7.3 5	7.4 7.4 5	
SPECIFIC CONDUCTANCE, 25 DEG C, UMHOS	435. 435. 5	1750. 1800. 5	1710. 1760. 5	1670. 1820. 5	
ALKALINITY, "P" AS CACO3, PPM	0. 0. 5	0. 0. 5	0. 0. 5	0. 0. 5	
ALKALINITY, "M" AS CACO3, PPM	135. 133. 5	37. 34. 5	42. 40. 5	47. 45. 5	
SULFATE AND SULFITE, AS SO4, PPM	L 10. 10. 5	450. 478. 5	426. 466. 5	415. 487. 5	
CHLORIDE, AS CL, PPM	59. 58. 5	273. 277. 5	265. 269. 5	257. 285. 5	
HARDNESS, TOTAL, AS CACO3, PPM	91. 94. 5	365. 374. 5	344. 362. 5	339. 382. 5	
CALCIUM HARDNESS, TOTAL,AS CACO3,PPM	63. 64. 5	250. 259. 5	236. 249. 5	234. 265. 5	
MAGNESIUM HARDNESS, TOTAL, AS CACO3, PPM	28. 28. 5	114. 114. 5	107. 110. 5	104. 115. 5	
COPPER, TOTAL, AS CU, PPM	L .05 .05 5	.15 .13 5	.14 .14 5	.13 .1 5	
IRON, TOTAL, AS FE, PPM	3. 2. 5	8.1 7. 5	7.1 7.1 5	7.6 7.3 5	
SODIUM, AS NA, PPM	53. 53. 5	221. 227. 5	210. 220. 5	205. 230. 5	
PHOSPHATE, TOTAL, AS PO4, PPM	.8 .7 5	19.4 12. 5	18.9 13. 5	18.1 16.3 5	
PHOSPHATE, TOTAL INORGANIC, AS PO4, PPM	.8 .6 5	17.2 12. 5	16.4 12.5 5	15.6 15.5 5	
PHOSPHATE, ORTHO- AS PO4, PPM	.8 .6 5	16.6 11.8 5	16.1 11.7 5	15.5 13.6 5	
SILICA, TOTAL, AS SIO2, PPM	54. 54. 5	210. 221. 5	208. 208. 5	198. 223. 5	
SOLIDS, TOTAL SUSPENDED MG/L		L 10. 13. 4	15. 15. 4	L 10. 13. 4	

BNG 324A 8105

03146
CONOCO, INC.
LAKE CHAS. REFY-WHSE
OLD SPANISH TR
WESTLAKELA7

DATE SAMPLED 2/26/87

BETZ REPRESENTATIVE
GOLLA, M. D. 22G

LEGEND
CURRENT TEST RESULTS XXX.X
MEDIAN XXX.X XX NUMBER OF PREVIOUS RESULTS

CQ

	SAMPLING POINT			
	105 DEG MAKE UP 703061221H	CT Y1 BLOW DWN 703061231H	CT Y2 BLOW DWN 703061241H	CT Y3 BLOW DWN 703061251H
PH	8. 7.9	7.1 7.3 5	7.3 7.4 5	7.2 7.4 5
SPECIFIC CONDUCTANCE, 25 DEG C, UMHOS	438. 435.	1460. 1750. 5	1420. 1710. 5	1450. 1670. 5
ALKALINITY, "P" AS CACO3, PPM	0. 0.	0. 0. 5	0. 0. 5	0. 0. 5
ALKALINITY, "M" AS CACO3, PPM	140. 135.	51. 51. 5	50. 50. 5	40. 45. 5
SULFATE AND SULFITE, AS SO4, PPM	L 10. 10.	369. 450. 5	368. 426. 5	378. 415. 5
CHLORIDE, AS CL, PPM	56. 56.	200. 273. 5	219. 263. 5	211. 257. 5
HARDNESS, TOTAL, AS CACO3, PPM	95. 94.	290. 364. 5	284. 344. 5	281. 339. 5
CALCIUM HARDNESS, TOTAL, AS CACO3, PPM	66. 66.	200. 250. 5	197. 236. 5	194. 234. 5
MAGNESIUM HARDNESS, TOTAL, AS CACO3, PPM	29. 28.	89. 110. 5	87. 107. 5	86. 104. 5
COPPER, TOTAL, AS CU, PPM	L .05 .05	L .05 .13 5	.06 .14 5	.06 .1 5
IRON, TOTAL, AS FE, PPM	1.8 2.	4. 4.8 5	4.6 5. 5	4.7 5.5 5
SODIUM, AS NA, PPM	60. 53.	190. 207. 5	189. 205. 5	186. 205. 5
PHOSPHATE, TOTAL, AS PO4, PPM	.7 .7	20. 19.4 5	20. 18.9 5	21. 18.1 5
PHOSPHATE, TOTAL INORGANIC, AS PO4, PPM	.7 .7	20. 17.2 5	20. 16.4 5	21. 15.6 5
PHOSPHATE, ORTHO- AS PO4, PPM	.7 .7	17.7 16.6 5	17.7 16.1 5	18.2 15.5 5
SILICA, TOTAL, AS SIO2, PPM	54. 54.	168. 210. 5	165. 204. 5	169. 198. 5
SOLIDS, TOTAL SUSPENDED MG/L		L 10. 10. 5	12. 12. 5	L 10. 10. 5

ENG 324A 8105

SAL 000005337

.46
NOCO, INC.
AKE CHAS. REFY-WHSE
OLD SPANISH TR
NESTLAKELA7

DATE SAMPLED 4/20/87

BETZ REPRESENTATIVE
GOLLA, M. D. 22G

LEGEND EL

CURRENT TEST RESULTS XXX.X
MEDIAN XXX.X XX NUMBER OF PREVIOUS RESULTS

	SAMPLING POINT				
	105 DEG MAKE UP 70430204H	CT Y1 BLOW DWN 70430205H	CT Y2 BLOW DWN 70430206H	CT Y3 BLOW DWN 70430207H	
PH	8.3 8. 5	7.6 7.3 5	7.82 7.5 5	7.7 7.4 5	
SPECIFIC CONDUCTANCE, 25 DEG C, UMHOS	448. 438. 5	1740. 1740. 5	1700. 1700. 5	1750. 1670. 5	
ALKALINITY, "P" AS CACO3, PPM	0. 0. 5	0. 0. 5	0. 0. 5	0. 0. 5	
ALKALINITY, "M" AS CACO3, PPM	133. 135. 5	83. 51. 5	87. 50. 5	84. 47. 5	
SULFATE AND SULFITE, AS SO4, PPM	L 10. 10. 5	425. 425. 5	409. 409. 5	429. 415. 5	
CHLORIDE, AS CL, PPM	53. 56. 5	243. 243. 5	236. 236. 5	242. 242. 5	
ARDNESS, TOTAL, CACO3, PPM	98. 95. 5	367. 365. 5	363. 344. 5	373. 339. 5	
CALCIUM HARDNESS, TOTAL, AS CACO3, PPM	69. 66. 5	253. 250. 5	250. 236. 5	257. 234. 5	
MAGNESIUM HARDNESS, TOTAL, AS CACO3, PPM	29. 28. 5	113. 113. 5	111. 107. 5	115. 104. 5	
COPPER, TOTAL, AS CU, PPM	L .05 .05 5	L .05 .13 5	L .05 .14 5	L .05 .1 5	
IRON, TOTAL, S FE, PPM	1.2 1.8 5	6. 6. 5	6.1 6.1 5	6. 6. 5	
SODIUM, AS NA, PPM	53. 53. 5	224. 221. 5	221. 210. 5	227. 205. 5	
PHOSPHATE, TOTAL, AS PO4, PPM	.7 .7 5	31. 19.4 5	29. 18.9 5	30. 18.1 5	
PHOSPHATE, TOTAL INORGANIC, AS PO4, PPM	.7 .7 5	31. 17.2 5	29. 16.4 5	30. 15.6 5	
PHOSPHATE, ORTHO- AS PO4, PPM	.7 .7 5	25. 16.6 5	24. 16.1 5	25. 15.5 5	
SILICA, TOTAL, AS SIO2, PPM	49. 54. 5	189. 189. 5	186. 186. 5	192. 192. 5	
SOLIDS, TOTAL SUSPENDED MG/L		11. 10. 5	13. 12. 5	L 10. 10. 5	

ENG 324A 8105

INC.
HAS. REFY-WHSE
OLD SPANISH TR
LAKELA7

DATE SAMPLED 7/01/87

BETZ REPRESENTATIVE
GOLLA, M. D. 22G

LEGEND G4

CURRENT TEST RESULTS XXX.X
MEDIAN XXX.X XX NUMBER OF PREVIOUS RESULTS

	SAMPLING POINT				
	105 DEG MAKE UP 70707092H	CT Y1 BLOW DWN 70707094H	CT Y2 BLOW DWN 70707095H	CT Y3 BLOW DWN 70707096H	
PH	7.8 8. S	7.6 7.6 S	7.3 7.3 S	6.8 7.4 S	
SPECIFIC CONDUCTANCE, 25 DEG C, UMHOS	457. 438. S	1490. 1490. S	1450. 1450. S	1540. 1540. S	
ALKALINITY, "P" AS CACO3, PPM	0. 0. S	0. 0. S	0. 0. S	0. 0. S	
ALKALINITY, "M" AS CACO3, PPM	132. 133. S	37. 51. S	39. 50. S	41. 47. S	
SULFATE AND SULFITE, AS SO4, PPM	L 10. 10. S	383. 383. S	371. 371. S	392. 392. S	
CHLORIDE, AS CL, PPM	64. 56. S	218. 218. S	214. 219. S	220. 220. S	
HARDNESS, TOTAL, S CACO3, PPM	98. 95. S	318. 318. S	307. 307. S	316. 316. S	
CALCIUM HARDNESS, TOTAL, AS CACO3, PPM	69. 66. S	224. 224. S	216. 216. S	223. 223. S	
MAGNESIUM HARDNESS, TOTAL, AS CACO3, PPM	28. 28. S	93. 93. S	90. 90. S	92. 92. S	
COPPER, TOTAL, AS CU, PPM	L .05 .05 S	L .05 .05 S	L .05 .06 S	L .05 .06 S	
IRON, TOTAL, AS FE, PPM	1.2 1.8 S	3.5 4. S	3.3 4.6 S	3.2 4.7 S	
SODIUM, AS NA, PPM	55. 53. S	185. 190. S	180. 189. S	186. 186. S	
PHOSPHATE, TOTAL, AS PO4, PPM	.7 .7 S	16.3 19.4 S	16.3 18.9 S	20. 20. S	
PHOSPHATE, TOTAL INORGANIC, AS PO4, PPM	.7 .7 S	16.3 17.2 S	16.3 16.4 S	20. 20. S	
PHOSPHATE, ORTHO- AS PO4, PPM	.6 .7 S	14.2 16.6 S	13.5 16.1 S	17.2 17.2 S	
SILICA, TOTAL, AS SIO2, PPM	58. 54. S	186. 186. S	181. 181. S	186. 186. S	
SOLIDS, TOTAL SUSPENDED MG/L		L 10. 10. S	10. 12. S	10. 10. S	

G 324A 8701

ENERGY MANAGEMENT SERVICES

C.
S. REFY-WHSE
LD SPANISH TR
KELA7

DATE SAMPLED 8/20/87

BETZ REPRESENTATIVE
GOLLA, M. D. 22G

LEGEND
CURRENT TEST RESULTS XXX.X
MEDIAN XXX.X XX NUMBER OF PREVIOUS RESULTS

11

	SAMPLING POINT			
	105 DEG MAKE UP 70826033H	CT Y1 BLOW DWN 70826034H	CT Y2 BLOW DWN 70826035H	CT Y3 BLOW DWN 70826036H
PH	8.2 8. 5	7.8 7.6 5	7.8 7.8 5	7.8 7.7 5
SPECIFIC CONDUCTANCE, 25 DEG C, UMHOS	444. 444. 5	1630. 1490. 5	1590. 1450. 5	1640. 1540. 5
ALKALINITY, "P" AS CACO3, PPM	0. 0. 5	0. 0. 5	0. 0. 5	0. 0. 5
ALKALINITY, "M" AS CACO3, PPM	130. 133. 5	59. 59. 5	58. 58. 5	55. 55. 5
SULFATE AND SULFITE, AS SO4, PPM	L 10. 10. 5	449. 383. 5	443. 371. 5	463. 392. 5
CHLORIDE, AS CL, PPM	63. 59. 5	255. 218. 5	243. 219. 5	255. 220. 5
HARDNESS, TOTAL, AS CACO3, PPM	104. 98. 5	383. 318. 5	380. 307. 5	395. 316. 5
LCIUM HARDNESS, TOTAL, AS CACO3, PPM	71. 69. 5	267. 224. 5	265. 216. 5	277. 223. 5
MAGNESIUM HARDNESS, TOTAL, AS CACO3, PPM	30. 29. 5	115. 93. 5	113. 90. 5	117. 92. 5
COPPER, TOTAL, AS CU, PPM	.22 .05 5	L .05 .05 5	L .05 .05 5	L .05 .05 5
IRON, TOTAL, AS FE, PPM	2.1 1.8 5	4.5 4. 5	4.5 4.5 5	5. 4.7 5
SODIUM, AS NA, PPM	59. 55. 5	216. 190. 5	211. 189. 5	219. 186. 5
ZINC, TOTAL, AS ZN, PPM		.25	.25	.28
PHOSPHATE, TOTAL, AS PO4, PPM	.8 .7 5	15.2 16.3 5	15. 16.3 5	15.6 20. 5
PHOSPHATE, TOTAL INORGANIC, AS PO4, PPM	.8 .7 5	14.7 16.3 5	14.2 16.3 5	15.1 20. 5
PHOSPHATE, ORTHO- AS PO4, PPM	.6 .7 5	11.6 14.2 5	11.8 13.5 5	12.6 17.2 5
SILICA, TOTAL, AS SIO2, PPM	56. 54. 5	198. 186. 5	194. 181. 5	198. 186. 5
SOLIDS, TOTAL SUSPENDED MG/L		L 10. 10. 5	11. 11. 5	11. 10. 5

ENG 324A 8105

SAL 000005340

Betz Industrial
A Management Division of Betz Laboratories, Inc

146 DATE SAMPLED 10/16/87 KM.

:ONOCO INC.
.AKE CHAS. REFY-WHSE
OLD SPANISH TR
VESTLAKELA7

BETZ REPRESENTATIVE
GOLLA, M. D./TERM. 22G

LEGEND
CURRENT TEST RESULTS XXX.X
MEDIAN XXX.X XX NUMBER OF PREVIOUS RESULTS

	SAMPLING POINT				
	105 DEG MAKE UP 71021072H	CT Y1 BLOW DWN 71021077H	CT Y2 BLOW DWN 71021075H	CT Y3 BLOW DWN 71021074H	
I	7.9 8. S	5.4 7.6 S	6.1 7.3 S	7. 7.2 S	
'ECIFIC CONDUCTANCE, DEG C, UMHOS	434. 444. S	1490. 1490. S	1480. 1480. S	1570. 1570. S	
.KALINITY, "P" CACO3, PPM	0. 0. S	0. 0. S	0. 0. S	0. 0. S	
.KALINITY, "M" CACO3, PPM	134. 133. S	54. 54. S	67. 58. S	40. 41. S	
LFATE AND SULFITE, SO4, PPM	L 10. 10. S	425. 425. S	393. 393. S	435. 429. S	
LORIDE, AS CL, PPM	68. 63. S	234. 234. S	226. 226. S	234. 234. S	
RDNESS, TOTAL, CACO3, PPM	104. 98. S	365. 365. S	355. 355. S	366. 366. S	
IUM HARDNESS, TAL,AS CACO3,PPM	74. 69. S	261. 253. S	253. 250. S	261. 257. S	
GNESIUM HARDNESS, TAL, AS CACO3, PPM	29. 29. S	103. 103. S	100. 100. S	103. 103. S	
PPER, TOTAL, CU, PPM	L .05 .05 S	L .05 .05 S	L .05 .05 S	L .05 .05 S	
ON, TOTAL, FE, PPM	1.3 1.3 S	5.4 4.5 S	3.9 4.5 S	5.1 5. S	
DIUM, AS NA, PPM	54. 55. S	204. 204. S	201. 201. S	207. 207. S	
OSPHATE, TOTAL, PO4, PPM	.8 .7 S	13.5 16.3 S	13.4 16.3 S	14.9 20. S	
OSPHATE, TOTAL ORGANIC, AS PO4, PPM	.8 .7 S	13.5 16.3 S	13.4 16.3 S	14.9 20. S	
OSPHATE, ORTHO- PO4, PPM	.7 .7 S	13.1 14.2 S	12.7 13.5 S	13.8 17.2 S	
LICA, TOTAL, SIO2, PPM	55. 55. S	182. 186. S	178. 181. S	185. 186. S	
LIDS, TOTAL SUSPENDED /L		18. 10. S	19. 12. S	14. 10. S	

:4A 8701

146
CONOCO, INC.
LAKE CHAS. REFY-WHSE
OLD SPANISH TRAIL
WESTLAKE LA 70669

DATE SAMPLED 10/03/86

BETZ REPRESENTATIVE

GOLLA, M. D. 22G

LEGEND KR

CURRENT TEST RESULTS XXXX

MEDIAN XXXX XX NUMBER OF PREVIOUS RESULTS

	SAMPLING POINT					
	CT Y1 BLOW DWN 61106112H	CT Y2 BLOW DWN 61106114H	CT Y3 BLOW DWN 61106111H			
I	7.3 7.2 5	7.5 6.8 5	7.4 7.3 5			
ECIFIC CONDUCTANCE, DEG C, UMHOS	1800. 1800. 5	1760. 1770. 5	1820. 1840. 5			
KALINITY, "P" CACO3, PPM	0. 0. 5	0. 0. 5	0. 0. 5			
KALINITY, "M" CACO3, PPM	34. 31. 5	40. 30. 5	35. 35. 5			
LFATE AND SULFITE, SO4, PPM	528. 478. 5	494. 466. 5	532. 487. 5			
LORIDE, AS CL, PPM	277. 313. 5	269. 285. 5	285. 288. 5			
RDNESS, TOTAL, CACO3, PPM	398. 374. 5	362. 363. 5	370. 412. 5			
IUM HARDNESS, AL,AS CACO3,PPM	275. 259. 5	249. 249. 5	254. 282. 5			
GNESIUM HARDNESS, TAL, AS CACO3, PPM	122. 114. 5	112. 112. 5	115. 128. 5			
PER, TOTAL, CU, PPM	.13 .13 5	.24 .14 5	.1 .1 5			
N, TOTAL, FE, PPM	7.9 7. 5	74. 7.2 5	7.4 7.3 5			
IUM, AS NA, PPM	242. 230. 5	220. 226. 5	230. 242. 5			
SPHATE, TOTAL, PO4, PPM	7.5 12. 5	7.2 13. 5	7.4 16.3 5			
SPHATE, TOTAL RGANIC, AS PO4, PPM	6.9 12. 5	6.7 12.5 5	6.9 15.5 5			
SPHATE, ORTHO- PO4, PPM	5.7 11.8 5	5.6 11.7 5	5.8 13.6 5			
ICA, TOTAL, SIO2, PPM	212. 221. 5	204. 207. 5	214. 227. 5			
IDS, TOTAL SUSPENDED L	11. 17. 4	L 10. 20. 4	L 10. 20. 4			
[illegible]	[illegible]	[illegible]	[illegible]			

24A 8105

MANAGEMENT SERVICES

33146 CONOCO, INC. LAKE CHAS. REFY-WHSE OLD SPANISH TRAIL WESTLAKE LA 70669	DATE SAMPLED 10/03/86 BETZ REPRESENTATIVE GOLLA, M. D. 22G	LEGEND KX CURRENT TEST RESULTS XXX.X MEDIAN XXX.X XX (NUMBER OF PREVIOUS RESULTS)

	SAMPLING POINT					
	105 DEG MAKE UP 61112056H					
PH	8. 7.9 5					
SPECIFIC CONDUCTANCE, 25 DEG C, UMHOS	418. 442. 5					
ALKALINITY, "P" AS CACO3, PPM	0. 0. 5					
ALKALINITY, "M" AS CACO3, PPM	132. 132. 5					
SULFATE AND SULFITE, AS SO4, PPM	L 10. 10. 5					
CHLORIDE, AS CL, PPM	56. 56. 5					
HARDNESS, TOTAL, AS CACO3, PPM	94. 94. 5					
CALCIUM HARDNESS, TOTAL,AS CACO3,PPM	66. 64. 5					
MAGNESIUM HARDNESS, TOTAL, AS CACO3, PPM	28. 28. 5					
COPPER, TOTAL, AS CU, PPM	L .05 .05 5					
IRON, TOTAL, AS FE, PPM	2. 1.6 5					
SODIUM, AS NA, PPM	51. 53. 5					
PHOSPHATE, TOTAL, AS PO4, PPM	.7 .6 5					
PHOSPHATE, TOTAL ORGANIC, AS PO4, PPM	.6 .6 5					
PHOSPHATE, ORTHO-PO4, PPM	.6 .6 5					
SILICA, TOTAL, SIO2, PPM	56. 53. 5					

324A 8105

1987 SARA 313 REPORT
RELEASE INVENTORY
LAKE CHARLES REFINERY

STYRENE

SOURCE	AMOUNT RELEASED (lb/yr)	% OF TOTAL RELEASE (to Nearest M)
AIR POINT RELEASES		
Storage Tanks		
Floating Roof	19.	1
Fixed Roof	0.	0
Total Point Release	19. (<499)	1
AIR NON-POINT RELEASES		
Loading Loss	9.	0
Fugitive Equipment Loss		
Regular Coker	10.	0
Premium Coker	34.	2
No. 2 Coker	62.	3
Gas Recovery Plant	386.	19
FCC	144.	7
Thermal Cracker	32.	2
Tank Farm/Blending	1240.	60
Seperators		
API	0.	0
DAF	2.	0
IAF	1.	0
Cooling Tower	30.	2
Wastewater Release to Air	84.	4
Waste Release to Air	9.	0
Total Non-point Release	2043. (2000)	99
TOTAL AIR RELEASE	2062.	100
WATER RELEASE	37. (<499)	
LAND RELEASE		
On-Site (Landfarm)	0.	
Off-Site (Landfill)	N/A	
TOTAL LAND RELEASE	0.	

SAL 000005344

1987 SARA 313 REPORT
WASTE TREATMENT METHODS AND EFFICIENCY
LAKE CHARLES REFINERY

STYRENE

GENERAL WASTESTREAM	TREATMENT METHOD	TREATMENT EFFICIENCY	RANGE OF INFLUENT CONCENTRATION
GASEOUS	VAPOR RECOVERY UNIT	98%(a)	0.01-1%(a)
WASTEWATER	BIOLOGICAL TREATMENT (AEROBIC)	90%(b)	1 ppb-1 ppm(c)
SOLID WASTE	BIOLOGICAL TREATMENT (AEROBIC)	100%(d)	-100 ppm(e)

(a) Based on data provided by Brandt Butler.

(b) See Table A-2 in Wastewater Appendix.

(c) Chemical was not detected, so one-half the detection limit (D.L.= 10 ppb) was assumed (based on 1977 R&D Lake Charles wastewater analysis, Technical Memorandum No. 603-79-350-2, and EPA Guidance Document).

(d) Assumption based on data for similar organic compounds (see "Estimating Land Treatment Air Emissions" in Solid Waste Data Appendix).

(e) See Waste Composition Data in Solid Waste Data Appendix

STYRENE COMPOSITIONS

	WT%
BLENDED GASOLINES - UL, REG, SUL	1.0
BASE GASOLINE	1.0
FCC GASOLINE	1.0
SLOP GASOLINE	1.0
COKER GASOLINE	1.0

SEE APPENDIX E FOR COMPOSITION DATA

STYRENE CALCULATIONS

STORAGE TANKS

FLOATING ROOF = $(32.1 \text{ TPY} + 1.7 \text{ TPY} + 28.2 \text{ TPY})\left(\frac{1.0}{100}\right)\left(\frac{.0967}{6.2}\right)(2000)$
= 19 LB/YR

LOADING LOSS = $(10.62 \text{ TPY} + 19.55 \text{ TPY})\left(\frac{1}{100}\right)\left(\frac{.0967}{6.2}\right)(2000) =$ 9 LB/YR

FUGITIVE EQUIPMENT = (SEE APPENDIX I)

SEPARATORS - DAF = $(13.2 \text{ TPY})\left(\frac{0.3}{100}\right)\left(\frac{.0967}{3.4}\right)(2000) =$ 2 LB/YR

COOLING TOWER = $(29.9 \text{ TPY})\left(\frac{0.05}{100}\right)(2000) =$ 30 LB/YR

WASTEWATER

(No DATA ½ D.L for others)

EFFLUENT = 7.31×10^9 LB/YR $\times \frac{5 \text{ LB}}{10^9 \text{ LB}} =$ 37 LB/YR

TO AIR = $\frac{36.6 \text{ LB/YR}}{0.10} \times .23 =$ 84 LB/YR

WASTE RELEASE

TOTAL RELEASE TO LANDFARM = $(1112 \text{ TPY})\left(\frac{12.2}{10^6}\right)(2000) =$ 27 LB/YR

RELEASE TO AIR = $(27 \text{ LB/YR})(.333) =$ 9 LB/YR

RELEASE TO LAND = 0 (Degraded Completely)

NOTE: SEE APPENDICES FOR CALCULATION BACKGROUND INFORMATION

Conoco Inc.
Calculation Sheet

Made By
Checked By
Date
Page of
Title
Job No.
Field
State

SAL 000005347

1987 SARA 313 REPORT
RELEASE INVENTORY
LAKE CHARLES REFINERY

SULFURIC ACID

SOURCE	AMOUNT RELEASED (lb/yr)
AIR POINT RELEASES	
Acid Plant Demister	420.
Total Point Release	420. (<499)
AIR NON-POINT RELEASES	
Loading Loss	0.
Alkylation, S.A. Plant, & Cooling Tower Neut.	<499.
Total Non-point Release	<499.
TOTAL AIR RELEASES	420.+
WATER RELEASE	0.
LAND RELEASE	N/A

1987 SARA 313 REPORT
WASTE TREATMENT METHODS AND EFFICIENCY
LAKE CHARLES REFINERY

SULFURIC ACID

GENERAL WASTESTREAM	TREATMENT METHOD	TREATMENT EFFICIENCY	RANGE OF INFLUENT CONCENTRATION
WASTEWATER	NEUTRALIZATION	100%(a)	>1%(a)

(a) Based on data provided by Brandt Butler.

SULFURIC ACID

LAKE CHARLES

AIR

VP = 1.78×10^{-6} PSIA (98 WT % @ 20°C)(1)

POINT RELEASE = THROUGHPUT LOADING = STORAGE = 0

LOADING = 11,300 BBL, PRODUCT = 67,700 BBL; @ 1.8 SG ⇒ 42.7 MM

ACID PLANT DEMIST. $\frac{0.02 \text{ LB}}{\text{TON}} \times 21,350$ TONS × .98 (Fraction H_2SO_4)

= 420 LB

NON-POINT RELEASE: FUGITIVES – SOCMI FACTORS DON'T FIT HEAVY INORGANICS

= <499 (EJ MANCINI, SULF. ACID PLANT, DUPONT FT HILL, OH.; REPORTING <499 FOR ENTIRE PLANT; NO GOOD METH

BASIS = ENGR. CALCULATIONS / JUDGEMENT

WATER

WATER RELEASE = 0

BASIS = pH MONITORING – 6 to 9

TREATMENT: NEUTRALIZATION, 100% EFFICIENCY, INFLUENT CONCENTRATION = >1%

LAND

LAND RELEASE = N/A

NOTES: (1) PERRY'S CHEMICAL ENGINEERS HANDBOOK

Conoco Inc.
Calculation Sheet

Made By
Checked By
Date
Page of
Title
Job No.
Field
State

SAL 000005350

A1:

VOC EMISSION CALCULATIONS
TRUCK RACK LOADING LOSS

DATE	=	04-May-88
TIME PERIOD : MONTH,YR START	=	JAN 87
: MONTH,YR END	=	DEC 87
LOCATION	=	LAKE CHARLES
POINT SOURCE I.D. #	=	SULF. ACID LOADING
MATERIAL HANDLED	=	SULF. ACID
THROUGHPUT (bbls)	=	11314
VRU EFFICIENCY (%)	=	0

LOADING LOSS

[ALT] A	MOLECULAR WEIGHT	Mv =	98
[ALT] B	TEMPERATURE (F)	T =	70

04-May-88 03:39 AM Cap

A34: SHEET

LOADING LOSS

[ALT] A	MOLECULAR WEIGHT	Mv =	99
[ALT] B	TEMPERATURE (F)	T =	70
[ALT] C	VAPOR PRESSURE (psia)	P =	0.00000178
[ALT] D	SATURATION FACTOR	S =	1.45

UNCONTROLLED EMISSIONS (lb) L1 = 0

CONTROLLED EMISSIONS (lb) L1 = L1*(1-eff/100)
= 0

[ALT] Z TO PRINT AND/OR SAVE

04-May-88 03:39 AM Cap

A1: SHEET

VOC EMISSION CALCULATIONS
FIXED ROOF

SAL 000005351

TIME PERIOD : MONTH,YR START	=	JAN, 88
: MONTH,YR END	=	DEC, 88
LOCATION	=	LAKE CHARLES
POINT SOURCE I.D. #	=	SULF. ACID STORAGE
MATERIAL STORED	=	SPENT ACID
TANK CAPACITY (bbls)	=	2000
THRUPUT (bbls/yr)	=	17019

BREATHING LOSS

TANK DIAMETER (ft)	D =	25
TANK HEIGHT (ft)	H =	24
[ALT] A VAPOR SPACE HEIGHT (ft)	h =	12

04-May-88 03:47 AM Cap

A31: SHEET

BREATHING LOSS

TANK DIAMETER (ft)	D =	25
TANK HEIGHT (ft)	H =	24
[ALT] A VAPOR SPACE HEIGHT (ft)	h =	12
[ALT] B DAILY TEMP CHANGE (F)	dT =	20
[ALT] C MOLECULAR WEIGHT	Mv =	98
[ALT] D VAPOR PRESSURE (psia)	Pv =	0.00000178
[ALT] E PRESSURE (psia)	Pa =	14.7
[ALT] F PRODUCT FACTOR	Kc =	1
[ALT] G PAINT FACTOR	Fp =	1
[ALT] H SMALL TANK FACTOR	C =	1
BREATHING LOSS (lbs)	Lb =	0

WORKING LOSS

04-May-88 03:47 AM Cap

A49: SHEET

WORKING LOSS

MOLECULAR WEIGHT	Mv =	98
VAPOR PRESSURE	Pv =	0.00000178
# OF TURNOVERS PER YEAR	N =	5.657
TANK CAPACITY (gal)	V =	84000
[ALT] I TURNOVER FACTOR	Kn =	
PRODUCT FACTOR	Kc =	1
WORKING LOSS (lbs)	Lw =	0
TOTAL LOSS (lbs)	Lt = Lb + Lw	
	=	0

SAL 000005352

1987 SARA 313 REPORT
RELEASE INVENTORY
LAKE CHARLES REFINERY

TOLUENE

SOURCE	AMOUNT RELEASED (lb/yr)		% OF TOTAL RELEASE TO MEDIUM
AIR POINT RELEASES			
Storage Tanks			
Floating Roof	607.		2
Fixed Roof	1265.		5
Total Point Release	1872.	(1900)	7
AIR NON-POINT RELEASES			
Loading Loss	1134.		4
Fugitive Equipment Loss			
No. 3 CTU	360.		1
No. 4 HDS	240.		1
No. 3 CRU & HDS	2600.		9
Regular Coker	63.		0
Premium Coker	138.		1
No. 2 Coker	428.		2
Gas Recovery Plant	1540.		6
No. 5 HDS	112.		0
No. 2 Crude Unit	360.		1
FCC	636.		2
Lt Gasp Spltr	714.		3
No. 1 HDS	196.		1
No. 2 CRU & HDS	5080.		18
Thermal Cracker	126.		0
MHC	674.		2
Tank Farm/Blending	10420.		37
Process Drains	534.		2
Separators			
API	73.		0
DAF	9.		0
IAF	4.		0
Cooling Tower	480.		2
Wastewater Release to Air	84.		0
Waste Release to Air	151.		1
Total Non-point Release	26156.	(26000)	93
TOTAL AIR RELEASE	28029.		100
WATER RELEASE	37.	(<499)	
LAND RELEASE			
On-Site (Landfarm)	0.		
Off-Site (Landfill)	N/A		
TOTAL LAND RELEASE	0.		

SAL 000005353

1987 SARA 313 REPORT
WASTE TREATMENT METHODS AND EFFICIENCY
LAKE CHARLES REFINERY

TOLUENE

GENERAL WASTESTREAM	TREATMENT METHOD	TREATMENT EFFICIENCY	RANGE OF INFLUENT CONCENTRATION
GASEOUS	VAPOR RECOVERY UNIT	98%(a)	0.01-14(a)
WASTEWATER	BIOLOGICAL TREATMENT (AEROBIC)	90%(b)	1 ppb-1 ppm(c)
SOLID WASTE	BIOLOGICAL TREATMENT (AEROBIC)	100%(d)	1-100 ppm(e)

(a) Based on data provided by Brandt Butler.

(b) See Table A-2 in Wastewater Appendix.

(c) Chemical was not detected, so one-half the detection limit (D.L.= 10 ppb) was assumed (based on 1977 R&D Lake Charles wastewater analysis, Technical Memorandum No. 603-79-350-2, and EPA Guidance Document).

(d) See "Estimating Land Treatment Air Emissions" in Solid Waste Data Appendix.

(e) See Waste Composition Data in Solid Waste Data Appendix

TOLUENE COMPOSITIONS

	WT %
BLENDED GASOLINES - REG, UL, SUL	7.9
FCC GASOLINE	4.4
REFORMATE	15.0
LSR GASOLINE	3.0
ALKYLATE, CRUDE	< 1.0
NAPHTHA	4.5
JP-4	1.5
COKER GASOLINE	4.0

SEE APPENDIX E FOR COMPOSITION DATA

Conoco Inc.
Calculation Sheet

Made By
Checked By
Date
Page of
Title
Job No.
Field
State

SAL 000005355

TOLUENE CALCULATIONS

STORAGE TANKS

FLOATING ROOF = $\left[(32.1\ TPY)\left(\frac{7.0}{100}\right) + (1.7\ TPY)\left(\frac{7.9}{100}\right) + (28.2\ TPY)\left(\frac{7.2}{100}\right)\right]\left(\frac{0}{6}\right.$

$\times\ 2000 = \underline{607\ LB/YR}$

FIXED ROOF = $(56.22\ TPY)\left(\frac{4.5}{100}\right)\left(\frac{0.4}{1.6}\right)(2000) = \underline{1265\ LB/YR}$

LOADING LOSS = $\left[(10.62 + 19.55\ TPY)\left(\frac{7.9}{100}\right)\left(\frac{0.4}{6.2}\right) + (42.73\ TPY)\left(\frac{15}{100}\right)\left(\frac{0.4}{6.2}\right)\right.$

$\times\ 2000 = \underline{1134\ LB/YR}$

EQUIPMENT FUGITIVES – SEE APPENDIX I

PROCESS DRAINS = $(286.9\ TPY)\left(\frac{0.79}{100}\right)\left(\frac{.4}{3.4}\right)(2000) = \underline{534\ LB/YR}$

API SEPARATOR = $(39.42\ TPY)\left(\frac{0.79}{100}\right)\left(\frac{0.4}{3.4}\right)(2000) = \underline{73\ LB/YR}$

COOLING TOWER = $(29.9\ TPY)\left(\frac{0.79}{100}\right)(2000) = \underline{480\ LB/YR}$

WASTEWATER:

EFFLUENT = $7.31 \times 10^9\ LB/YR \times \frac{5\ LB}{10^9\ LB} = 36.6\ LB/YR = \underline{37\ LB/YR}$

TO AIR = $\frac{36.6\ LB/YR}{0.10} \times 0.23 = \underline{84\ LB/YR}$

WASTE RELEASE:

TOTAL RELEASE TO LAND = $\left[(14{,}650\ TPY)\left(\frac{0.706}{10^6}\right) + (1112\ TPY)\left(\frac{128}{10^6}\right)\right](2000$

$= 305.4\ LB/YR$

RELEASE TO AIR = $(305.4\ LB/YR)(0.494) = \underline{151\ LB/YR}$

RELEASE TO LAND = 0 (DEGRADED)

NOTE: SEE APPENDICES FOR CALCULATION BACKGROUND INFORMATION

Made By
Checked By
Date
Page of

Conoco Inc.
Calculation Sheet

Title

Job No.
Field
State

SAL 000005356

1987 SARA 313 REPORT
RELEASE INVENTORY
LAKE CHARLES REFINERY

1,1,1-TRICHLOROETHANE

SOURCE	AMOUNT RELEASED (lb/yr)	% OF TOTAL RELEASE TO MEDIUM
AIR POINT RELEASES	N/A	N/A
AIR NON-POINT RELEASES		
Loading Loss	0.	0
Fugitive Equipment Loss		
Reformer Cat Chlor.	1920.	78
Wastewater Release to Air	547.	22
Total Non-point Release	2467. (2500)	100
TOTAL AIR RELEASE	2467.	100
WATER RELEASE	36. (<499)	
LAND RELEASE		
On-Site (Landfarm)	0.	
Off-Site (Landfill)	N/A	
TOTAL LAND RELEASE	0.	

SAL 000005357

1987 SARA 313 REPORT
WASTE TREATMENT METHODS AND EFFICIENCY
LAKE CHARLES REFINERY

1,1,1-TRICHLOROETHANE

GENERAL WASTESTREAM	TREATMENT METHOD	TREATMENT EFFICIENCY	RANGE OF INFLUENT CONCENTRATION
WASTEWATER	BIOLOGICAL TREATMENT (AEROBIC)	95%(a)	1 ppb-1 ppm(b)
SOLID WASTE	BIOLOGICAL TREATMENT (AEROBIC)	100%(c)	1-100 ppm(d)

(a) Assumption based on data for similar organic compounds (see Table A-2 in Wastewater Appendix).

(b) Chemical was not detected, so one-half the detection limit (D.L.= 10 ppb) was assumed (based on 1977 R&D Lake Charles wastewater analysis, Technical Memorandum No. 603-79-350-2, and EPA Guidance Document).

(c) Assumption based on data for similar organic compounds (see "Estimating Land Treatment Air Emissions" in Solid Waste Data Appendix).

(d) Based on Ponca City Solid Waste Composition Data.

1,1,1 TRICHLOROETHANE

LAKE CHARLES

AIR

BPT = 74.1 °C ; VP = 126 mm Hg (1)

POINT RELEASE = N/A

NON-POINT RELEASE FUGITIVES ⇒ 1 PUMP

REFORMER CAT CHLORINATION = 960 LB × 2 REFS = 1920 LB

WASTEWATER FF RELEASE (SEE CALC) = $\frac{3.6}{.05}$ (N.D.) × .76 = 547 LB MAX

(USED 12,000 LB/YR)

TOTAL NON-POINT RELEASE = 2474 LB

BASIS = ENGINEERING JUDGEMENT / CALCULATIONS

WATER

(N.D.) WATER RELEASE = $7.26 \times 10^9 \times \frac{52}{10^9}$ (±0.1) = 36 LB

BASIS = ENGINEERING CALCULATIONS

TREATMENT = BIOLOGICAL (AEROBIC), 95% EFFICIENT, INFLUENT CONCENTRATION = 1 PPB - 1 PPM

LAND

(N.D.) – MAX DET ⇒ (MEK) = 30 LB

FROM WW = $\frac{36}{.05} \times .01$ = 7 LB

LAND RELEASE (ON-SITE, LAND FARM) = 0 (DEGRADED COMPLETELY)

BASIS = ENGINEERING CALCULATIONS / JUDGEMENT

TREATMENT = BIOLOGICAL (AEROBIC), 100% EFFICIENT, INFLUENT CONCENTRATION = 1-100 PPM

NOTES. (1) PROPERTIES FROM EPA GUIDANCE DOCUMENT

Conoco Inc
Calculation Sheet

Made By
Checked By
Date
Page

Title

Job No.
Field
State

SAL 000005359

1987 SARA 313 REPORT
RELEASE INVENTORY
LAKE CHARLES REFINERY

1,2,4-TRIMETHYLBENZENE

SOURCE	AMOUNT RELEASED (lb/yr)	% OF TOTAL RELEASE TO ATMOSPHERE
AIR POINT RELEASES		
Storage Tanks		
Floating Roof	12.	0
Fixed Roof	0.	0
Total Point Release	12. (<499)	0
AIR NON-POINT RELEASES		
Loading Loss	13.	0
Fugitive Equipment Loss		
No. 3 CRU & HDS	134.	3
Regular Coker	30.	1
Premium Coker	104.	2
No. 2 Coker	184.	4
Gas Recovery Plant	1158.	25
FCC	144.	3
No. 2 CRU & HDS	252.	5
Thermal Cracker	94.	2
Tank Farm/Blending	2480.	53
Process Drains	8.	0
Separators		
API	1.	0
DAF	1.	0
IAF	0.	0
Cooling Tower	72.	2
Wastewater Release to Air	0.	0
Waste Release to Air	0.	0
Total Non-point Release	4675. (4700)	100
TOTAL AIR RELEASE	4687.	100
WATER RELEASE	0. (<499)	
LAND RELEASE		
On-Site (Landfarm)	0.	
Off-Site (Landfill)	N/A	
TOTAL LAND RELEASE	0.	

SAL 000005360

(see "Estimating Land Treatment Air Emissions" in Solid Waste Data Appendix).

(e) Assumption based on data for similar organic compounds (see Waste Composition Data in Solid Waste Data Appendix).

SAL 000005361

PSEUDO - CUMENE COMPOSITIONS
(1,2,4- TRIMETHYLBENZENE)

	WT%
GASOLINES - UL, REG, BASE, SLOP, SUL	2.0
FCC GASOLINE	1.0
REFORMATE	1.0
CONDENSATE	1.0
COKER GASOLINE	3.0

SEE APPENDIX E FOR COMPOSITION BACKGROUND INFORMATION

Made By
Checked By
Date
Page of

Title

Conoco Inc.
Calculation Sheet

Job No.
Field
State

SAL 000005362

1,2,4- TRIMETHYLBENZENE CALCULATIONS
(PSEUDO-CUMENE)

STORAGE TANKS

FLOATING ROOF = $\left[(32.1\ TPY)(.01) + (1.7\ TPY)(.01) + (28.2\ TPY)(.02)\right]\left(\frac{.0393}{6.2}\right)$

$\times 2000 = \underline{12\ LB/YR}$

LOADING LOSS = $\left[(10.62\ TPY)(.02) + (42.73\ TPY)(.01) + (19.55\ TPY)(.02)\right]$

$\times \left(\frac{.0393}{6.2}\right) \times 2000 = \underline{13\ LB/YR}$

EQUIPMENT FUGITIVES - (SEE APPENDIX I)

PROCESS DRAINS = $(286.9\ TPY)\left(\frac{0.12}{100}\right)\left(\frac{.0393}{3.4}\right)(2000) = \underline{8\ LB/YR}$

API SEPARATOR = $(39.42\ TPY)\left(\frac{0.12}{100}\right)\left(\frac{.0393}{3.4}\right)(2000) = \underline{1\ LB/YR}$

COOLING TOWER = $(29.9\ TPY)\left(\frac{0.12}{100}\right)(2000) = \underline{72\ LB/YR}$

WASTEWATER:

EFFLUENT = 0

RELEASE TO AIR = 0

WASTE:

NO DATA AVAILABLE ON PSEUDO CUMENE; ASSUMED SOME IS POTENTIALLY PRESENT AT SMALL CONCENTRATIONS. QUANTITY TO LANDFARM IS DEGRADED, LOSSES TO AIR ARE ASSUMED NEGLIGIBLE.

NOTE: SEE APPENDICES FOR DETAILS ON CALCULATIONS

1987 SARA 313 REPORT
RELEASE INVENTORY
LAKE CHARLES REFINERY

XYLENES

SOURCE	AMOUNT RELEASED (lb/yr)	% OF TOTAL RELEASE TO MEDIUM
AIR POINT RELEASES		
Storage Tanks		
Floating Roof	308.	1
Fixed Roof	534.	2
Total Point Release	842. (<999.)	3
AIR NON-POINT RELEASES		
Loading Loss	514.	2
Fugitive Equipment Loss		
No. 3 CTU	280.	1
No. 4 HDS	120.	1
No. 3 CRU & HDS	2410.	10
Regular Coker	46.	0
Premium Coker	86.	0
No. 2 Coker	154.	1
Gas Recovery Plant	966.	4
No. 2 Crude Unit	278.	1
FCC	1288.	5
LT Gasoline Splitter	120.	1
No. 1 HDS	232.	1
No. 2 CRU & HDS	4528.	19
Thermal Cracker	80.	0
Tank Farm/Blending	10500.	44
Process Drains	330.	1
Separators		
API	46.	0
DAF	4.	0
IAF	2.	0
Cooling Tower	616.	3
Wastewater Release to Air	176.	1
Waste Release to Air	161.	1
Total Non-point Release	22937. (24000)	97
TOTAL AIR RELEASE	23779.	100
WATER RELEASE	37. (<499)	
LAND RELEASE		
On-Site (Landfarm)	0.	
Off-Site (Landfill)	N/A	
TOTAL LAND RELEASE	0.	

SAL 000005364

1987 SARA 313 REPORT
WASTE TREATMENT METHODS AND EFFICIENCY
LAKE CHARLES REFINERY

XYLENES

GENERAL WASTESTREAM	TREATMENT METHOD	TREATMENT EFFICIENCY	RANGE OF INFLUENT CONCENTRATION
GASEOUS	VAPOR RECOVERY UNIT	98%(a)	0.01-1%(a)
WASTEWATER	BIOLOGICAL TREATMENT (AEROBIC)	95%(b)	1 ppb-1 ppm(c)
SOLID WASTE	BIOLOGICAL TREATMENT (AEROBIC)	100%(d)	1-100 ppm(e)

(a) Based on data provided by Brandt Butler.

(b) See Table A-2 in Wastewater Appendix.

(c) Chemical was not detected, so one-half the detection limit (D.L.= 10 ppb) was assumed (based on 1977 R&D Lake Charles wastewater analysis, Technical Memorandum No. 603-79-350-2, and EPA Guidance Document).

(d) See "Estimating Land Treatment Air Emissions" in Solid Waste Data Appendix.

(e) See Waste Composition Data in Solid Waste Data Appendix.

XYLENES COMPOSITIONS

	WT%
BLENDED GASOLINES - REG, UL, SUL	8.0
FCC GASOLINE	8.9
REFORMATE	14.0
NAPHTHA	4.0
JP-4	1.4
COKER GASOLINE	2.5

SEE APPENDIX E FOR COMPOSITION BACKGROUND DATA

Conoco Inc.
Calculation Sheet

Made By
Checked By
Date
Page of
Title
Job No.
Field
State

XYLENE CALCULATIONS

STORAGE TANKS:

FLOATING ROOF = $\left[(32.1\ TPY)\left(\frac{8.0}{100}\right) + (1.7\ TPY)\left(\frac{8.0}{100}\right) + (28.2\ TPY)\left(\frac{8.2}{100}\right)\right]\left(\frac{6}{6}\right.$
$\times 2000 = \underline{308\ LB/YR}$

FIXED ROOF = $(56.22\ TPY)\left(\frac{4.0}{100}\right)\left(\frac{0.19}{1.6}\right)(2000) = \underline{534\ LB/YR}$

LOADING LOSS = $\left[(10.62\ TPY)\left(\frac{8.0}{100}\right) + (42.73\ TPY)\left(\frac{14.0}{100}\right) + (19.55\ TPY)\left(\frac{8.0}{100}\right)\right]$
$\times \frac{0.19}{6.2} \times 2000 = \underline{514\ LB/YR}$

FUGITIVE EQUIPMENT RELEASES = SEE APPENDIX I

PROCESS DRAINS = $(286.9\ TPY)\left(\frac{1.03}{100}\right)\left(\frac{0.19}{3.4}\right)(2000) = \underline{330\ LB/YR}$

API SEPARATORS = $(39.42\ TPY)\left(\frac{1.03}{100}\right)\left(\frac{0.19}{3.4}\right)(2000) = \underline{45\ LB/YR}$

COOLING TOWERS = $(29.9\ TPY)\left(\frac{1.03}{100}\right)(2000) = \underline{616\ LB/YR}$

WASTEWATER

EFFLUENT = $7.31 \times 10^9\ LB/YR \times \frac{5\ LB}{10^9\ LB} = \underline{37\ LB/YR}$

TO AIR = $\frac{36.6\ LB/YR}{105} \times .24 = 175.7\ LB/YR = \underline{176\ LB/YR}$

WASTE RELEASES:

TO AIR = $\left(14{,}650 \times \frac{2.315}{10^6} + 1112 \times \frac{196}{10^6}\right)(2000)(0.320) = \underline{161\ LB/YR}$

TO LAND = $\underline{0}$ (DEGRADED)

NOTE: SEE APPENDICES FOR CALCULATION BACKGROUND INFORMATION.

Made By
Checked By
Date
Page of

Conoco Inc.
Calculation Sheet

Title

Job No.
Field
State

SAL 000005367

APPENDICES
1987 SARA 313 REPORT
LAKE CHARLES REFINERY

APPENDIX	A	REPORTABLE TOXIC CHEMICAL LIST DEVELOPMENT
APPENDIX	B	EMISSION FACTORS
APPENDIX	C	BLUE BOOK DATA
APPENDIX	D	MAXIMUM QUANTITY ON-SITE
APPENDIX	E	CHEMICAL COMPOSITION DATA
APPENDIX	F	SOLID WASTE DATA AND CALCULATIONS
APPENDIX	G	WASTEWATER, API SEPARATOR/DAF-IAF, AND COOLING TOWER DATA
APPENDIX	H	1987 EMISSIONS INVENTORY - STORAGE TANK VOC
APPENDIX	I	FUGITIVE EQUIPMENT VOC CALCULATIONS AND DATA
APPENDIX	J	LOADING LOSS VOC CALCULATIONS

APPENDIX A

REPORTABLE TOXIC CHEMICAL LIST DEVELOPMENT

Calculation Sheet

Title

SAL 000005369

conoco

Interoffice Communication

To P. L. Youngblood

From T. G. Waltrip

Date February 25, 1988

Subject SARA Title III - "Toxic Chemicals" List for Sec. 313 Reporting

As you requested in your IOC of February 9, 1988, we have put together a survey of the "toxic chemicals" which are listed under SARA Title III for Section 313 reporting and which may be present in refineries at or above the concentration criteria and threshold quantities as defined in the final rule on reporting requirements (FR 53, February 16, 1988).

The chemicals are divided between two tables. Table I contains a list of chemicals which may be present above specified de minimis concentrations and threshold quantities in crudes, intermediates and products. Table II contains a list of chemicals which may be present in additives incorporated into products, as well as chemicals which may be used as process chemicals, catalysts, etc.

This list is by no means to be considered as complete or totally comprehensive, but only represents our best effort to narrow the scope of the reporting task and to present a guide to be used in the reporting process. Particularly, additives and process chemicals will require a thorough search of the MSDS information and any other descriptive material on hand relating to these. We have attempted to err on the conservative side in estimating chemicals reportable both by concentration criteria and quantity thresholds.

Pseudocumene (1,2,4 trimethylbenzene) was not included in the Tables, in anticipation of its removal by EPA. On the other hand, however, several chemicals have been included on the list which may not have been present in refineries in 1987, nor currently, but which may be present in alternative processes, catalysts, etc., in future years. Also as the threshold quantities decline to 25,000 pounds by 1989, some not reported for 1987 may then be reportable.

We hope these lists will be a reasonable and fairly comprehensive starting point for Section 313 reporting. If you have any questions, please call Ollie Engle, who has coordinated our efforts.

T. G. Waltrip

T. G. Waltrip
bl
cc: JEC-TLT-MAC-OFE-F:011.4

SAL 000005370

SARA Title III, Sec. 313 Reporting:

TABLE I

Chemicals which may be present in crudes, intermediate streams, and finished products:

Chemical	CAS Number	De Minimis Conc. Wt.%	Crude Oil	Refinery Process: Crude Fract.	Reformer	Thermal	Cat Poly	Cryo/ VRU	FCC	(1) Other	Products: Gaso.	Dist.	(2) Other
Benzene	71-32-2	0.1	X	X	X	X			X		X		
Ethylene	74-85-1	1				X		X	X				
Naphthalene	91-20-3	1	X	X		X			X			X	
Biphenyl	92-52-4	1							X				
Xylene	1330-20-7	1	X	X	X	X			X		X		
o-Xylene	95-47-6	1	X	X	X	X			X		X		
m-Xylene	108-38-3	1	X	X	X	X			X		X		
p-Xylene	106-42-3	1	X	X	X	X			X		X		
(1-Methylethyl) Benzene	98-82-8	1	X	X	X				X		X		
Ethyl Benzene	100-41-4	1	X	X	X				X		X		
Styrene	100-42-5	1				X			X		X		
1,3 Butadiene	106-99-0	0.1				X		X	X	X			
Toluene (4)	108-88-3	1	X	X	X	X			X		X		
Cyclohexane	110-82-7	1	X	X		X			X		X		
Propylene	115-07-1	1				X	X	X	X				X
Anthracene (3)	120-12-7	1	X	X									X
MTBE	1634-04-4	1								X	X		
Sulfuric Acid (4)	7664-93-9	1								X			X
Ammonium Sulfate	7783-20-2	1								X			X

(1) 1,3 Butadiene and MTBE are produced in MTBE Units; Sulfuric Acid in Sulfuric Acid Unit; Ammonium Sulfate in NASH Units.
(2) ~~Includes: LPG; Sulfuric Acid Plant Product; Asphalt and Residual Oils from highly aromatic crude oil; NASH Product.~~
(3) May be present in quantities approaching one percent in aromatic crudes and their residuals.
Paraffinic and naphthenic crudes are not believed to contain substantial anthracene.
(4) Sulfuric Acid and Toluene also appear in Table II, Process Chemicals.

SARA Title III, Sec. 313 Reporting

TABLE II

Chemicals which may be used as process chemicals or as additives in finished products.

Chemical[1]	CAS Number	De Minimis Conc. Wt.%	Process Use[2]	Blending Additive	Area of Use
Diethanolamine	111-42-2	1	X		Amine Unit
Bis (2-ethylhexyl) adipate	103-23-1	1		X	Possible Lube Oil Additive
Ethylene Dibromide	106-93-4	0.1		X	Leaded Gasoline
Ethylene Dichloride	107-06-2	0.1		X	Leaded Gasoline
Ethylene Glycol	107-21-1	1	X	X	Refrigerant Systems; Closed Loop Cooling Systems
Phenol	108-95-2	1	X		FCC Caustic Wash; Sour Water Stripper.
Hydrazine	302-01-2	0.1	X		Boiler Feedwater Treatment
Sodium Hydroxide	1310-73-2	1	X	X	Caustic Wash Systems; Greasemaking
Cresol	1319-77-3	1	X		Lube Solvent Treating; FCC Caustic Wash; Sour Water Stripper, etc.
o-Cresol	95-48-7	1	X		Same as above.
m-Cresol	108-39-4	1	X		Same as above.
p-Cresol	106-44-5	1	X		Same as above.
Asbestos (friable)	1332-21-4	0.1	X	X	Insulation; Asbestos Filled Asphalt
Aluminum Oxide	1344-28-1	1	X	X	Catalysts; H/T; FCC & Cat Poly
Aluminum	7429-90-5	1	X		Mechanical
Lead Dust	7439-92-1	1	X		Greasemaking; Mechanical
Lead Compounds-Inorganic Salts		0.1	X		Bender Sweetening
Lead Compounds-Organic		1		X	Leaded Gasoline Blending (TEL)
Manganese & Compounds		1	X	X	Leaded Gasoline Blending (MMT); Mechanical
Mercury & Compounds		1	X		Mechanical
Nickel & Compounds		1	X		Catalyst
Antimony & Compounds		1		X	Greasemaking
Barium & Compounds		1		X	Lube Blending/Greasemaking
Chromium		1	X		Mechanical
Chromium Compounds (Hexavalent)		0.1	X		Cooling Water System Treating (chromate)
Chromium Compounds (Other)		1	X		(?)
Cobalt & Compounds		1	X		Catalyst
Copper & Compounds		1	X	X	Mechanical
Molybdenum Trioxide	1313-27-5	1	X		Catalyst

- Continued -

SARA Title III, Sec. 313 Reporting:

TABLE II (Cont'd)

Chemicals which may be used as process chemicals or as additives in finished products.

Chemical[1]	CAS Number	De Minimis Conc. Wt.%	Process Use[2]	Blending Additive	Area of Use
Vanadium (fume or dust)	7440-62-2	1	X		Catalyst, H/T; Mechanical
Zinc & Compounds		1	X	X	Lube Blending/Greasemaking; H_2S Absorbent; Water Treating
Hydrochloric Acid	7647-01-0	1	X		Mechanical
Phosphoric Acid	7664-38-2	1	X		Cat Poly Catalyst
Hydrogen Fluoride	7664-39-3	1	X		HF Alkylation
Ammonia	7664-41-7	1	X		Refrigerant; Sour Water Stripper; NASH; Overhead Corrosion Control
Sulfuric Acid[3]	7664-93-9	1	X		Cooling Water System; etc.
Nitric Acid	7697-37-2	1	X		
Chlorine	7782-50-5	1	X		Cooling Water System; Well Water System; Effluent Water System
Titanium Dioxide	13463-67-7	1	X		Mechanical (Paint)
Acetone	67-64-1	1	X	X	Butamer Guard Reactor Spent Adsorbent; Greasemaking; etc.
n-Butyl Alcohol	71-36-3	1	X	X	Same as above.
Sec-Butyl Alcohol	78-92-2	1	X	X	Same as above.
tert-Butyl Alcohol	75-65-0	1	X	X	Same as above.
Carbon Disulfide	75-15-0	1	X		Sulfiding HDS Catalyst
Methyl Chloride	74-87-3	1	X		Mechanical
Dichloro Methane	75-09-2	1	X		Mechanical
Formaldehyde	50-00-0	0.1		X	Lube Blending (FR Hydraulic Fluid)
Hydroquinone	123-31-9	1	X		Boiler Feedwater Treatment
Methanol	67-56-1	1	X	X	MTBE Process; Mechanical
Methyl Ethyl Ketone	78-93-3	1	X		Lube Solvent Dewaxing
1,1,1 Trichlorethane	71-55-6	1	X		Mechanical
Toluene[3]	108-88-63	1	X		Lube Solvent Dewaxing; Mechanical

(1) Listed metals in form of either fume or dust. Metals in the form of articles and which are not released to the environment are not reportable.
(2) Process use category includes mechanical in this list.
(3) Sulfuric Acid and Toluene also appear in Table I, crudes, intermediates and products.

SARA Title III, Sec. 313 Reporting

Addendum to Tables I & II

Chemicals in Tables I & II which were listed carcinogens (de minimis concentration of 0.1 percent) were determined by W. D. Broddle, per 29 CFR 1910.1200 (d)(4), through a search of

(1) IARC Monographs
(2) NTP Reports
(3) OSHA 29 CFR Part 1910, Subpart Z,

as:

Asbestos
Benzene
1,3 Butadiene
Hexavalent Chromium
Ethylene Dibromide
Ethylene Dichloride
Formaldehyde
Hydrazine
Lead Compounds (Inorganic salts only)

conoco

Interoffice Communication

To P. L. Youngblood

From T. G. Waltrip

Date March 7, 1988

Subject SARA Title III - "Toxic Chemicals" List for Sec. 313 Reporting

REFERENCE: Subject letter of February 26, 1988

ADDITION TO TABLE I

Although pseudocumene was removed from the Extremely Hazardous Substances List, you have pointed out that it is still classed as a long term hazard and therefore is still included in the Sec. 313 Release Reporting.

A corrected copy of Table I, which includes pseudocumeme and the affected streams and products, is attached. Please attach this revised copy to my February 25 letter and discard the original Table I.

T. G. Waltrip

T. G. Waltrip
jd
cc: JEC-TLT-MAC-OFE-F:011.4

SAL 000005375

SARA Title III, Sec. 313 Reporting:

TABLE I

Chemicals which may be present in crudes, intermediate streams, and finished products:

Chemical	CAS Number	De Minimis Conc. Wt.%	Crude Oil	Refinery Process: Crude Fract.	Reformer	Thermal	Cat Poly	Cryo/ VRU	FCC	(1) Other	Products: Gaso.	Dist.	(2) Other
Benzene	71-32-2	0.1	X	X	X	X			X		X		
Ethylene	74-85-1	1				X		X	X				
Naphthalene	91-20-3	1	X	X		X			X			X	
Biphenyl	92-52-4	1							X				
Xylene	1330-20-7	1	X	X	X	X			X		X		
o-Xylene	95-47-6	1	X	X	X	X			X		X		
m-Xylene	108-38-3	1	X	X	X	X			X		X		
p-Xylene	106-42-3	1	X	X	X	X			X		X		
(1-Methylethyl) Benzene	98-82-8	1	X	X	X				X		X		
1,2,4 Trimethylbenzene (Pseudocumene)	95-63-6	1	X	X	X				X		X		
Ethyl Benzene	100-41-4	1	X	X	X				X		X		
Styrene	100-42-5	1				X			X		X		
1,3 Butadiene	106-99-0	0.1				X		X	X	X			
Toluene (4)	108-88-3	1	X	X	X	X			X		X		
Cyclohexane	110-82-7	1	X	X		X			X		X		
Propylene	115-07-1	1				X	X	X	X				X
Anthracene (3)	120-12-7	1	X	X									X
MTBE	1634-04-4	1								X	X		
Sulfuric Acid (4)	7664-93-9	1								X			X
Ammonium Sulfate	7783-20-2	1								X			X

(1) 1,3 Butadiene and MTBE are produced in MTBE Units; Sulfuric Acid in Sulfuric Acid Unit; Ammonium Sulfate in NASH Units.
(2) Includes; LPG, Sulfuric Acid Plant Product; Asphalt and Residual Oils from highly aromatic crude oil; NASH Product.
(3) May be present in quantities approaching one percent in aromatic crudes and their residuals.
Paraffinic and naphthenic crudes are not believed to contain substantial anthracene.
(4) Sulfuric Acid and Toluene also appear in Table II, Process Chemicals.

SAL 000005376

LAKE CHARLES

POTENTIALLY REPORTABLE TOXIC CHEMICALS
UNDER SARA 313

MOST LIKELY	POSSIBLY (Most Have Been Eliminated)
Benzene*	~~Bis (2 ethylhexyl) adipate~~
Ethylene	~~Hydrazine*~~
Naphthalene	~~Asbestos* (landfilled)~~
Biphenyl	Cobalt
Xylenes	~~Lead (Dust, Inorg. Salts*)~~
1-Methylethyl benzene (Cumene)	~~Mercury~~
Ethyl benzene	~~Nitric Acid~~
Styrene	~~Titanium dioxide~~
1,3 Butadiene*	~~Acetone~~
Toluene	~~Methyl chloride~~
Cyclohexane	~~Dichloroethane~~
Propylene	~~Hydroquinone~~
~~MTBE~~	Hydrochloric acid
Sulfuric acid	~~Butyl alcohols~~
Phenol	~~Formaldehyde*~~ ← INVESTIGATE — <19% ✓
~~Ethylene dibromide*~~	~~Ammonium sulfate~~ — SEP. REPORT
Ethylene dichloride*	~~Ethylene glycol~~
Sodium hydroxide	~~Antimony~~
Cresol	~~Barium~~
Aluminum oxide	~~Copper~~
Manganese Compounds	~~Dichloromethane~~ — METHYLENE CHLORIDE
~~Hydrogen Fluoride~~	~~Carbon disulfide~~
Ammonia	~~Freon 113~~
Methanol	~~Vanadium~~
~~MEK~~	~~Isopropanol~~
~~2 Methoxy ethanol~~	~~Aluminum~~
Molybdenum trioxide	~~Anthracene~~
Nickel	SODIUM SULFATE
Chlorine*	
~~Diethanolamine~~	
~~Hexavalent Chromium*~~	
~~Zinc (fume or dust)~~	
Phosphoric acid	
1,2,4 Trimethylbenzene (Psuedo Cumene)	
1,1,1 Trichloro Ethane	
~~Carbon Tetrachloride~~	
~~Lead (Organic)~~	

* Carcinogen subject to deminimus concentration of 0.1 wt%. All other chemicals have deminimus concentrations of 1.0 wt%.

NOTES: (1) OLLIE ENGLE LIST PLUS REFINERY PROPOSED LISTS - API MEETING (4-15-88)

(2) CHEMICALS FOUND ON ONLY ONE COMPANY'S PRELIMINARY LIST WERE NOT ADDED TO THIS LISTING

SAL 000005377

CHEMICAL ELIMINATED
1987 SARA 313 REPORT
LAKE CHARLES REFINERY

METHYL t-BUTYL ETHER - NONE REPORTED AS USED BY BLUEBOOK

ETHYLENE DIBROMIDE — 17% OF TEL (OLLIE ENGLE - FROM MANUF. SPEC.)

140,000 × .17 = 23,800 LB. (< 75,000 LB - PROCESSED CHEMI

ETHYLENE DICHLORIDE — 18% OF TEL (OLLIE ENGLE - FROM MANUF SPEC.)

140,000 × .18 = 25,200 LB. (< 75,000 LB - PROCESSED CHEMICAL

METHYL ETHYL KETONE — NONE REPORTED AS USED BY BLUEBOOK

2-METHOXYETHANOL — NONE REPORTED AS USED BY BLUE BOOK

DIETHANOLAMINE — NONE REPORTED AS USED BY BLUE BOOK

CHROMIUM — ONLY 6,400 LBS OF BETZ 65 USED, WELL BELOW THRESHOLD. (< 10,000 USED CHEMICA

ZINC DUST — NONE REPORTED AS USED BY BLUEBOOK

CARBON TETRACHLORIDE — NONE LISTED AS USED BY BLUE BOOK

LEAD - 39.4% OF TEL (OLLIE ENGLE - FROM MANUF. SPEC)

140,000 × .394 = 55,160 LB. (< 75,000 LB - PROCESSED CHEMICA

BIS (2 ETHYLHEXYL) ADIPATE — NONE REPORTED AS USED BY BLUEBOOK

HYDROGEN FLUORIDE - NONE REPORTED AS USED (BLUE BOOK)

HYDRAZINE - N.R. (BLUEBOOK)

ASBESTOS - FOR STRUCTURAL INSULATION - NOT REPORTABLE - EPA GUIDANCE

MERCURY - ALL IN CLOSED INSTRUMENT SYSTEMS

NITRIC ACID - N.R. (BLUE BOOK)

TITANIUM DIOXIDE - DROPPED FROM LIST (6-88).

ACETONE / METHYL CHLORIDE / DICHLOROETHANE / HYDROQUINONE - N.R. (BLUEBOO

HYDROCHLORIC ACID — 5.22 MM LB. X0.3 = 1.57 MM LB (BLUE BOOK)

BUTYL ALCOHOLS — N.R. (BLUE BOOK)

FORMALDEHYDE - CONSIDERED TO BE PROCESSED AS AN IMPURITY; BELOW DE MINIMUS, SO NOT REPORTED (6-15 API MTG)

AMMONIUM SULFATE - TO BE REPORTED BY KEARLEY INDUSTRIES.

ETHYLENE GLYCOL — N.R. (BLUEBOOK)

ANTIMONY / BARIUM / COPPER / CARBON DISULFIDE - N.R. (BLUE BOOK)

FREON 113 - N.R. (BLUEBOOK)

VANADIUM - BELOW DEMINIMUS ON FCC CATALYST

ISO PROPANOL / ALUMINUM - N.R. (BLUE BOOK)

Canada Inc
Calculation Sheet

Job No

Title

Field

State

SAL 000005379

ANTHRACENE – NO STREAM COMPOSITION DATA AVAILABLE; LESS THAN DE MINIMUS ACCORDING TO OLLIE ENGLE AND BILL GEUBELLE.

ARSENIC; PHOSPHOROUS – N. R. (BLUE BOOK)

NOTE: THE FINAL CHEMICAL LIST WAS REVIEWED BY BRANDT BUTLER. IT WAS SUGGESTED THAT DATA ON TRADE NAME CHEMICALS AND ADDITIVES BE REVIEWED FOR OMISSIONS. SINCE THE TRADE NAME CHEMICAL NOTIFICATION REQUIREMENTS ARE NOT YET ENACTED, FUTURE DATA MAY EXPAND THE LIST OF REPORTABLE CHEMICALS.

THRESHOLD CALCULATIONS
1987 SARA 313 REPORT
LAKE CHARLES REFINERY

NOTE: SINCE THE LAKE CHARLES REFINERY HAS A LARGER THROUGHPUT THAN THE PONCA CITY REFINERY, THE PONCA CITY THRESHOLD CALCULATIONS ARE ADEQUATE FOR ESTABLISHING THE PRESENCE OF MOST PROCESS CHEMICALS IN LAKE CHARLES ABOVE THE THRESHOLD LEVELS.

BENZENE = 3.8×10^6 BBL CRUDE $\times \frac{42}{7.48} \times .8 \times 62.4 \times .001$

= 1.33×10^6 LB (12-87 ONLY, P.C. DATA) *

ETHYLENE = $92{,}800 \times 10^3$ BBL FUEL GAS $\times \frac{42}{7.48} \times .356$ (FROM TSL REPORT) $\times 62.4 \times .06$

= 694×10^6 LB (1987 TOTAL, P.C. DATA)

XYLENES = 15381.4×10^3 BBL $\times \frac{42}{7.48} \times .76 \times 62.4 \times 0.1$

= 410×10^6 LB (UL GASO. ONLY, P.C. DATA)

ETHYL BENZENE = 15381.4×10^3 BBL $\times \frac{42}{7.48} \times .76 \times 62.4 \times 0.017$

= 70×10^6 LB (UL GASO. ONLY, P.C. DATA)

1,3-BUTADIENE = 2.6×10^6 BBL $\times \frac{42}{7.48} \times 62.4 \times .003 \times .584$ (FROM TSL REPORT)

= 1.6×10^6 LB (B-B ONLY, P.C. DATA)

* ANNUAL SUMMARY OF GC DATA FOR PONCA CITY REFINERY, 1987. THROUGHPUTS FROM 1987 BLUE BOOKS

TOLUENE $= 15381.4 \times 10^3 \times \frac{42}{7.48} \times .76 \times 62.4 \times .079$

$= 324 \times 10^6$ LB (UL GASO. ONLY, P.C. DATA)

CYCLOHEXANE $= 7.2 \times 10^6 \times \frac{42}{7.48} \times .76 \times 62.4 \times .01$

$= 19 \times 10^6$ LB (FCC GASO. ONLY, P.C. DATA)

PROPYLENE $= 92{,}800 \times 10^3 \times \frac{42}{7.48} \times .356 \times 62.4 \times .03$ (TSL)

$= 347 \times 10^6$ LB (1987 TOTAL, P.C. DATA)

NAPHTHALENE $= [1380.4 + 2860] \times 10^6 \times .03 = 127 \times 10^6$ LB (P.C. DAT.
(KERO + DIESEL)

BIPHENYL $= 7.2 \times 10^6 \times \frac{42}{7.48} \times .76 \times 62.4 \times .01 = 19 \times 10^6$ LB (P.C. DAT.
(FCC GASO.)

CUMENE $= 3649.6 \times 10^6 \times .01 = 36 \times 10^6$ LB (U.L. GASO. ONLY P.C. DATA)

PSEUDO CUMENE $= (2\%) = 72 \times 10^6$ LB (UL GASO., P.C. DATA)

STYRENE $= (1\%) = 36 \times 10^6$ LB (UL GASO., P.C. DATA)

SULFURIC ACID = 11,800 LB USED

PHENOL = 3.7 MMLB × 0.30 = 1.1 MM LB USED

SODIUM HYDROXIDE = 10.66 MMLB × 0.5 = 5.33 MM LB USED

CRESOL = 3.7 MM LB × 0.3 × 0.15 = 167,000 LB USED

ALUMINUM OXIDE = 2300 + 700 + 1.28 mm = 1.28 mM LB

MANGANESE = 142,800 lb MMT × 0.62 = 88,536 lb Mn. Compou

AMMONIA = 52,200 lb Used

METHANOL = 6800 Gal × $\frac{1\ CF}{7.48\ Gal}$ × $\frac{62.4\ lb}{CF}$ × .79 = 44,800 lb

MOLYBDENUM TRIOXIDE = 1.35 MM LB × 0.15 = 204,000 LB

NICKEL = $1.35 \times 10^6 \times 0.04$ = 54,000 LB

CHLORINE = 90,600 LB USED

PHOSPHORIC ACID = 660,000 × .625 = 412,500 LB USED

1,1,1-TRICHLOROETHANE = 53 drums × 55 × 8.33 = 24,300 LB

COBALT = 360,000 × .04 = 14,400 LB

HYDROCHLORIC ACID = 5.224 MMLB × .3 = 1,570,000 LB

SODIUM SULFATE = 11,800 LB SO_4^{2-} × $\frac{142}{96}$ = 17,500 LB MAX

(ASSUMES ALL SULFATE GOES TO Na_2SO_4)

NOTE: USED CHEMICAL DATA FROM 1987 BLUE BOOK

APPENDIX B

EMISSION FACTORS

TABLE D-1. AVERAGE FUGITIVE EMISSION FACTORS FOR THE SYNTHETIC ORGANIC CHEMICALS MANUFACTURING INDUSTRY (SOCMI)[a]

Fugitive-emission source	Emission factor (lb/h)
Pump seals	
Light liquids	0.11
Heavy liquids	0.047
Valves (in-line)	
Gas	0.012
Light liquid	0.016
Heavy liquid	0.00051
Gas safety-relief valves	0.23
Open-ended lines	0.0037
Flanges	0.0018
Sampling connections	0.033
Compressor seals	0.50

[a] Emission Factors for Equipment Leaks of VOC and HAP, EPA-450/3-86-002, January 1986, Table 3-4. These factors take into account a leak frequency determined from field studies in the synthetic organic chemicals manufacturing industry. Light liquids have a vapor pressure greater than 0.1 psia at 100°F.

REFERENCE - ESTIMATING RELEASES AND WASTE TREATMENT EFFICIENCIES FOR THE TOXIC CHEMICAL RELEASE INVENTORY FORM, EPA, 12-87, p. D-2

SAL 000005385

TABLE D-2. LEAKING AND NONLEAKING AVERAGE FUGITIVE EMISSION FACTORS FOR THE SYNTHETIC ORGANIC CHEMICALS MANUFACTURING INDUSTRY (SOCMI)[a]

Fugitive-emission source	Leaking (>10,000 ppm) emission factor (lb/h)	Nonleaking (<10,000 ppm) emission factor (lb/h)
Pump seals		
Light liquids	0.96	0.026
Heavy liquids	0.85	0.030
Valves (in-line)		
Gas	0.099	0.0011
Light liquid	0.19	0.0038
Heavy liquid	0.00051	0.00051
Gas safety-relief valves	3.72	0.098
Open-ended lines	0.0263	0.0033
Flanges	0.083	0.00013
Sampling connections	-	-
Compressor seals	3.54	0.20

[a] Emission Factors for Equipment Leaks of VOC and HAP, EPA-450/3-86-002, January 1986, Table 3-3. These factors take into account a leak frequency determined from field studies in the synthetic organic chemicals manufacturing industry. Light liquids have a vapor pressure greater than 0.1 psia at 100°F.

REFERENCE - EPA GUIDANCE DOCUMENT, p. D-3

SAL 000005386

Table 9.1-2. FUGITIVE EMISSION FACTORS FOR PETROLEUM REFINERIES[a]

Emission Source	Process Stream Type[b]	Emission Factor Units	Emission Factors: Uncontrolled Emissions[c]	Emission Factors: Controlled Emissions	Applicable Control Technology	Emission Factor Rating
Pipeline valves[d]	II	lb/hr-source kg/day-source	0.059 (0.030 - 0.110) 0.64 (0.32 - 1.19)	NA	Monitoring and maintenance program	A
	III	" "	0.024 (0.017 - 0.036) 0.26 (0.18 - 0.39)	NA		A
	IV	" "	0.0005 (0.0002- 0.0015) 0.005 (0.002 - 0.016)	NA		A
	V	" "	0.018 (0.007 - 0.045) 0.20 (0.08 - 0.49)	NA		A
Open ended valves[d,e]	I	" "	0.005 (0.0016- 0.016) 0.05 (0.017 - 0.17)	NA	Installation of cap or plug on open end of valve/line	A
Flanges[d]	I	"	0.00056 (0.0002- 0.0025) 0.0061 (0.002 - 0.027)	NA	Monitoring and maintenance program	A
Pump seals[d]	III	" "	0.25 (0.16 - 0.37) 2.7 (1.7 - 4.0)	NA	Mechanical seals, dual seals, purged seals, monitoring and maintenance programs, controlled degassing vents	A
	IV	" "	0.046 (0.019 - 0.11) 0.50 (0.21 - 1.2)	NA		A
Compressor seals[d]	II	" "	1.4 (0.66 - 2.9) 15 (7.1 - 32)	NA	Mechanical seals, dual seals, purged seals, monitoring and maintenance programs, controlled degassing vents	A
	V	" "	0.11 (0.05 - 0.23) 1.2 (0.5 - 2.5)	NA		A
Process drains[d]	I	" "	0.070 (0.023 - 0.20) 0.76 (0.25 - 2.2)	NA	Traps and covers	A
Pressure vessel relief valves (gas service)[d,f]	II	" "	0.36 (0.10 - 1.3) 3.9 (1.1 - 14)	Negligible	Rupture disks upstream of relief valves and/or venting to a flare	A
Cooling towers	-	lb/10[6] gal cooling water	6	0.70	Minimization of hydrocarbon leaks into cooling water system. Monitoring of cooling water for hydrocarbons	D
		kg/10[6] liters cooling water	0.7	0.083		
		lb/10[3] bbl refinery feed[g]	10	1.2		
		kg/10[3] liters refinery feed	0.03	0.004		
Oil/water separators	-	lb/10[3] gal wastewater	5	0.2	Covered separators and/or vapor recovery systems	D
		kg/10[3] liter waste water	0.6	0.024		
		lb/10[3] bbl refinery feed	200	10		
		kg/10[3] liters refinery feed	0.6	0.03		
Storage		See Section 4.3				
Loading		See Section 4.4				

[a]Data from References 2, 4, 12 and 13 except as noted. Overall, less than 1% by weight of the total VOC emissions are methane.
NA = Not Available.
[b]The volatility and hydrogen content of the process streams have a substantial effect on the emission rate of some fugitive emission sources. The stream identification numerals and group names and descriptions are:

Stream Identification Numeral	Stream Name	Stream Group Description
I	All streams	All streams
II	Gas streams	Hydrocarbon gas/vapor at process conditions (containing less than 50% hydrogen, by volume)
III	Light liquid and gas/liquid streams	Liquid or gas/liquid stream with a vapor pressure greater than that of kerosene (> 0.1 psia @ 100°F or 689 Pa @ 38°C), based on the most volatile class present at > 20% by volume
IV	Heavy liquid streams	Liquid stream with a vapor pressure equal to or less than that of kerosene (≤ 0.1 psia @ 100°F or 689 Pa @ 38°C), based on the most volatile class present at > 20% by volume
V	Hydrogen streams	Gas streams containing more than 50% hydrogen by volume

[c]Numbers in parentheses are the upper and lower bounds of the 95% confidence interval for the emission factor.
[d]Data from Reference 17.
[e]The downstream side of these valves is open to the atmosphere. Emissions are through the valve seat of the closed valve.
[f]Emission factor for relief valves in gas service is for leakage, not for emissions caused by vessel pressure relief.
[g]Refinery rate is defined as the crude oil feed rate to the atmospheric distillation column.

49

REFERENCE - AP-42, THIRD ADDITION, P. 9.1-10.

SAL 000005387

TABLE A-2. FATE OF HAZARDOUS AND/OR TOXIC POLLUTANTS AT LOW CONCENTRATIONS IN SECONDARY, BIOLOGICAL WASTEWATER TREATMENT PLANTS

	OVERALL PERCENT REMOVAL			PERCENT VOLATILIZED TO AIR			PERCENT PARTITIONED TO SLUDGE			PERCENT BIODEGRADED		
POLLUTANT	ACCLIMATED	UNACCLIMATED		ACCLIMATED	UNACCLIMATED		ACCLIMATED	UNACCLIMATED		ACCLIMATED	UNACCLIMATED	
		MEDIAN	LOW		MEDIAN	LOW		MEDIAN	LOW		MEDIAN	LOW
	%	%	%	%	%	%	%	%	%	%	%	%
2,4-D	90	60	50	0	0	0	7	5	4	83	55	46
ACENAPHTHYLENE	95	90	90	19	54	54	9	8	8	67	28	28
ACETALDEHYDE	95	95	95	0	5	5	10	10	10	85	81	81
ACETONE	95	50	30	0	3	2	10	5	3	85	43	26
ACROLEIN	95	95	95	0	5	5	10	10	10	85	81	81
ACRYLAMIDE	90	62	50	0	0	0	9	6	5	81	56	45
ACRYLIC ACID	90	85	80	0	0	0	9	9	8	81	77	72
ACRYLONITRILE	90	75	70	0	4	4	9	8	7	81	64	60
ALDRIN	90	90	90	0	0	0	33	33	33	57	57	57
ANILINE	95	85	60	0	0	0	10	9	8	86	77	72
ANTHRACENE	95	90	90	0	0	0	52	50	50	43	41	41
ANTIMONY	60	60	60	0	0	0	60	60	60	0	0	0
ARSENIC	50	50	50	0	0	0	50	50	50	0	0	0
BARIUM	90	90	90	0	0	0	90	90	90	0	0	0
BENZAL CHLORIDE	90	55	50	0	17	15	7	4	4	83	34	31
BENZENE	95	90	90	24	72	72	2	2	2	69	16	16
BENZOTRICHLORIDE	90	45	40	18	14	12	7	4	3	65	28	25
BENZYL CHLORIDE	90	90	90	23	45	45	7	7	7	60	38	38
BIS-2-CHLOROETHYL ETHER	90	50	30	0	3	2	9	5	3	81	43	26
BIS-2-ETHYLHEXYL PHTHALATE	90	90	90	0	0	0	66	66	66	24	24	24
BROMOMETHANE	95	95	95	88	90	90	0	0	0	10	5	5
BUTYL BENZYL PHTHALATE	95	90	90	0	0	0	43	41	41	52	50	50
CADMIUM	27	27	27	0	0	0	27	27	27	0	0	0
CAPTAN	90	50	30	0	0	0	7	4	2	83	46	28
CARBON DISULFIDE	95	85	80	76	77	72	1	1	1	18	8	7
CARBON TETRACHLORIDE	90	85	80	72	77	72	12	9	8	6	0	0
CHLORDANE	90	90	90	9	9	9	33	33	33	48	48	48
CHLOROBENZENE	90	90	90	27	45	45	14	14	14	50	32	32
CHLOROBENZILATE	90	60	50	9	6	5	7	5	4	74	49	41
CHLOROETHANE	95	90	90	76	81	81	1	1	1	18	8	8
CHLOROFORM	90	80	80	63	72	72	2	2	2	25	6	6
CHLOROMETHANE	95	90	90	86	86	86	1	1	1	9	4	4

(continued)

SAL 00000388

TABLE A-2 (continued)

POLLUTANT	OVERALL PERCENT REMOVAL			PERCENT VOLATILIZED TO AIR			PERCENT PARTITIONED TO SLUDGE			PERCENT BIODEGRADED		
	ACCLIMATED	UNACCLIMATED		ACCLIMATED	UNACCLIMATED		ACCLIMATED	UNACCLIMATED		ACCLIMATED	UNACCLIMATED	
		MEDIAN	LOW		MEDIAN	LOW		MEDIAN	LOW		MEDIAN	LOW
	%	%	%	%	%	%	%	%	%	%	%	%
2-CHLOROPHENOL	95	65	60	0	0	0	8	5	5	87	60	55
CHROMIUM	70	70	70	0	0	0	70	70	70	0	0	0
CRESOLS	95	50	40	0	0	0	8	4	3	87	46	37
CUMENE	95	95	95	38	57	57	4	4	4	53	34	34
CYANIDE	60	60	60	0	3	3	57	57	57	3	0	0
CYCLOHEXANE	95	95	95	10	86	86	4	4	4	82	6	6
DI-N-BUTYL PHTHALATE	90	90	90	0	0	0	20	20	20	70	70	70
DI-N-OCTYL PHTHALATE	90	90	90	0	0	0	7	7	7	83	83	83
DIBROMOMETHANE	85	80	80	43	64	64	13	12	12	30	4	4
1,2-DICHLOROBENZENE	90	87	85	45	78	77	32	9	9	14	0	0
1,3-DICHLOROBENZENE	90	87	85	45	78	77	3	3	3	42	6	6
1,4-DICHLOROBENZENE	90	87	85	45	78	77	23	9	9	23	0	0
1,2-DICHLOROETHANE	90	50	30	45	45	27	5	3	2	41	3	2
1,1-DICHLOROETHYLENE	95	90	90	76	81	81	0	0	0	19	9	9
2,4-DICHLOROPHENOL	95	55	50	0	0	0	8	4	4	87	51	46
1,2-DICHLOROPROPANE	90	70	70	45	63	63	0	0	0	45	7	7
DICHLORVOS	90	50	30	0	0	0	9	5	3	81	45	27
DICOFOL	90	90	90	45	45	45	8	8	8	37	37	37
DIETHYL PHTHALATE	90	75	70	0	0	0	1	1	1	89	74	69
3,3-DIMETHOXY BENZIDINE	80	30	20	0	0	0	8	3	2	72	27	18
2,4-DIMETHYL PHENOL	95	85	80	0	0	0	8	7	6	87	78	74
DIMETHYL PHTHALATE	95	65	60	0	0	0	0	0	0	95	65	60
2,4-DINITROPHENOL	90	75	70	0	0	0	9	8	7	81	68	63
1,4-DIOXANE	90	50	40	0	0	0	9	5	4	81	45	36
EPICHLOROHYDRIN	87	59	25	0	0	0	9	6	3	78	53	23
ETHYL BENZENE	95	90	90	24	72	72	6	5	5	66	13	13
ETHYLENE OXIDE	90	50	40	0	3	2	9	5	4	81	43	34
ETHYLENE THIOUREA	85	67	60	0	0	0	9	7	6	77	60	54
FORMALDEHYDE	85	85	80	0	4	4	9	9	8	76	72	68
HEXACHLORO-1,3-BUTADIENE	95	90	90	0	5	5	9	8	8	86	77	77
HEXACHLOROETHANE	95	90	90	0	5	5	9	8	8	86	77	77
HYDRAZINE	95	85	80	0	4	4	10	9	8	85	72	68

(continued)

SAL 000005389

TABLE A-2 (continued)

POLLUTANT	OVERALL PERCENT REMOVAL			PERCENT VOLATILIZED TO AIR			PERCENT PARTITIONED TO SLUDGE			PERCENT BIODEGRADED		
	ACCLIMATED	UNACCLIMATED		ACCLIMATED	UNACCLIMATED		ACCLIMATED	UNACCLIMATED		ACCLIMATED	UNACCLIMATED	
		MEDIAN	LOW		MEDIAN	LOW		MEDIAN	LOW		MEDIAN	LOW
	%	%	%	%	%	%	%	%	%	%	%	%
LEAD	70	70	70	0	0	0	70	70	70	0	0	0
MALEIC HYDRAZIDE	90	75	70	0	0	0	9	8	7	81	68	63
MERCURY	50	50	50	0	3	3	48	48	48	2	0	0
METHANOL	100	95	95	1	5	5	10	10	10	90	81	81
METHOXYCHLOR	90	90	90	54	54	54	8	8	8	28	28	28
METHYL ETHYL KETONE	95	50	30	0	3	2	10	5	3	85	43	26
METHYL ISOBUTYL KETONE	90	50	30	0	0	0	9	5	3	81	45	27
METHYLENE CHLORIDE	95	87	85	38	52	51	13	12	12	44	23	22
N-BUTYL ALCOHOL	95	90	90	0	0	0	10	9	9	86	81	81
N-NITROSODIMETHYL AMINE	90	75	70	0	0	0	9	8	7	81	68	63
NAPHTHALENE	95	75	70	0	4	4	27	21	20	68	50	47
NICKEL	35	35	35	0	0	0	35	35	35	0	0	0
NITROBENZENE	90	25	20	0	0	0	9	3	2	81	23	18
2-NITROPROPANE	95	95	95	86	90	90	1	1	1	9	4	4
P-BENZOQUINONE	95	50	40	0	0	0	8	4	3	87	46	37
PARATHION	0	55	40	0	0	0	0	4	3	0	51	37
PCB	92	92	92	9	9	9	22	22	22	61	61	61
PENTACHLOROPHENOL	95	25	20	0	0	0	17	5	4	78	21	16
PHENOL	95	85	80	0	0	0	14	13	12	81	72	68
PHENYLENE DIAMINE	90	75	70	0	0	0	9	8	7	81	68	63
PHOSGENE	100	100	100	1	5	5	10	10	10	90	85	85
PHTHALIC ANHYDRIDE	90	90	90	0	0	0	9	9	9	81	81	81
PYRIDINE	15	15	10	0	1	1	2	2	1	13	13	9
SELENIUM	50	50	50	0	0	0	50	50	50	0	0	0
SILVER	90	90	90	0	0	0	90	90	90	0	0	0
STYRENE	90	90	90	23	72	72	14	14	14	54	5	5
1,1,2,2-TETRACHLOROETHANE	90	25	20	36	15	12	4	1	1	50	9	7
TETRACHLOROETHYLENE	90	85	80	45	68	64	3	3	2	42	14	14
THIOUREA	90	75	70	0	0	0	9	8	7	81	68	63
TOLUENE	90	90	90	23	72	72	25	18	18	42	0	0
TOLUENE DIAMINE	90	75	70	0	0	0	9	8	7	81	68	63
TOXAPHENE	95	90	90	57	72	72	4	4	4	34	14	14

(continued)

SAL 00000539 0

TABLE A-2 (continued)

POLLUTANT	OVERALL PERCENT REMOVAL			PERCENT VOLATILIZED TO AIR			PERCENT PARTITIONED TO SLUDGE			PERCENT BIODEGRADED		
	ACCLIMATED	UNACCLIMATED		ACCLIMATED	UNACCLIMATED		ACCLIMATED	UNACCLIMATED		ACCLIMATED	UNACCLIMATED	
		MEDIAN	LOW		MEDIAN	LOW		MEDIAN	LOW		MEDIAN	LOW
	%	%	%	%	%	%	%	%	%	%	%	%
~~TRANS-1,2-DICHLOROETHYLENE~~	~~90~~	~~80~~	~~80~~	~~63~~	~~72~~	~~72~~	~~27~~	~~8~~	~~8~~	~~0~~	~~0~~	~~0~~
TRIBROMOMETHANE	65	35	30	36	21	18	5	3	2	24	11	10
1,2,4-TRICHLOROBENZENE	85	85	85	43	51	51	8	8	8	35	26	26
1,1,1-TRICHLOROETHANE	95	90	85	76	81	77	1	1	1	18	8	8
1,1,2-TRICHLOROETHANE	80	25	20	40	20	16	0	0	0	40	5	4
TRICHLOROETHYLENE	95	87	85	67	70	68	6	5	5	23	12	12
2,4,6-TRICHLOROPHENOL	95	55	50	0	0	0	8	4	4	87	51	46
1,1,2-TC 1,2,2-TF ETHANE	90	85	80	63	68	64	4	3	3	23	14	13
TRIFLURALIN	90	90	90	0	0	0	33	33	33	57	57	57
VINYL CHLORIDE	95	95	95	86	90	90	2	2	2	8	3	3
XYLENES	95	87	85	24	70	68	14	13	13	57	4	4

REFERENCE - EPA GUIDANCE DOCUMENT, pp. A-13 TO 16.

SAL 000005391

CHEMDAT 6
(DEFAULT PARAMETERS)

LAND TREATMENT MODEL DATA
(land treatment)

L,Loading (g oil/cc soil)	0.026
Enter Ci x 10^6 VO ppmw	2000
l,Depth (cm)	20
Total porosity	0.61
Air Porosity (default=0)	0.5
MW oil	282
VO diss. in water, enter 1	0
Time of calc. (days)	365.25
Biodegradation, enter 1	1
Temperature (Deg. C)	25
Wind Speed (m/s)	4.47
Area (m2)	25000

	LANDTREATMENT FRACTION LOST		INTERMEDIATE TIME 365.25 days	
COMPOUND NAME	AIR	BIO.	AIR	BIO.
METHYL ETHYL KETONE	0.714	0.286	0.714	0.286
BENZENE	0.903	.097	0.903	0.097
TOLUENE	0.494	0.506	0.492	0.508
CRESOLS	0.056	0.944	0.056	0.944
NAPHTHALENE	0.047	0.953	0.047	0.953
PHENOL	0.076	0.924	0.076	0.924
CARBON TETRACHLORIDE	0.998	0.002	0.998	0.000
TRICHLOROETHANE(1,1,1)	0.998	0.002	0.998	0.000
METHANOL	0.966	0.034	0.966	0.034
ETHYLBENZENE	0.333	0.667	0.362	0.638
CUMENE (isopropylbenzene)	0.998	0.002	0.968	0.000
XYLENE(-o)	0.320	0.680	0.320	0.680

Estimating Land Treatment Air Emissions

Based on EPA Land Treatment Model

Compound	Land Treatment Fraction Lost: Air	Land Treatment Fraction Lost: Biodegradation
Benzene	0.903	0.097
Toluene	0.494	0.506
Xylene	0.320	0.680
Phenol	0.076	0.924
Ethylbenzene	0.333	0.667
Cresol	0.056	0.944
Naphthalene	0.047	0.953
MEK	0.714	0.286
MIK	0.969	0.031
Acetone	0.978	0.022

REFERENCE - API MEETING ON REPORT FORMS 6-88, CHRIS LARSEN, CHEVRON; BASED ON AVERAGE SOIL PROPERTIES.

APPENDIX C

BLUE BOOK DATA

SAL 000005394

Conoco Inc.
Calculation Sheet

Job No.

Title

Field

State

REPORT NO. 08-0512
JOB NO 6658
PROGRAM NO. A7632

LAKE CHARLES REFINERY

PROCESSING SUPPLIES - OTHER DETAIL - SCHEDULE C
(IN THOUSANDS)

ITM-FTR	DESCRIPTION		MONTH DECEMBER 1987 QUANTITY	MONTH DECEMBER 1987 DOLLARS	PROFIT OBJ 1987 QUANTITY	PROFIT OBJ 1987 DOLLARS	CUMULATIVE TO DATE ACTUAL 1987 QUANTITY	CUMULATIVE TO DATE ACTUAL 1987 DOLLARS	CUMULATIVE TO DATE ACTUAL 1986 QUANTITY	CUMULATIVE TO DATE ACTUAL 1986 DOLLARS	-1987 CUMULATIVE ACT OVER(UNDER) QUANTITY	-1987 CUMULATIVE ACT OVER(UNDER) DOLLA
PROC SUPP-NONCLASSIFIED												
006 0001	ACID SULFURIC	LBS		4.1			11.8	692.1	424.0	270.5	11.8	692
006 0531	ACIDIC ACID	LBS					52.4	10.7			52.4	10.
006 0103	ACTIVATED ALUMINA DE-4	LBS						.2	18.0	9.5		
006 0104	ACTIVATED ALUMINA-H-151	LBS					2.3	3.2	11.8	15.3	2.3	3.
006 0376	ACTIVATED CARBON						32.0	31.3	24.5	28.5	32.0	31
006 0116	ALUM	LBS	41.2	3.2			562.8	74.1	458.2	35.7	562.8	74
006 0394	ALUMINA BALL T-162 1/2	LBS					.7	.9	2.6	3.5	.7	
006 0467	AMBERLITE 200	LBS		15.1-			.7	13.8-	8.1	12.7	.7	13
006 0012	AMMONIA	LBS	5.4	1.3			52.2	13.0	36.3	9.6	52.2	13
006 0699	AN - 676 CHEVRON OLOA	GALS	6.8	8.9			42.8	54.2	15.7	23.5	42.8	54
006 0386	ANTHRAFILT	LBS							13.2	1.7		
006 0406	B - SQUARE 10025	GAL	2.6	23.1			23.2	202.1	22.0	164.6	23.2	202
006 0508	BETZ ADJUNCT 7V	LBS					.4	.2			.4	
006 0557	BETZ AF11								2.4	54.8		
006 0169	BETZ C-30 SLIMICIDE	LBS	.3	1.3			2.0	8.3	1.7	6.9	2.0	8.
006 0178	BETZ DEI 186	LBS		6.5-			20.7	24.5			20.7	24
006 0408	BETZ DM 1047	GAL	7.1	67.8			76.8	775.2	65.9	652.3	76.8	775
006 0447	BETZ DM 276	LBS							1.5	18.0		
006 0446	BETZ DM 795	LBS							.5	5.0		
006 0177	BETZ DM1112	GALS.						.6	.2	5.3		
006 0528	BETZ EB 911	LBS						1.8-				1.
006 0710	BETZ MS 150	LBS							1.2	1.2		
006 0711	BETZ MS 200P	LBS							.6	.3		
006 0412	BETZ OS-16	GALS					.1	1.1	1.1	11.7	.1	1.
006 0209	BETZ OS-8 OS-22	GALS					.3	3.7	.4	5.0	.3	3.
006 0480	BETZ SULFITE 3	LBS					2.3	.8			2.3	
006 0163	BETZ 2W2		.1	1.0			5.0	53.0	5.8	61.2	5.0	53.
006 0164	BETZ 2W30		1.2	13.0			8.2	88.1	1.7	17.8	8.2	88.
6 560	BETZ 20026	LBS	13.2	14.1			262.2	286.5	222.6	238.5	262.2	286.
006 0437	BETZ 2020	GAL					.5	.7			.5	
006 0439	BETZ 2040						1.3	1.5			1.3	1.
006 0424	BETZ 22K	LBS.	9.2	9.5			47.1	48.0			47.1	48.
006 0428	BETZ 242	LBS					4.9	20.5	7.4	31.1	4.9	20.
006 0179	BETZ 30K	LBS	3.1	1.7			29.4	29.2			29.4	29.
006 0442	BETZ 35A	LBS					.6	.7			.6	
006 0423	BETZ 407	LBS	1.1	1.0			22.8	20.5	19.0	17.2	22.8	20.
006 0420	BETZ 65	LBS					6.4	4.7			6.4	4.
006 0017	CALCIUM HYPOCHLORITE		.1	.1			.3	.3	.3	.3	.3	
006 0735	CALGON KID	LBS	48.4	12.3			318.4	80.0			318.4	80.
006 0246	CALGON KNL-1400								.2	.6		
006 0251	CALGON WT 2460	GAL	35.5	11.7			355.3	116.4	347.8	127.1	355.3	116.
006 0363	CALGON WT 2511	LBS					268.8	43.8	361.1	64.4	268.8	43.
006 0094	CATALYST FCC EPZ -55	LBS					1,280.5	1,012.4	1,818.6	1,431.9	1,280.5	1,012.
006 1116	CATALYST FCC SP	LBS						23.8-				23.

PROCESSING SUPPLIES - OTHER DETAIL - SCHEDULE C
(IN THOUSANDS)

TM-FTR	DESCRIPTION		MONTH DECEMBER 1987 QUANTITY	MONTH DECEMBER 1987 DOLLARS	PROFIT OBJ 1987 QUANTITY	PROFIT OBJ 1987 DOLLARS	CUMULATIVE TO DATE ACTUAL 1987 QUANTITY	CUMULATIVE TO DATE ACTUAL 1987 DOLLARS	CUMULATIVE TO DATE ACTUAL 1986 QUANTITY	CUMULATIVE TO DATE ACTUAL 1986 DOLLARS	-1987 CUMULATIVE- ACT OVER(UNDER) PC QUANTITY	-1987 CUMULATIVE- ACT OVER(UNDER) PC DOLLARS
	PROC SUPP-NONCLASSIFIED											
06 0128	CATALYST HYDRO-REGENERATIO						28.0	54.6			28.0	54.6
06 9998	CATALYST W/O PREC METAL	LB								76.5		
06 0109	CATALYST-DESULF	LBS					12.6	2.1			12.6	2.1
06 1113	CATALYST-FCC SPENT	LBS		2.5-				16.9-	303.6-	106.4-		16.9-
06 0151	CATALYST-MEROX	LBS						1.2				1.2
06 0015	CATALYST-POLY	LBS	48.0	80.2			660.0	1,102.9	612.0	1,023.5	660.0	1,102.9
06 0115	CATALYST-PLATINUM	LBS	.5	27.8			2.0	233.7	3.0	50.3	2.0	233.7
06 1115	CATALYST-PLATIUM SPENT	LBS						95.1				95.1
06 0133	CATALYST-RHENIFORMING	LBS		9.0				145.5		197.5		145.5
06 0028	CATALYST-SULPHUR	LBS					17.4	63.8	69.1	150.1	17.4	63.8
06 0217	CATALYST-VANADIUM	LBS					9.9	18.1			9.9	18.1
06 9999	CATALYST,PREC METAL	TR-OZ						18.9	1.3	31.5		18.9
06 0009	CAUSTIC SODA-MERC CELL	LBS	169.5	16.1			1,775.9	149.8	1,477.8	118.9	1,775.9	149.8
06 0010	CAUSTIC SODA LIQ	LBS	784.9	40.0			8,620.9	399.9	7,380.7	342.3	8,620.9	399.9
06 0021	CAUSTIC SODA FLAKE	LBS	4.0-	.9-			128.1	28.0			128.1	28.0
06 1010	CAUSTIC SODA-SPENT	LBS		1.6-			1,654.5	266.9	2,005.2	232.1	1,654.5	266.9
06 0004	CAUSTIC WAL POTASH	LBS	67.9	34.6			135.9	69.3			135.9	69.3
06 0389	CERAMIC BALLS	LBS	35.5	23.3			225.9	160.1	53.4	30.0	225.9	160.1
06 0393	CERAMIC PELLETS AGGREGATE		3.6	1.3			141.4	65.2	210.0	96.4	141.4	65.2
06 0190	CHEMLINK IPC 5120	LBS	4.1	5.3			54.7	69.3	40.0	50.4	54.7	69.3
06 0032	CHLORINE	LBS	4.0	.8			90.6	14.8	174.8	26.9	90.6	14.8
06 0007	CLAY-ATTAPULGUS 16/30	LBS					1,271.2	95.3			1,271.2	95.3
06 0707	COASTAL 1001-C PH CNTL	GAL							.1	.7		
06 0048	CORTEC VCI-376	GAL							.1	1.1		
06 0117	DAVISON COMBUSTION PRO	LBS					2.9	67.1	4.0	88.6	2.9	67.1
06 0038	DIETHYLENE GLYCOL	LBS					106.0	28.6	140.3	44.6	106.0	28.6
06 0289	DIMETHYL SULFIDE	LBS					71.9	61.3	52.9	38.0	71.9	61.3
06 0294	DUPONT AO 23	LBS	25.9	48.6			168.1	321.9	81.9	156.4	168.1	321.9
06 0478	DUPONT DCI-6	LBS	4.2	3.3			42.4	33.6	29.3	23.3	42.4	33.6
06 0149	DUPONT FOA 11	LBS	14.2	23.2			114.3	189.1	108.2	176.9	114.3	189.1
06 0058	DYE - BRONZE REG GAS	LBS					4.3	19.2	3.8	16.6	4.3	19.2
06 0059	DYE - RED PREM GAS	LBS					5.3	21.7	7.7	31.3	5.3	21.7
06 0559	ELCO 231	LBS	2.2	3.0			116.8	156.5	116.3	154.1	116.8	156.5
06 0401	ENJAY PARADYNE 25	LBS	4.9	3.8			22.2	17.6	17.3	14.4	22.2	17.6
06 0037	ETHYL MERCAPTAN	LBS					13.4	11.2			13.4	11.2
06 0087	FCC CATALYST HEZ 55	LBS	184.3	145.9			542.0	411.4			542.0	411.4
06 0101	FCC CATALYST, CCZ-11	LBS								.1		
06 0139	FILTER MATERIALS (MISC)						187.1	9.2	26.1	2.6	187.1	9.2
06 0397	FILTREN SUPPORT MEDIA	LBS					2.0	.5			2.0	.5
06 0003	FIRE FIGHTING CHEMICAL							1.3				1.3
06 0212	HYDRO TREATING CATALYST	LB	186.2	462.1			932.4	2,485.1	708.9	2,015.7	932.4	2,485.1
06 0211	HYDROCHLORIC ACID	LBS	548.4	14.6			5,224.3	139.3	4,157.9	117.5	5,224.3	139.3
06 0138	HYDROGEN, ELECTRO	CU-FT		.9-			88.4	3.4	82.1	3.5	88.4	3.4
06 0300	K602	LBS	5.2	8.1			16.6	25.8	1.6	18.1	16.6	25.8

REPORT NO. 08-0512
JOB NO 6658
PROGRAM NO. A7632

LAKE CHARLES REFINERY

PROCESSING SUPPLIES - OTHER DETAIL - SCHEDULE C
(IN THOUSANDS)

RUN DATE 01/29/8

ITM-FTR	DESCRIPTION		MONTH DECEMBER 1987 QUANTITY	MONTH DECEMBER 1987 DOLLARS	PROFIT OBJ 1987 QUANTITY	PROFIT OBJ 1987 DOLLARS	CUMULATIVE TO DATE ACTUAL 1987 QUANTITY	CUMULATIVE TO DATE ACTUAL 1987 DOLLARS	CUMULATIVE TO DATE ACTUAL 1986 QUANTITY	CUMULATIVE TO DATE ACTUAL 1986 DOLLARS	1987 CUMULATIVE ACT OVER(UNDER) QUANTITY	1987 CUMULATIVE ACT OVER(UNDER) DOLLARS
PROC SUPP-NONCLASSIFIED												
006 0136	METHANOL	GALS	.1	.1			6.8	1.8	1.2	1.2	6.8	1.8
006 0387	MOLECULAR SEIVES	LBS					22.3	19.1	48.1	74.5	22.3	19.1
006 0454	MORPHOLINE	LBS					8.3	10.0	3.2	3.7	8.3	10.0
006 0120	N-477 CATALYST	LBS							6.6	5.1		
006 0520	NALCO D5163	LBS					9.6	10.7	12.4	14.8	9.6	10.7
006 0519	NALCO 1700								1.9	3.6		
006 0524	NALCO 1701	GALS					.5	.8	.6	1.0	.5	.8
006 0669	NALCO 19	LBS	4.3	3.3			40.4	28.1	10.6	8.4	40.4	28.1
006 0193	NALCO 2RB431	LBS	3.5	5.1			36.6	54.5	60.8	87.4	36.6	54.5
006 0264	NALCO 264	LBS								.2		
006 0244	NALCO 356	LBS	4.1	7.1			46.6	79.7	28.8	48.7	46.6	79.7
006 0280	NALCO 5163	GALS.	1.9	2.2			5.2	6.0			5.2	6.0
006 0231	NALCO 5166	LBS	1.6	4.1			16.4	40.4	13.3	33.4	16.4	40.4
006 0597	NALCO 5180	LBS					4.7	11.2			4.7	11.2
006 0493	NALCO 5196						6.8	10.2	14.8	21.4	6.8	10.2
006 0516	NALCO 5198	LBS							3.2	4.6		
006 200	NALCO 5265	LBS						1.4				1.4
006 0353	NALCO 5553	LBS					26.8	29.2			26.8	29.2
006 0599	NALCO 5742	LBS							2.1	2.8		
006 0507	NALCO 7200	LBS	3.9	4.8			54.9	66.0	54.8	65.2	54.9	66.0
006 0486	NALCO 8184	LBS							.5	.7		
6 490	NALCO 8252	LBS							1.3	1.5		
006 0265	NALCO 8263	LBS	21.5	13.9			213.3	137.5	107.7	68.9	213.3	137.5
006 0354	NALCO 85RB253		.8	1.8			5.4	12.8			5.4	12.8
006 0616	NALCO 85RP124	LBS					4.0	5.2	.3	3.2	4.0	5.2
006 0351	NALCO 87RE010	LBS					4.5	4.7			4.5	4.7
006 0137	NITROGEN	CU FT	44.6	86.9			592.6	532.5	819.6	945.1	592.6	532.5
006 0327	NITROGEN CYLINDERS						.1	.3	.1	.2	.1	.3
006 0685	OXYGEN	LBS	.8	31.3			13.9	530.2	20.9	895.5	13.9	530.2
006 0705	OXYGEN P/L FEE	LBS		4.3				51.3		51.3		51.3
006 0013	PLATINUM	TR OZ						38.4		34.2		38.4
006 0303	POTASSIUM PERMANGANATE	LBS					7.9	13.1	1.1	1.6	7.9	13.1
006 0652	PROX SVERS	LBS								1.0		
006 0703	SHELL CATALYST HPS 544	LBS					4.5	9.1			4.5	9.1
006 0503	SHELL 514 1/3" SPHERE	LBS	1.8	4.0			14.1	29.9	24.8	56.8	14.1	29.9
006 0392	SILICA GEL	LBS					1.8	3.4			1.8	3.4
006 0024	SODA ASH	LBS	.2				4.1	.6	1.7	.3	4.1	.6
006 0053	SODIUM CHLORIDE (SALT)	LBS					748.8	13.4	785.8	14.7	748.8	13.4
006 0459	SODIUM HYPOCHLORITE	LBS	1.0	.1			6.5	1.0	2.0	.1	6.5	1.0
006 0050	SODIUM SULFITE - HYDRO	LBS					.5	.4	.8	.5	.5	.4
006 0018	SODIUM-MONOSODIUM PHOS	LBS	36.4	22.6			537.8	352.3	501.4	344.7	537.8	352.3
006 1118	SPT HOUDRY H2-1 FCC CAT	LBS								14.1		
006 0020	SULPHUR	LBS						.1				.1
006 0022	SULPHUR DIOXIDE	LBS	2.0	.7			19.4	3.6	6.0	2.1	19.4	3.6

SAL 000005397

LAKE CHARLES REFINERY

PROCESSING SUPPLIES - OTHER DETAIL - SCHEDULE C
(IN THOUSANDS)

TM-FTR	DESCRIPTION		MONTH DECEMBER 1987 QUANTITY	MONTH DECEMBER 1987 DOLLARS	PROFIT OBJ 1987 QUANTITY	PROFIT OBJ 1987 DOLLARS	CUMULATIVE TO DATE ACTUAL 1987 QUANTITY	CUMULATIVE TO DATE ACTUAL 1987 DOLLARS	CUMULATIVE TO DATE ACTUAL 1986 QUANTITY	CUMULATIVE TO DATE ACTUAL 1986 DOLLARS	-1987 CUMULATIVE- ACT OVER(UNDER) PC QUANTITY	-1987 CUMULATIVE- ACT OVER(UNDER) PC DOLLARS
PROC SUPP-NONCLASSIFIED												
06 0602	TRET-O-LITE K437	GALS	5.3	5.5			45.1	44.2	5.5	47.8	45.1	44.2
06 0612	TRET-O-LITE DS 415	GAL					1.4	1.8			1.4	1.8
06 0613	TRET-O-LITE K450	GAL	7.4	11.1			44.2	58.0	4.3	51.1	44.2	58.0
06 1186	TRET-O-LITE AF-61						37.9	56.5	98.5	149.2	37.9	56.5
06 0617	TRETOLITE K-456	LBS	1.3	1.8			13.3	17.4			13.3	17.4
6 702	TRETOLITE DS 4056	GAL	2.8	2.6			30.0	25.9	3.3	23.4	30.0	25.9
6 704	TRETOLITE DS504								.9-	.9-		
06 0712	TRETOLITE PET40000		2.6	4.6			38.3	66.2	6.4	12.1	38.3	66.2
06 0718	TRETOLITE 4010	GAL					40.2	70.7			40.2	70.7
06 0046	TRIETHYLENEGLYCOL		7.5	2.1			35.2	9.8			35.2	9.8
06 0468	TYSOL WW50	LBS					15.0	8.0	29.2	15.0	15.0	8.0
06 0469	UCARSOL-MDEA	LBS					620.2	783.0	1,139.0	1,447.7	620.2	783.0
06 0471	UCARSON HS - 101	LBS	44.0	51.0			44.0	51.0			44.0	51.0
06 0106	VAN DRI-O-LITE	LBS					.1		.1-		.1	
06 0123	ZEOLITE AMBERLITE 120	LBS	11.2	18.3			11.2	18.3			11.2	18.3
TOTAL PROC SUPP-NONCLASSIFIED				1,337.1				14,024.0		13,101.2		14,024.0
PROC SUPP-CORR INH (PROC)												
06 0485	BETZ 562	LBS								.1		
06 0601	TRET-O-LITE K-430-W	GALS	1.8	2.4			27.3	33.7	2.3	24.0	27.3	33.7
TOTAL PROC SUPP-CORR INH (PROC)				2.4				33.7		24.2		33.7
TOTAL CLASSIFIED				2.4				33.7		24.2		33.7
TOTAL PROCESSING SUPPLIES				1,339.6				14,057.7		13,125.4		14,057.7
PER BBL CRUDE CHARGE				.2930				.2821		.2468		.2821

SAL 000005398

	YTD 1987 INVENTORY AND R/S					YTD 1987 PRODUCTION					
	OPENING BBLS	CLOSING BBLS	CHANGE BBLS	PURCHASE MBBLS	SALE MBBLS	VOLUME MBBLS	VOL %	WEIGHT MMLBS	WT %	LOADED BBLS	NET OUTPUT MBBLS
*** CHARGES ****											
RUDE OIL											
SWEET CRUDE											
CONOCO PIPELN-RF	62931.	55260.	-7671.	6959.1	0.0	6966.8	13.4	1998.7	12.3	0.	0.0
DOMESTIC BRGE-RF	124005.	118502.	-5503.	2218.1	0.0	2223.6	4.3	643.4	4.0	0.	0.0
TEXACO PIPELN-RF	259235.	90967.	-168268.	5474.9	0.0	5643.2	10.9	1674.3	10.3	0.	0.0
CONDENSATE-RF	1838.	44150.	42312.	235.8	0.0	193.5	0.4	54.2	0.3	0.	0.0
CABINDA-SWEET-RF	0.	0.	0.	1781.3	0.0	1781.3	3.4	537.2	3.3	0.	0.0
SUBTOTAL SWEET CRUDE	448009.	308879.	-139130.	16669.2	0.0	16808.3	32.4	4907.9	30.2	0.	0.0
SOUR CRUDE											
F-10	0.	0.	0.	465.0	0.0	465.0	0.9	152.4	0.9	0.	0.0
BCF13 VENEZUE-RF	0.	13179.	13179.	2512.1	0.0	2498.9	4.8	848.9	5.2	0.	0.0
T J PESADO-RF	41560.	0.	-41560.	14.1	0.0	55.6	0.1	19.3	0.1	0.	0.0
MAYA MEXICAN-RF	76914.	245587.	168673.	11278.1	0.0	11109.4	21.4	3579.7	22.0	0.	0.0
MEREY VENEZU-RF	48921.	127034.	78113.	5126.3	0.0	5048.2	9.7	1686.2	10.4	0.	0.0
GULF OF SUEZ-RF	0.	0.	0.	41.0	0.0	41.0	0.1	12.5	0.1	0.	0.0
ORIENTE EQUAD-RF	0.	0.	0.	394.7	0.0	394.7	0.8	121.6	0.7	0.	0.0
MENEMOTA VENZ-RF	0.	4433.	4433.	720.8	0.0	716.3	1.4	233.4	1.4	0.	0.0
ALASKAN N/S-RF	0.	84243.	84243.	2192.3	0.0	2108.0	4.1	659.2	4.0	0.	0.0
PILON VENEZU-RF	97283.	65208.	-32075.	6764.1	0.0	6796.2	13.1	2324.6	14.3	0.	0.0
E. TEXAS SOUR-RF	19511.	17244.	-2267.	2717.5	0.0	2719.8	5.2	841.4	5.2	0.	0.0
WYOMING SOUR-RF	0.	0.	0.	379.8	0.0	379.8	0.7	117.0	0.7	0.	0.0
IRAQ LR-RF	0.	0.	0.	301.9	0.0	301.9	0.6	99.6	0.6	0.	0.0
GEISUM EGYPT-RF	0.	0.	0.	384.4	0.0	384.6	0.7	127.1	0.8	0.	0.0
SUBTOTAL SOUR CRUDE	284189.	556928.	272739.	33292.1	0.0	33019.4	63.6	10822.9	66.5	0.	0.0
TAL CRUDE OIL	732198.	865807.	133609.	49961.3	0.0	49827.7	96.0	15730.8	96.6	0.	0.0
RUN STOCK											
NAPHTHA C/S-RF	34017.	18209.	-15808.	1861.0	0.0	1876.8	3.6	492.3	3.0	0.	0.0
DIST. C/S-RF	6017.	2152.	-3865.	181.5	0.0	185.3	0.4	55.2	0.3	0.	0.0
TAL RERUN STOCK	40034.	20361.	-19673.	2042.4	0.0	2062.1	4.0	547.5	3.4	0.	0.0
TAL CHARGES	772232.	886168.	113936.	52003.7	0.0	51889.8	100.0	16278.3	100.0	0.	0.0
** PRODUCTS ****											

SAL 000005399

	YTD 1987 INVENTORY AND R/S					YTD 1987 PRODUCTION					
	OPENING BBLS	CLOSING BBLS	CHANGE BBLS	PURCHASE MBBLS	SALE MBBLS	VOLUME MBBLS	VOL %	WEIGHT MMLBS	WT %	LOADED BBLS	NET OUTPUT MBBLS
NAT GAS LIQUIDS											
REF PROPANE	0.	0.	0.	0.0	1235.8	1235.8	2.4	217.5	1.3	0.	1235.8
REF BUTANE	0.	0.	0.	267.6	6.9	-260.8	-0.5	-51.8	-0.3	0.	6.9
REF ISOBUTANE	0.	0.	0.	698.1	0.0	-698.1	-1.3	-137.5	-0.8	0.	0.0
BUTANE-BUTYLENE	4116.	4637.	521.	0.0	0.0	0.5	0.0	0.1	0.0	0.	0.5
REF ISOPENTANE	0.	0.	0.	101.2	0.0	-101.2	-0.2	-22.1	-0.1	0.	0.0
DEN CASINGHEAD	0.	0.	0.	290.6	0.0	-290.6	-0.6	-66.7	-0.4	0.	0.0
TOTAL NAT GAS LIQUIDS	4116.	4637.	521.	1357.6	1242.7	-114.4	-0.2	-60.5	-0.4	0.	1243.2
MOTOR FUELS -											
FNSHD REGULAR											
REG GASOLINE	117321.	122605.	5284.	0.0	4624.6	4629.9	8.9	1195.4	7.3	0.	4629.9
LOCAL REGULAR	12372.	33204.	20832.	0.0	814.0	834.9	1.6	217.7	1.3	0.	834.9
SUBTOTAL FNSHD REGULAR	129693.	155809.	26116.	0.0	5438.7	5464.8	10.5	1413.1	8.7	0.	5464.8
FNSHD UNLEADED											
UNLD GASOLINE	86169.	130197.	44028.	0.0	8317.8	8361.9	16.1	2145.1	13.2	0.	8361.9
LOCAL UNLEADED	14374.	31194.	16820.	0.0	1331.0	1347.8	2.6	348.4	2.1	0.	1347.8
SUBTOTAL FNSHD UNLEADED	100543.	161391.	60848.	0.0	9648.8	9709.7	18.7	2493.5	15.3	0.	9709.7
FNSHD SUPR UNLD											
SUPR UNLEADED	112419.	79520.	-32899.	0.0	4614.6	4581.7	8.8	1207.6	7.4	0.	4581.7
LOCAL SUPR UNLD	22477.	36306.	13829.	0.0	603.8	617.6	1.2	161.7	1.0	0.	617.6
SUBTOTAL FNSHD SUPR UNLD	134896.	115826.	-19070.	0.0	5218.4	5199.3	10.0	1369.4	8.4	0.	5199.3
GASO. BASE STOCK											
PRYO GASOLINE	0.	0.	0.	129.4	0.0	-129.4	-0.2	-35.0	-0.2	0.	0.0
BASE ST RUN GASO	20665.	25241.	4576.	0.0	0.0	4.6	0.0	1.5	0.0	0.	4.6
DSR GASOLINE	0.	993.	993.	0.0	0.0	1.0	0.0	0.3	0.0	0.	1.0
BASE FCC GASO	26273.	63642.	37369.	0.0	0.0	37.4	0.1	9.6	0.1	0.	37.4
BASE REFORMATE	67594.	49787.	-17807.	0.0	0.0	-17.8	0.0	-5.0	0.0	0.	-17.8
ALKYLATE	23033.	10057.	-12976.	0.0	0.0	-13.0	0.0	-3.2	0.0	0.	-13.0
SUBTOTAL GASO. BASE STOCK	137565.	149720.	12155.	129.4	0.0	-117.2	-0.2	-31.8	-0.2	0.	12.2
NAPHTHA STOCKS:											
MOLEX GASOLINE	0.	0.	0.	423.3	0.0	-423.3	-0.8	-114.5	-0.7	0.	0.0
SWEET NAPHTHA	27387.	11080.	-16307.	0.0	0.0	-16.3	0.0	-4.2	0.0	0.	-16.3
SOUR NAPHTHA	152574.	96506.	-56068.	0.0	235.5	179.4	0.3	47.1	0.3	0.	179.4
CRACKED NAPHTHA	28365.	1232.	-27133.	0.0	0.0	-27.1	-0.1	-7.1	0.0	0.	-27.1
SUBTOTAL NAPHTHA STOCKS	208326.	108818.	-99508.	423.3	235.5	-287.3	-0.6	-78.8	-0.5	0.	136.0
TOTAL MOTOR FUELS	711023.	691564.	-19459.	552.6	20541.4	19969.3	38.5	5165.4	31.7	0.	20521.9

SAL 000005400

	YTD 1987 INVENTORY AND R/S					YTD 1987 PRODUCTION					
	OPENING BBLS	CLOSING BBLS	CHANGE BBLS	PURCHASE MBBLS	SALE MBBLS	VOLUME MBBLS	VOL %	WEIGHT MMLBS	WT %	LOADED BBLS	NET OUTPUT MBBLS
IGHT FUEL OILS											
JET 50/KEROSENE											
JET 50 FUEL	63985.	90554.	26569.	0.0	4025.4	4051.9	7.8	1159.1	7.1	2045.	4051.9
LOCAL JET 50	3537.	3256.	-281.	0.0	71.1	70.8	0.1	20.2	0.1	0.	70.8
CONOCO LVT OIL	1721.	18573.	16852.	0.0	96.2	113.1	0.2	32.4	0.2	1245.	113.1
MOLEX RAFFINATE	6208.	5885.	-323.	2559.9	85.5	-2474.6	-4.8	-705.8	-4.3	0.	85.2
KEROSENE	0.	0.	0.	60.0	0.0	-60.0	-0.1	-17.0	-0.1	0.	0.0
SUBTOTAL JET 50/KEROSENE	75451.	118268.	42817.	2619.9	4278.3	1701.2	3.3	488.9	3.0	3290.	4321.1
DIESEL & #2 FUEL											
FUNGIBLE DIESEL	135863.	157009.	21146.	0.0	1189.1	1210.2	2.3	362.6	2.2	0.	1210.2
LOCAL NO.2 OIL	21462.	24494.	3032.	0.0	18707.0	18710.0	36.1	5651.0	34.7	0.	18710.0
VIRGIN DIESEL	0.	0.	0.	0.0	349.3	349.3	0.7	104.2	0.6	0.	349.3
DISTILLATE BASE	205204.	183886.	-21318.	0.0	0.0	-21.3	0.0	-6.6	0.0	0.	-21.3
SUBTOTAL DIESEL & #2 FUEL	362529.	365389.	2860.	0.0	20245.4	20248.2	39.0	6111.2	37.5	0.	20248.2
MOLEX FEEDSTOCK											
MOLEX FEED	0.	0.	0.	0.0	2105.4	2105.4	4.1	594.3	3.7	0.	2105.4
BAYOU FEEDSTOCK											
LSR GASOLINE	0.	0.	0.	0.0	398.8	398.8	0.8	94.2	0.6	0.	398.8
LT BLEND F/S	0.	0.	0.	0.0	615.8	615.8	1.2	147.8	0.9	0.	615.8
HVY BLEND F/S	56310.	0.	-56310.	0.0	611.9	555.5	1.1	169.1	1.0	0.	555.5
SYN. CONDENSATE	17764.	36700.	18936.	0.0	0.0	18.9	0.0	4.3	0.0	0.	18.9
SUBTOTAL BAYOU FEEDSTOCK	74074.	36700.	-37374.	0.0	1626.5	1589.1	3.1	415.5	2.6	0.	1589.1
TAL LIGHT FUEL OILS	512054.	520357.	8303.	2619.9	28255.5	25643.9	49.4	7609.9	46.7	3290.	28263.8
KS IN PROCESS											
LT GAS OILS											
CUTTER STOCK	69250.	0.	-69250.	216.5	2107.6	1821.9	3.5	487.0	3.0	0.	2038.4
FCC CYCLE OIL	27424.	1754.	-25670.	0.0	0.0	-25.7	0.0	-8.3	-0.1	0.	-25.7
CRACKED DIST	156790.	8958.	-147832.	0.0	0.0	-147.8	-0.3	-45.7	-0.3	0.	-147.8
CYC HEATING OIL	0.	0.	0.	0.0	104.1	104.1	0.2	33.3	0.2	0.	104.1
SUBTOTAL LT GAS OILS	253464.	10712.	-242752.	216.5	2211.7	1752.5	3.4	466.3	2.9	0.	1968.9
HVY GAS OILS											
GAS OIL	0.	0.	0.	8.0	0.0	-8.0	0.0	-2.5	0.0	0.	0.0
HV COK GAS OIL	120185.	341352.	221167.	0.0	0.0	221.2	0.4	72.7	0.4	0.	221.2
SWT FCC CHG STK	240330.	103495.	-136835.	0.0	0.0	-136.8	-0.3	-43.0	-0.3	0.	-136.8
THERMAL CHARGE	5463.	16267.	10804.	0.0	0.0	10.8	0.0	4.1	0.0	0.	10.8
DESUL. SLURRY	25966.	0.	-25966.	0.0	0.0	-26.0	-0.1	-9.2	-0.1	0.	-26.0
SUBTOTAL HVY GAS OILS	391944.	461114.	69170.	8.0	0.0	61.2	0.1	22.0	0.1	0.	69.2

SAL 000005401

	OPENING BBLS	CLOSING BBLS	CHANGE BBLS	PURCHASE MBBLS	SALE MBBLS	VOLUME MBBLS	VOL %	WEIGHT MMLBS	WT %	LOADED BBLS	NET OUTPUT MBBLS
	-------- YTD 1987 INVENTORY AND R/S --------					----- YTD 1987 PRODUCTION -----					
RESIDUUMS											
SLURRY OIL	76555.	118012.	41457.	40.7	3.8	4.6	0.0	5.4	0.0	0.	45.2
PURCH SLURRY	0.	0.	0.	120.8	0.0	-120.8	-0.2	-45.1	-0.3	0.	0.0
KOCH SLURRY	0.	0.	0.	172.3	0.0	-172.3	-0.3	-65.9	-0.4	0.	0.0
SOHIO SLURRY	0.	0.	0.	565.2	0.0	-565.2	-1.1	-214.8	-1.3	0.	0.0
CHEVRON SLURRY	0.	0.	0.	80.1	0.0	-80.1	-0.2	-29.4	-0.2	0.	0.0
CHAMPLIN SLURRY	0.	0.	0.	238.9	0.0	-238.9	-0.5	-87.4	-0.5	0.	0.0
ANODE VAC RESID	210833.	210346.	-487.	1067.2	300.7	-767.0	-1.5	-266.1	-1.6	0.	300.2
PYRO TAR	35637.	103961.	68324.	413.4	0.0	-345.1	-0.7	-131.6	-0.8	52726.	68.3
THERMAL TAR	6996.	42398.	35402.	0.0	0.0	35.4	0.1	13.6	0.1	0.	35.4
L S THERMAL TAR	0.	31162.	31162.	0.0	0.0	31.2	0.1	11.9	0.1	0.	31.2
L S THERMAL CHG	0.	1833.	1833.	0.0	0.0	1.8	0.0	0.6	0.0	0.	1.8
VACUUM RESIDUUM	0.	0.	0.	0.0	253.0	253.0	0.5	92.3	0.6	0.	253.0
HOT RESID	198680.	283717.	85037.	0.0	0.0	85.0	0.2	29.5	0.2	0.	85.0
SUBTOTAL RESIDUUMS	528701.	791429.	262728.	2698.7	557.5	-1878.4	-3.6	-687.0	-4.2	52726.	820.2
SLOP OILS											
ARO DISTILLATE	0.	0.	0.	81.2	0.0	-81.2	-0.2	-23.5	-0.1	0.	0.0
LCCP RETURNS	0.	0.	0.	327.3	0.0	-327.3	-0.6	-101.1	-0.6	0.	0.0
RERUN	12189.	1130.	-11059.	0.0	0.0	-11.1	0.0	-3.2	0.0	0.	-11.1
SLOP	18877.	12162.	-6715.	9.4	0.0	-16.1	0.0	-4.7	0.0	0.	-6.7
SABINE HAD	0.	13052.	13052.	16.6	0.0	-3.6	0.0	-1.1	0.0	0.	13.1
SUBTOTAL SLOP OILS	31066.	26344.	-4722.	434.5	0.0	-439.2	-0.8	-133.7	-0.8	0.	-4.7
TOTAL STKS IN PROCESS	1205175.	1289599.	84424.	3357.6	2769.2	-504.0	-1.0	-332.4	-2.0	52726.	2853.6
HEAVY FUEL OILS											
NO. 1 HCGO	2508.	41692.	39184.	0.0	811.4	850.6	1.6	318.5	2.0	0.	850.6
201 LCCHT											
POOL 5											
GRN HI 5 FUEL TONS	0.	121310.	121310.	121.3	0.0	0.0	0.0	0.0	0.0	0.	121.3
202 BT - 1 SILOS											
POOL 2											
NORMAL PREMIUM TONS	0.	2535.	2535.	2.5	0.0	0.0	0.0	0.0	0.0	0.	2.5
POOL 3											
NORMAL RECARB TONS	0.	75.	75.	0.1	0.0	0.0	0.0	0.0	0.0	0.	0.1
TOTAL 202 BT - 1 SILOS	0.	2610.	2610.	2.6	0.0	0.0	0.0	0.0	0.0	0.	2.6

SAL 000005402

		YTD 1987 INVENTORY AND R/S					YTD 1987 PRODUCTION					
		OPENING BBLS	CLOSING BBLS	CHANGE BBLS	PURCHASE MBBLS	SALE MBBLS	VOLUME MBBLS	VOL %	WEIGHT MMLBS	WT %	LOADED BBLS	NET OUTPUT MBBLS
03 PORT OF LC												
POOL 1												
LOW S RECARB	TONS	0.	620.	620.	0.6	0.0	0.0	0.0	0.0	0.0	0.	0.6
POOL 2												
SUPER REG COKE	TONS	0.	2576.	2576.	2.6	0.0	0.0	0.0	0.0	0.0	0.	2.6
INTR GRAPHITE	TONS	0.	6223.	6223.	6.2	0.0	0.0	0.0	0.0	0.0	0.	6.2
NORMAL PREMIUM	TONS	0.	321.	321.	0.3	0.0	0.0	0.0	0.0	0.0	0.	0.3
SUBTOTAL POOL 2		0.	9120.	9120.	9.1	0.0	0.0	0.0	0.0	0.0	0.	9.1
POOL 3												
NORMAL RECARB	TONS	0.	9269.	9269.	9.3	0.0	0.0	0.0	0.0	0.0	0.	9.3
POOL 5												
COKE FINES	TONS	0.	233.	233.	0.0	0.0	0.2	0.0	0.5	0.0	0.	0.2
OTAL 203 PORT OF LC		0.	19242.	19242.	19.0	0.0	0.2	0.0	0.5	0.0	0.	19.2
04 REFINERY												
POOL 1												
CAL PREM COKE	TONS	3749.	710.	-3039.	0.0	43.5	40.5	0.1	80.9	0.5	0.	40.5
LS RECARB CK	TONS	0.	0.	0.	0.0	16.6	16.6	0.0	33.1	0.2	0.	16.6
SUBTOTAL POOL 1		3749.	710.	-3039.	0.0	60.0	57.0	0.1	114.0	0.7	0.	57.0
POOL 2												
CAL NOR PRM COKE	TONS	0.	715.	715.	0.0	4.3	5.0	0.0	10.1	0.1	0.	5.0
INTR GRAPHITE	TONS	0.	0.	0.	0.0	1.0	1.0	0.0	2.0	0.0	0.	1.0
SUBTOTAL POOL 2		0.	715.	715.	0.0	5.4	6.1	0.0	12.1	0.1	0.	6.1
POOL 3												
NORMAL RECARB	TONS	2757.	0.	-2757.	0.0	21.6	18.9	0.0	37.8	0.2	0.	18.9
LCH ANODE	TONS	716.	0.	-716.	0.0	54.5	53.8	0.1	107.6	0.7	0.	53.8
CAL FUEL COKE	TONS	0.	0.	0.	0.0	11.1	11.1	0.0	22.2	0.1	0.	11.1
SUBTOTAL POOL 3		3473.	0.	-3473.	0.0	87.3	83.8	0.2	167.6	1.0	0.	83.8
POOL 4												
GREEN PREM COKE	TONS	1.	3100.	3099.	0.0	0.0	3.1	0.0	6.2	0.0	0.	3.1
GRN NORM PREM CK	TONS	0.	822.	822.	0.0	0.0	0.8	0.0	1.6	0.0	0.	0.8
GRN LS RECARB CK	TONS	0.	1.	1.	0.0	0.0	0.0	0.0	0.0	0.0	0.	0.0
GRN NORM RECARB	TONS	0.	3190.	3190.	0.0	0.0	3.2	0.0	6.4	0.0	0.	3.2
GRN INTR GRAPH	TONS	1.	1.	0.	0.0	0.0	0.0	0.0	0.0	0.0	0.	0.0
GREEN LCH ANODE	TONS	4458.	14867.	10409.	0.0	25.2	35.6	0.1	71.2	0.4	0.	35.6
GRN PUR ANODE	TONS	0.	0.	0.	7.0	0.0	-7.0	0.0	-14.1	-0.1	0.	0.0
SUBTOTAL POOL 4		4460.	21981.	17521.	7.0	25.2	35.6	0.1	71.3	0.4	0.	42.7

SAL 000005403

		YTD 1987 INVENTORY AND R/S					YTD 1987 PRODUCTION					
		OPENING BBLS	CLOSING BBLS	CHANGE BBLS	PURCHASE MBBLS	SALE MBBLS	VOLUME MBBLS	VOL %	WEIGHT MMLBS	WT %	LOADED BBLS	NET OUTPUT MBBLS
POOL 5												
GRN HI S FUEL	TONS	4365.	5323.	958.	0.0	786.6 F	787.6	1.5	1575.2	9.7	0.	787.6
COKE FINES	TONS	0.	0.	0.	0.0	0.4 F	0.4	0.0	0.9	0.0	0.	0.4
SUBTOTAL POOL 5		4365.	5323.	958.	0.0	787.1	788.0	1.5	1576.1	9.7	0.	788.0
TOTAL 204 REFINERY		16047.	28729.	12682.	7.0	964.9	970.5	1.9	1941.1	11.9	0.	977.6
205 WOODCHIP PAD												
POOL 5												
GRN HI S FUEL	TONS	0.	13335.	13335.	0.0	0.0	13.3	0.0	26.7	0.2	0.	13.3
206 TRANSPORT												
POOL 1												
X COKE	TONS	0.	3352.	3352.	0.0	0.0	3.4	0.0	6.7	0.0	0.	3.4
POOL 2												
NORMAL PREMIUM	TONS	0.	1324.	1324.	1.0	0.0	0.4	0.0	0.7	0.0	0.	1.3
TOTAL 206 TRANSPORT		0.	4676.	4676.	1.0	0.0	3.7	0.0	7.4	0.0	0.	4.7
207 PORT ART TML												
POOL 5												
GRN HI S FUEL	TONS	0.	12654.	12654.	0.0	0.0	12.7	0.0	25.3	0.2	0.	12.7
SULFUR PRODUCTS												
SULFUR												
SULFUR-TONS	TONS	919.	723.	-196.	0.0	79.1	78.9	0.2	157.8	1.0	173.	78.9
SULFUR AS H2S	TONS	0.	0.	0.	0.0	23.2	23.2	0.0	46.4	0.3	0.	23.2
SUBTOTAL SULFUR		919.	723.	-196.	0.0	102.3	102.1	0.2	204.2	1.3	173.	102.1
FINISHED ACID												
98% ACID	100%	1787.	3161.	1374.	3.7	3.6	1.4	0.0	2.7	0.0	0.	5.0
ACID CONSUMED	100%	0.	0.	0.	0.0	0.4	0.4	0.0	0.7	0.0	0.	0.4
SUBTOTAL FINISHED ACID		1787.	3161.	1374.	3.7	4.0	1.7	0.0	3.4	0.0	0.	5.4
SPENT ACID												
AK SPT ACID	100%	1378.	1289.	-89.	0.0	13.1	13.0	0.0	26.1	0.2	0.	13.0
TOTAL SULFUR PRODUCTS		4084.	5173.	1089.	3.7	119.4	116.9	0.2	233.7	1.4	173.	120.5

SAL 000005404

		YTD 1987 INVENTORY AND R/S					YTD 1987 PRODUCTION					
		OPENING BBLS	CLOSING BBLS	CHANGE BBLS	PURCHASE MBBLS	SALE MBBLS	VOLUME MBBLS	VOL %	WEIGHT MMLBS	WT %	LOADED BBLS	NET OUTPUT MBBLS
HYDROGEN												
VISTA EXCHANGE												
VISTA IMPORT H2	FOE	0.	0.	0.	592.0	0.0	-592.0	-1.1	-97.5	-0.6	0.	0.0
FUEL TO VISTA	FOE	0.	0.	0.	0.0	973.8	973.8	1.9	277.0	1.7	0.	973.8
SUBTOTAL VISTA EXCHANGE		0.	0.	0.	592.0	973.8	381.8	0.7	179.4	1.1	0.	973.8
HYDROGEN												
CITIES H2	FOE	0.	0.	0.	0.0	567.1	567.1	1.1	108.2	0.7	0.	567.1
JUPITER HYDROGEN	FOE	0.	0.	0.	364.5	0.0	-364.5	-0.7	-38.6	-0.2	0.	0.0
SUBTOTAL HYDROGEN		0.	0.	0.	364.5	567.1	202.7	0.4	69.7	0.4	0.	567.1
TOTAL HYDROGEN		0.	0.	0.	956.5	1540.9	584.4	1.1	249.1	1.5	0.	1540.9
MISCELLANEOUS												
CIT CON EXCHANGE												
TOPPED CRUDE		0.	0.	0.	0.0	3991.0	3991.0	7.7	1282.8	7.9	0.	3991.0
CC GAS OIL		0.	0.	0.	781.6	0.0	-781.6	-1.5	-235.6	-1.4	0.	0.0
CC FURFURAL EXT		0.	0.	0.	781.8	0.0	-781.8	-1.5	-261.0	-1.6	0.	0.0
CC INTERMED EXT		0.	0.	0.	190.5	0.0	-190.5	-0.4	-63.7	-0.4	0.	0.0
COKER NAPHTHA		0.	0.	0.	241.7	236.2	-5.5	0.0	0.0	0.0	0.	236.2
CC BR.STK. EXT		0.	0.	0.	262.1	0.0	-262.1	-0.5	-93.6	-0.6	0.	0.0
CC RESIDUUM		0.	0.	0.	697.5	0.0	-697.5	-1.3	-238.1	-1.5	0.	0.0
SUBTOTAL CIT CON EXCHANGE		0.	0.	0.	2955.3	4227.2	1271.9	2.5	390.8	2.4	0.	4227.2
FUEL PRODUCTION												
GILLIS FUEL	FOE	0.	0.	0.	952.8	0.0	-952.8	-1.8	-260.4	-1.6	0.	0.0
FUEL CONSUMED	FOE	0.	0.	0.	0.0	2785.7	2785.7	5.4	753.8	4.6	0.	2785.7
UNRES FUEL LOSS	FOE	0.	0.	0.	0.0	0.0	26.9	0.1	7.9	0.0	0.	26.9
SUBTOTAL FUEL PRODUCTION		0.	0.	0.	952.8	2785.7	1859.9	3.6	501.3	3.1	0.	2812.7
LOSSES												
REF PROC LOSS		0.	0.	0.	0.0	0.0	1791.9	3.5	336.8	2.1	0.	1791.9
SULFUR PROC LOSS	TONS	0.	0.	0.	0.0	0.0	-10.3	0.0	-20.6	-0.1	0.	-10.3
COKE MOISTURE	TONS	0.	0.	0.	0.0	0.0	-60.2	-0.1	-120.4	-0.7	0.	-60.2
COKE CONSUMED	TONS	0.	0.	0.	0.0	0.0	137.2	0.3	274.3	1.7	0.	137.2
TOTAL FLARE	FOE	0.	0.	0.	0.0	0.0	224.7	0.4	72.0	0.4	0.	224.7
UNRES CHG LOSS		0.	0.	0.	0.0	0.0	0.0	0.0	-21.1	-0.1	0.	0.0
UNRES PROD LOSS		0.	0.	0.	0.0	0.0	-893.2	-1.7	-326.1	-2.0	0.	-893.2
ATMOSPHERE LOSS		0.	0.	0.	0.0	0.0	20.7	0.0	6.5	0.0	0.	20.7
SUBTOTAL LOSSES		0.	0.	0.	0.0	0.0	1210.9	2.3	201.4	1.2	0.	1210.9
TOTAL MISCELLANEOUS		0.	0.	0.	3908.1	7013.0	4342.5	8.4	1093.5	6.7	0.	8250.7
TOTAL PRODUCTS		2455007.	2755578.	300571.	12906.9	63258.3	51889.7	100.0	16278.2	100.0	56189.	64796.6

PROCESSING SUPPLIES

SAL 000005405

		YTD 1987 INVENTORY AND R/S					YTD 1987 PRODUCTION					
		OPENING BBLS	CLOSING BBLS	CHANGE BBLS	PURCHASE MBBLS	SALE MBBLS	VOLUME MBBLS	VOL %	WEIGHT MMLBS	WT %	LOADED BBLS	NET OUTPUT MBBLS
MISCELLANEOUS												
PROC. SUPPLIES												
TEL	LBS	40000.	68880.	28880.	168.9	0.0	140.0	0.3	0.1	0.0	0.	0.0
MMT	LBS	16240.	36375.	20135.	163.0	0.0	142.8	0.3	0.1	0.0	0.	0.0
TOTAL MISCELLANEOUS		56240.	105255.	49015.	331.8	0.0	282.8	0.5	0.3	0.0	0.	0.0

VOLUME UNITS OF MEASUREMENT:

BARREL FUEL OIL EQUIVALENT(BFOE)	FOE
EQUIVALENT LIQUID BARRELS	ELB
SHORT TONS	TONS
TONS 100% SULFURIC ACID	100%
GALLONS	GALS
POUNDS	LBS
THOUSANDS OF POUNDS	MLBS

SAL 00005406

**** UNIT 03 - NO. 3 CTU & VAC HAS BEEN ON STREAM 31.0 DAYS IN DECEMBER AND 365.00 DAYS TO DATE THIS YEAR ****

STREAM		DECEMBER VOLUME BBLS	PCT	DECEMBER WEIGHT MLBS	PCT	YEAR TO DATE VOLUME MBBLS	PCT	YEAR TO DATE WEIGHT MMLBS	PCT
**** CHARGES ****									
TEXACO PIPELINE		5627.	0.2	1626.	0.1	173.5	0.4	50.0	0.4
CONDENSATE		0.	0.0	0.	0.0	121.4	0.3	33.3	0.3
CABINDA-SWEET		0.	0.0	0.	0.0	1775.0	4.4	537.3	4.2
DOMESTIC BARGE		0.	0.0	0.	0.0	39.1	0.1	11.4	0.1
ALASKAN N/SLPE		572136.	16.0	179055.	15.6	2061.6	5.2	642.8	5.0
F-10		25804.	0.7	8492.	0.7	465.0	1.2	152.9	1.2
E.TEXAS SOUR		239969.	6.7	74238.	6.5	2719.4	6.8	842.7	6.6
WYOMING SOUR		0.	0.0	0.	0.0	379.8	1.0	122.5	1.0
IRAQ LR		263009.	7.4	87066.	7.6	301.9	0.8	100.0	0.8
GEISUM (EGYPT)		57334.	1.6	18956.	1.7	384.4	1.0	126.9	1.0
BACHAQUERO 13		168443.	4.7	58012.	5.1	2499.1	6.3	861.1	6.7
MEREY		431651.	12.1	144534.	12.6	5047.4	12.6	1695.0	13.2
GULF OF SUEZ		0.	0.0	0.	0.0	41.0	0.1	12.5	0.1
ORIENTE EQUADOR		0.	0.0	0.	0.0	394.7	1.0	123.3	1.0
MENEMOTA VENEZ		269690.	7.5	87957.	7.7	716.2	1.8	233.9	1.8
T J PESADO		0.	0.0	0.	0.0	55.6	0.1	19.3	0.2
PILON		331450.	9.3	113261.	9.9	6796.8	17.0	2327.9	18.2
MAYA		833139.	23.3	268125.	23.4	11110.3	27.8	3582.5	28.0
NAPHTHA C/STOCK		99994.	2.8	26225.	2.3	1876.7	4.7	487.4	3.8
DIST. C/STOCK		27156.	0.8	7973.	0.7	185.3	0.5	54.5	0.4
SLOP		62149.	1.7	17035.	1.5	393.9	1.0	107.5	0.8
SABINE HAD		5196.	0.1	1633.	0.1	5.2	0.0	1.6	0.0
RECYCLE NAPHTHA		30071.	0.8	8056.	0.7	298.2	0.7	79.4	0.6
NO. 2 NAPHTHA		48493.	1.4	12952.	1.1	938.7	2.3	251.2	2.0
MOLEX GASOLINE		0.	0.0	0.	0.0	6.8	0.0	1.8	0.0
SEAL OIL FLUSH		65547.	1.8	20991.	1.8	768.4	1.9	246.8	1.9
#4/#5 HDS GASO		39593.	1.1	9205.	0.8	400.0	1.0	93.4	0.7
	TOTAL	3576451.	100.0	1145388.	100.0	39955.4	100.0	12799.0	100.0
**** YIELDS ****									
STAB OH GAS	ELB	33940.	0.9	6870.	0.6	267.6	0.7	55.9	0.4
STAB OH LIQ		38784.	1.1	8180.	0.7	459.0	1.1	94.8	0.7
STAB LSR		207382.	5.8	51433.	4.5	1993.7	5.0	492.0	3.8
NAPHTHA		190282.	5.3	50723.	4.4	3733.8	9.3	992.2	7.8
RECYCLE NAPHTHA		30071.	0.8	8056.	0.7	298.2	0.7	79.4	0.6
KEROSENE		431563.	12.1	123532.	10.8	3255.3	8.1	926.8	7.2
DIESEL		397775.	11.1	121033.	10.6	4478.7	11.2	1350.6	10.6
GAS OIL		82552.	2.3	26016.	2.3	1479.9	3.7	463.0	3.6
SEAL OIL FLUSH		164301.	4.6	52596.	4.6	1862.1	4.7	598.3	4.7
LVGO		414072.	11.6	132646.	11.6	3860.1	9.7	1239.6	9.7
HVGO		441093.	12.3	145761.	12.7	4891.3	12.2	1618.1	12.6
VACUUM RESID		1193920.	33.4	428878.	37.4	13626.0	34.1	4955.2	38.7
SLOP		4577.	0.1	1240.	0.1	37.7	0.1	10.3	0.1
	LOSS	-53861.	-1.5	-11577.	-1.0	-287.9	-0.7	-77.1	-0.6
	TOTAL	3576451.	100.0	1145388.	100.0	39955.4	100.0	12799.0	100.0

SAL 000005407

**** UNIT 10 - NO. 4 HDS HAS BEEN ON STREAM 31.0 DAYS IN DECEMBER AND 365.00 DAYS TO DATE THIS YEAR ****

STREAM		DECEMBER VOLUME BBLS	DECEMBER VOLUME PCT	DECEMBER WEIGHT MLBS	DECEMBER WEIGHT PCT	YEAR TO DATE VOLUME MBBLS	YEAR TO DATE VOLUME PCT	YEAR TO DATE WEIGHT MMLBS	YEAR TO DATE WEIGHT PCT
**** CHARGES ****									
HPU HYDROGEN	FOE	19342.	1.7	3153.	1.0	160.4	1.4	23.8	0.7
#5 HDS STRIP OH		27524.	2.4	6951.	2.2	318.0	2.7	79.5	2.4
#5 HDS SEP H2	FOE	49015.	4.4	9657.	3.0	578.2	5.0	104.7	3.1
H2 #1 2 & HPU	FOE	14001.	1.2	2181.	0.7	132.8	1.1	20.1	0.6
#3 CTU KEROSENE		148485.	13.2	42598.	13.3	1534.1	13.2	438.6	13.2
#3 CTU DIESEL		397775.	35.3	121033.	37.7	4478.7	38.4	1350.6	40.6
CYC OIL FM STGE		151937.	13.5	49066.	15.3	2102.5	18.0	679.6	20.4
SOUR NAPHTHA		0.	0.0	0.	0.0	158.2	1.4	42.3	1.3
CRACKED NAPHTHA		223719.	19.9	60677.	18.9	1522.5	13.1	408.6	12.3
NO. 6 HDS GASOLI		94041.	8.4	25406.	7.9	654.8	5.6	176.9	5.3
MOLEX GASOLINE		0.	0.0	0.	0.0	10.1	0.1	2.7	0.1
TOTAL		1125839.	100.0	320722.	100.0	11650.1	100.0	3327.5	100.0
**** YIELDS ****									
STR REFLUX #5HDS		2752.	0.2	626.	0.2	60.3	0.5	13.7	0.4
CRACKED GASOLINE		39593.	3.5	9205.	2.9	396.8	3.4	92.6	2.8
H2S RECOVERED	FOE	2949.	0.3	2610.	0.8	51.4	0.4	45.5	1.4
H2 TO #5 HDS	FOE	52946.	4.7	10424.	3.3	644.5	5.5	120.0	3.6
STRP OH GAS	ELB	16858.	1.5	6033.	1.9	198.2	1.7	70.1	2.1
PURGE GS TO GRP	FOE	0.	0.0	0.	0.0	0.5	0.0	0.1	0.0
DES DISTILLATE		840184.	74.6	255911.	79.8	7296.0	62.6	2221.1	66.7
DES KEROSENE		0.	0.0	0.	0.0	1236.8	10.6	355.6	10.7
DES NAPHTHA		160112.	14.2	41905.	13.1	1649.1	14.2	436.2	13.1
LOSS		10445.	0.9	-5993.	-1.9	116.5	1.0	-27.4	-0.8
TOTAL		1125839.	100.0	320722.	100.0	11650.1	100.0	3327.5	100.0

SAL 000005408

**** UNIT 14 - NO. 5 HDS HAS BEEN ON STREAM 31.0 DAYS IN DECEMBER AND 354.08 DAYS TO DATE THIS YEAR ****

STREAM		DECEMBER VOLUME BBLS	PCT	DECEMBER WEIGHT MLBS	PCT	YEAR TO DATE VOLUME MBBLS	PCT	YEAR TO DATE WEIGHT MMLBS	PCT
**** CHARGES ****									
#3 CTU GAS OIL		82552.	14.9	26016.	15.3	1384.7	23.7	434.0	24.4
LT VAC GAS OIL		414072.	75.0	132646.	78.2	3599.3	61.5	1157.4	65.1
HV VAC GAS OIL		0.	0.0	0.	0.0	166.0	2.8	52.9	3.0
H2 FM #4 HDS	FOE	52946.	9.6	10424.	6.1	644.5	11.0	120.0	6.8
STR REFLUX FM #4		2752.	0.5	626.	0.4	60.3	1.0	13.7	0.8
	TOTAL	552322.	100.0	169713.	100.0	5854.8	100.0	1778.0	100.0
**** YIELDS ****									
STP OVHD TO #4		27524.	5.0	6951.	4.1	318.0	5.4	79.5	4.5
HYDR SULFIDE	FOE	3445.	0.6	3050.	1.8	26.9	0.5	23.9	1.3
SWEET SEP HYD	FOE	49015.	8.9	9657.	5.7	578.2	9.9	104.7	5.9
DES GAS OIL		489716.	88.7	154473.	91.0	4931.0	84.2	1547.2	87.0
	LOSS	-17378.	-3.1	-4418.	-2.6	0.7	0.0	22.8	1.3
	TOTAL	552322.	100.0	169713.	100.0	5854.8	100.0	1778.0	100.0

**** UNIT 82 - NO. 3 CRU & HDS HAS BEEN ON STREAM 31.0 DAYS IN DECEMBER AND 314.89 DAYS TO DATE THIS YEAR ****

STREAM		DECEMBER VOLUME BBLS	PCT	DECEMBER WEIGHT MLBS	PCT	YEAR TO DATE VOLUME MBBLS	PCT	YEAR TO DATE WEIGHT MMLBS	PCT
**** CHARGES ****									
NAPHTHA		346801.	100.0	91009.	100.0	3603.9	99.9	947.4	99.9
#2 NHDS NAPHTHA		0.	0.0	0.	0.0	4.6	0.1	1.2	0.1
	TOTAL	346801.	100.0	91009.	100.0	3608.6	100.0	948.6	100.0
**** YIELDS ****									
ABSORBER H2	FOE	31189.	9.0	4857.	5.3	454.0	12.6	89.2	9.4
HYD TO FUEL	FOE	0.	0.0	0.	0.0	0.6	0.0	0.1	0.0
#3 STRIP OH LIQ		27591.	8.0	5192.	5.7	125.3	3.5	23.8	2.5
STRIP/STAB OFF G	ELB	10535.	3.0	2387.	2.6	78.1	2.2	17.0	1.0
#3 DEPROP OH LIQ		10.	0.0	2.	0.0	2.4	0.1	0.5	0.0
REFORMATE		284070.	81.9	79677.	87.5	2888.1	80.0	813.1	85.7
	LOSS	-6594.	-1.9	-1107.	-1.2	60.0	1.7	4.9	0.5
	TOTAL	346801.	100.0	91009.	100.0	3608.6	100.0	948.6	100.0

DECEMBER ENDING VALUES

REFORMATE RONC 99.40

SAL 000005409

**** UNIT 38 - REGULAR COKER HAS BEEN ON STREAM 0.0 DAYS IN DECEMBER AND 77.88 DAYS TO DATE THIS YEAR ****

STREAM	DECEMBER VOLUME BBLS	DECEMBER VOLUME PCT	DECEMBER WEIGHT MLBS	DECEMBER WEIGHT PCT	YEAR TO DATE VOLUME MBBLS	YEAR TO DATE VOLUME PCT	YEAR TO DATE WEIGHT MMLBS	YEAR TO DATE WEIGHT PCT
**** CHARGES ****								
CC BRIGHT STOCK	0.	0.0	0.	0.0	420.2	38.3	148.5	39.3
CC INT.EXT.	0.	0.0	0.	0.0	4.3	0.4	1.4	0.4
CC RESIDUMN	0.	0.0	0.	0.0	559.3	50.9	189.8	50.2
CC FUR EXT	0.	0.0	0.	0.0	2.2	0.2	0.7	0.2
THERMAL TAR	0.	0.0	0.	0.0	12.5	1.1	4.5	1.2
#1 HCGO	0.	0.0	0.	0.0	0.3	0.0	0.1	0.0
ANODE VAC RES	0.	0.0	0.	0.0	40.7	3.7	14.6	3.9
FCC CYLCE OIL	0.	0.0	0.	0.0	0.8	0.1	0.3	0.1
COKER NAPHTHA	0.	0.0	0.	0.0	47.8	4.4	14.9	3.9
SWT FCC CHG STK	0.	0.0	0.	0.0	6.4	0.6	2.0	0.5
PYRO TAR	0.	0.0	0.	0.0	3.8	0.3	1.4	0.4
TOTAL	0.	100.0	0.	100.0	1098.3	100.0	378.2	100.0
**** YIELDS ****								
COKER GAS ELB	0.	0.0	0.	0.0	181.9	16.6	41.1	10.9
REG COKER GASO	0.	0.0	0.	0.0	142.6	13.0	37.1	9.8
LTE COK GAS OIL	0.	0.0	0.	0.0	440.4	40.1	135.4	35.8
HVY COK GAS OIL	0.	0.0	0.	0.0	223.1	20.3	75.9	20.1
ANODE COKE TONS	0.	0.0	0.	0.0	45.5	4.1	91.9	24.3
INTRMEDIATE COKE TONS	0.	0.0	0.	0.0	0.2	0.0	0.5	0.1
LOSS	0.	0.0	0.	0.0	64.7	5.9	-3.6	-1.0
TOTAL	0.	100.0	0.	100.0	1098.3	100.0	378.2	100.0

SAL 000005410

**** UNIT 39 - PREMIUM COKER HAS BEEN ON STREAM 31.0 DAYS IN DECEMBER AND 263.11 DAYS TO DATE THIS YEAR ****

STREAM		DECEMBER VOLUME BBLS	PCT	DECEMBER WEIGHT MLBS	PCT	YEAR TO DATE VOLUME MBBLS	PCT	YEAR TO DATE WEIGHT MMLBS	PCT
**** CHARGES ****									
ANODE VAC RESID		44.	0.0	17.	0.0	0.5	0.0	0.2	0.0
FCC SLURRY		0.	0.0	0.	0.0	2.5	0.1	0.9	0.1
CC RESIDUUM		1434.	0.5	534.	0.5	16.5	0.7	6.0	0.7
CC BRIGHT STOCK		1561.	0.6	608.	0.6	13.9	0.6	5.3	0.6
THERMAL TAR		243873.	89.5	93322.	90.8	1893.5	85.8	721.8	86.7
PYRO TAR		0.	0.0	0.	0.0	133.7	6.1	50.9	6.1
FCC LCO		25470.	9.4	8255.	8.0	145.8	6.6	47.3	5.7
TOTAL		272382.	100.0	102736.	100.0	2206.4	100.0	832.5	100.0
**** YIELDS ****									
COKER GAS	ELB	34808.	12.8	9046.	8.8	333.9	15.1	81.6	9.8
GASOLINE		1332.	0.5	355.	0.3	23.6	1.1	6.3	0.8
LCGO		75269.	27.6	25906.	25.2	628.1	28.5	215.1	25.8
HCGO		99158.	36.4	38043.	37.0	823.1	37.3	314.7	37.8
PREMIUM COKE	TONS	10952.	4.0	21904.	21.3	68.9	3.1	137.8	16.6
NORMAL PREM COKE	TONS	5454.	2.0	10908.	10.6	5.5	0.2	10.9	1.3
INTRMEDIATE COKE	TONS	0.	0.0	0.	0.0	3.4	0.2	6.8	0.8
LS RECARB COKE	TONS	0.	0.0	0.	0.0	17.9	0.8	35.9	4.3
RECARB COKE	TONS	1090.	0.4	2180.	2.1	19.5	0.9	39.1	4.7
LOSS		44319.	16.3	-5606.	-5.5	282.4	12.8	-15.6	-1.9
TOTAL		272382.	100.0	102736.	100.0	2206.4	100.0	832.5	100.0

SAL 000005411

ME05 - MONTH END AND YEAR TO DATE FINAL UNIT YIELD REPORT

**** UNIT 56 - NO. 1 CALCINER HAS BEEN ON STREAM 31.0 DAYS IN DECEMBER AND 97.05 DAYS TO DATE THIS YEAR ****

STREAM		DECEMBER VOLUME BBLS	DECEMBER VOLUME PCT	DECEMBER WEIGHT MLBS	DECEMBER WEIGHT PCT	YEAR TO DATE VOLUME MBBLS	YEAR TO DATE VOLUME PCT	YEAR TO DATE WEIGHT MMLBS	YEAR TO DATE WEIGHT PCT
**** CHARGES ****									
GREEN PREM COKE	TONS	9552.	67.3	19104.	67.3	20.3	52.4	40.6	52.4
GRN N PREM COKE	TONS	4632.	32.7	9264.	32.7	4.6	12.0	9.3	12.0
GRN INT GRAPH CK	TONS	0.	0.0	0.	0.0	3.5	8.9	6.9	8.9
GRN LCH ANODE	TONS	0.	0.0	0.	0.0	7.1	18.4	14.2	18.4
GRN LS RECARB CK	TONS	0.	0.0	0.	0.0	3.7	9.5	7.3	9.5
GRN NORM RECARB	TONS	0.	0.0	0.	0.0	-0.5	-1.2	-0.9	-1.2
	TOTAL	14184	100 0	28368	100 0	38.7	100 0	77.5	100 0
**** YIELDS ****									
CAL PREM COKE	TONS	7651.	53.9	15302.	53.9	16.3	42.0	32.5	42.0
NORM PREM COKE	TONS	3613.	25.5	7226.	25.5	3.6	9.3	7.2	9.3
INT GRAPH COKE	TONS	0.	0.0	0.	0.0	2.8	7.1	5.5	7.1
LCH ANODE COKE	TONS	0.	0.0	0.	0.0	5.6	14.5	11.2	14.5
NORM RECARB CK	TONS	0.	0.0	0.	0.0	-0.4	-0.9	-0.7	-0.9
LS RECARB COKE	TONS	0.	0.0	0.	0.0	2.9	7.6	5.9	7.6
COKE BURNED	TONS	2920.	20.6	5840.	20.6	7.9	20.4	15.8	20.4
	LOSS	0	0.0	0	0.0	0.0	0.0	0.0	0.0
	TOTAL	14184.	100.0	28368.	100.0	38.7	100.0	77.5	100.0

SAL 000005412

**** UNIT 96 - NO. 2 CALCINER HAS BEEN ON STREAM 0.0 DAYS IN DECEMBER AND 176.27 DAYS TO DATE THIS YEAR ****

STREAM		DECEMBER VOLUME BBLS	DECEMBER VOLUME PCT	DECEMBER WEIGHT MLBS	DECEMBER WEIGHT PCT	YEAR TO DATE VOLUME MBBLS	YEAR TO DATE VOLUME PCT	YEAR TO DATE WEIGHT MMLBS	YEAR TO DATE WEIGHT PCT
**** CHARGES ****									
GREEN PREM COKE	TONS	0.	0.0	0.	0.0	30.4	26.2	60.8	26.2
GRN LS RECARB CK	TONS	0.	0.0	0.	0.0	16.6	14.3	33.1	14.3
GRN RECARB COKE	TONS	0.	0.0	0.	0.0	15.0	13.0	30.1	13.0
GRN INT GRAPH CK	TONS	0.	0.0	0.	0.0	6.7	5.8	13.4	5.8
GRN LCH ANODE	TONS	0.	0.0	0.	0.0	47.3	40.8	94.6	40.8
TOTAL		0.	100.0	0.	100.0	116.0	100.0	232.0	100.0
**** YIELDS ****									
CAL PREM COKE	TONS	0.	0.0	0.	0.0	24.5	21.1	49.0	21.1
LS RECARB COKE	TONS	0.	0.0	0.	0.0	13.3	11.5	26.7	11.5
NORM RECARB COKE	TONS	0.	0.0	0.	0.0	12.1	10.4	24.1	10.4
INT GRAPH COKE	TONS	0.	0.0	0.	0.0	5.4	4.7	10.8	4.7
LCH ANODE COKE	TONS	0.	0.0	0.	0.0	38.4	33.1	76.8	33.1
COKE BURNED	TONS	0.	0.0	0.	0.0	22.3	19.2	44.6	19.2
LOSS		0.	0.0	0.	0.0	0.0	0.0	0.0	0.0
TOTAL		0.	100.0	0.	100.0	116.0	100.0	232.0	100.0

**** UNIT 27 - PT ARTHUR CALCIN HAS BEEN ON STREAM 0.0 DAYS IN DECEMBER AND 29.39 DAYS TO DATE THIS YEAR ****

STREAM		DECEMBER VOLUME BBLS	DECEMBER VOLUME PCT	DECEMBER WEIGHT MLBS	DECEMBER WEIGHT PCT	YEAR TO DATE VOLUME MBBLS	YEAR TO DATE VOLUME PCT	YEAR TO DATE WEIGHT MMLBS	YEAR TO DATE WEIGHT PCT
**** CHARGES ****									
GREEN PREM COKE	TONS	0.	0.0	0.	0.0	9.9	23.0	19.8	23.0
GRN RECARB COKE	TONS	0.	0.0	0.	0.0	0.6	1.3	1.2	1.3
GRN LCH ANODE	TONS	0.	0.0	0.	0.0	15.2	35.3	30.4	35.3
GRN HI S FUEL CK	TONS	0.	0.0	0.	0.0	17.4	40.4	34.8	40.4
TOTAL		0.	100.0	0.	100.0	43.1	100.0	86.1	100.0
**** YIELDS ****									
CAL PREM COKE	TONS	0.	0.0	0.	0.0	6.1	14.1	12.2	14.1
NORM RECARB COKE	TONS	0.	0.0	0.	0.0	1.0	2.2	1.9	2.2
LCH ANODE COKE	TONS	0.	0.0	0.	0.0	10.4	24.2	20.9	24.2
HI S FUEL COKE	TONS	0.	0.0	0.	0.0	12.5	29.0	25.0	29.0
COKE BURNED	TONS	0.	0.0	0.	0.0	13.1	30.4	26.2	30.4
LOSS		0.	0.0	0.	0.0	0.0	0.0	0.0	0.0
TOTAL		0.	100.0	0.	100.0	43.1	100.0	86.1	100.0

SAL 000005413

ME05 - MONTH END AND YEAR TO DATE FINAL UNIT YIELD REPORT

**** UNIT 79 - NO. 2 COKER HAS BEEN ON STREAM 31.0 DAYS IN DECEMBER AND 365.00 DAYS TO DATE THIS YEAR ****

STREAM		DECEMBER VOLUME BBLS	PCT	DECEMBER WEIGHT MLBS	PCT	YEAR TO DATE VOLUME MBBLS	PCT	YEAR TO DATE WEIGHT MMLBS	PCT
**** CHARGES ****									
#6 CRACKED GASO		0.	0.0	0.	0.0	515.4	3.2	139.2	2.4
B/D SLOP OIL		2578.	0.2	948.	0.2	51.6	0.3	18.8	0.3
RICH SPONGE OIL		38629.	2.9	11941.	2.5	343.1	2.1	104.9	1.8
SEAL OIL FLUSH		75178.	5.6	24066.	5.0	873.5	5.4	280.6	4.9
CHG FM STGE		1216735.	91.3	448126.	92.4	14272.6	88.9	5201.2	90.5
TOTAL		1333118.	100.0	485081.	100.0	16056.2	100.0	5744.7	100.0
**** YIELDS ****									
COKER GAS	ELB	215341.	16.2	56297.	11.6	2808.6	17.5	690.6	12.0
COKER GASOLINE		226936.	17.0	60004.	12.4	2161.5	13.5	565.5	9.8
LT COKER GAS OIL		345139.	25.9	106684.	22.0	4554.5	28.4	1386.7	24.1
HV COKER GAS OIL		185816.	13.9	63144.	13.0	2844.2	17.7	961.0	16.7
LEAN SPG OIL		28011.	2.1	8658.	1.8	245.9	1.5	75.2	1.3
ANODE COKE	TONS	0.	0.0	0.	0.0	67.0	0.4	134.1	2.3
FUEL GRADE COKE	TONS	67406.	5.1	134812.	27.8	747.7	4.7	1497.7	26.1
LOSS		264469.	19.8	55481.	11.4	2626.8	16.4	434.0	7.6
TOTAL		1333118.	100.0	485081.	100.0	16056.2	100.0	5744.7	100.0

SAL 00005414

**** UNIT 75 - GAS REC PLANT HAS BEEN ON STREAM 31.0 DAYS IN DECEMBER AND 365.00 DAYS TO DATE THIS YEAR ****

STREAM		DECEMBER VOLUME BBLS	DECEMBER VOLUME PCT	DECEMBER WEIGHT MLBS	DECEMBER WEIGHT PCT	YEAR TO DATE VOLUME MBBLS	YEAR TO DATE VOLUME PCT	YEAR TO DATE WEIGHT MMLBS	YEAR TO DATE WEIGHT PCT
**** CHARGES ****									
MISC LT ENDS	ELB	112606.	15.7	28590.	15.4	1004.2	12.6	258.6	13.0
COKER-TCU GASES	ELB	273392.	38.1	71105.	38.3	3592.3	45.2	874.6	43.9
HDS REC H2 PURGE	FOE	0.	0.0	0.	0.0	0.5	0.0	0.1	0.0
CRYO P/B TO GRP		39167.	5.5	7630.	4.1	419.6	5.3	83.6	4.2
THERMAL GASOLINE		35893.	5.0	9148.	4.9	363.2	4.6	92.9	4.7
COKER GASOLINE		228268.	31.8	60359.	32.5	2327.7	29.3	609.0	30.5
#2 CK LN SPG OIL		28011.	3.9	8658.	4.7	245.9	3.1	75.2	3.8
	TOTAL	717337.	100.0	185490.	100.0	7953.5	100.0	1993.9	100.0
**** YIELDS ****									
ABS.TAIL GAS	FOE	180039.	25.1	49543.	26.7	1995.7	25.1	547.7	27.5
PROPANE PROPYLEN		99335.	13.8	17687.	9.5	1071.2	13.5	190.8	9.6
BUTANE BUTYLENE		72502.	10.1	14810.	8.0	885.1	11.1	180.3	9.0
GRP GASOLINE		351120.	48.9	90875.	49.0	3813.2	47.9	975.2	48.9
PP TO FUEL	FOE	0.	0.0	0.	0.0	3.1	0.0	0.9	0.0
SPONGE OIL		38629.	5.4	11941.	6.4	343.1	4.3	104.9	5.3
H2S	FOE	9876.	1.4	8742.	4.7	127.5	1.6	112.9	5.7
	LOSS	-34164.	-4.8	-8107.	-4.4	-285.4	-3.6	-118.7	-6.0
	TOTAL	717337.	100.0	185490.	100.0	7953.5	100.0	1993.9	100.0

SAL 00000415

**** UNIT 74 - NO. 6 HDS HAS BEEN ON STREAM 31.0 DAYS IN DECEMBER AND 346.71 DAYS TO DATE THIS YEAR ****

STREAM		DECEMBER VOLUME BBLS	DECEMBER VOLUME PCT	DECEMBER WEIGHT MLBS	DECEMBER WEIGHT PCT	YEAR TO DATE VOLUME MBBLS	YEAR TO DATE VOLUME PCT	YEAR TO DATE WEIGHT MMLBS	YEAR TO DATE WEIGHT PCT
**** CHARGES ****									
#8 HDS SEP LIQ		0.	0.0	0.	0.0	12.8	0.2	4.6	0.2
#7 & #8 STROVHD		32639.	4.6	10242.	4.8	469.2	6.0	144.8	6.2
SEAL OIL FLUSH		0.	0.0	0.	0.0	6.6	0.1	2.1	0.1
RECYCLE H2	FOE	66223.	9.3	10639.	5.0	602.3	7.7	81.3	3.5
CRACKED DISTILLA		614837.	86.1	193988.	90.3	6726.5	86.0	2085.4	90.0
	TOTAL	713699.	100.0	214869.	100.0	7817.4	100.0	2318.3	100.0
**** YIELDS ****									
SEP H2 TO HPU	FOE	75667.	10.6	11631.	5.4	539.5	6.9	82.9	3.6
HYDROGEN SULFIDE	FOE	1958.	0.3	1733.	0.8	12.6	0.2	11.2	0.5
STRIPPER OH GAS	ELB	10451.	1.5	3124.	1.5	118.1	1.5	38.2	1.6
STRIPPER REFLUX		5483.	0.8	1481.	0.7	134.4	1.7	36.3	1.6
#6 HDS GASOLINE		94041.	13.2	25406.	11.8	1173.3	15.0	317.0	13.7
DES DISTILLATE		579847.	81.2	177643.	82.7	6126.7	78.4	1872.6	80.8
	LOSS	-53748.	-7.5	-6149.	-2.9	-287.2	-3.7	-39.9	-1.7
	TOTAL	713699.	100.0	214869.	100.0	7817.4	100.0	2318.3	100.0

**** UNIT 84 - NO. 8 HDS HAS BEEN ON STREAM 31.0 DAYS IN DECEMBER AND 328.27 DAYS TO DATE THIS YEAR ****

STREAM		DECEMBER VOLUME BBLS	DECEMBER VOLUME PCT	DECEMBER WEIGHT MLBS	DECEMBER WEIGHT PCT	YEAR TO DATE VOLUME MBBLS	YEAR TO DATE VOLUME PCT	YEAR TO DATE WEIGHT MMLBS	YEAR TO DATE WEIGHT PCT
**** CHARGES ****									
PURCHASED SLURRY		9498.	2.6	3497.	3.0	122.8	3.1	45.1	3.6
KOCH SLURRY		29943.	8.3	11249.	9.5	154.9	4.0	57.6	4.6
L CH SLURRY		124138.	34.5	46567.	39.4	1421.3	36.4	528.8	42.4
SOHIO SLURRY		118835.	33.1	44641.	37.8	536.1	13.7	202.1	16.2
~~CHEVRON SLURRY~~		~~0.~~	~~0.0~~	~~0.~~	~~0.0~~	~~82.6~~	~~2.1~~	~~30.0~~	~~2.4~~
CHAMPLIN SLURRY		54.	0.0	19.	0.0	218.6	5.6	79.6	6.4
DESULF. SLURRY		0.	0.0	0.	0.0	22.0	0.6	7.6	0.6
PYRO. TAR		0.	0.0	0.	0.0	163.6	4.2	62.1	5.0
THERMAL TAR		0.	0.0	0.	0.0	0.5	0.0	0.2	0.0
GAS OIL FR T-398		0.	0.0	0.	0.0	148.5	3.8	49.4	4.0
LT CYC OIL-T023		0.	0.0	0.	0.0	57.8	1.5	18.5	1.5
RECYCLE H2	FOE	76933.	21.4	12187.	10.3	817.6	20.9	110.0	8.8
SEAL OIL FLUSH		0.	0.0	0.	0.0	11.0	0.3	3.5	0.3
REG COK GAS OIL		0.	0.0	0.	0.0	135.2	3.5	46.0	3.7
PREM COK GAS OIL		0.	0.0	0.	0.0	13.3	0.3	5.1	0.4
	TOTAL	359401.	100.0	118159.	100.0	3905.7	100.0	1245.8	100.0

SAL 000005416

**** UNIT 84 - NO. 8 HDS HAS BEEN ON STREAM 31.0 DAYS IN DECEMBER AND 328.27 DAYS TO DATE THIS YEAR ****

STREAM	DECEMBER VOLUME BBLS	DECEMBER VOLUME PCT	DECEMBER WEIGHT MLBS	DECEMBER WEIGHT PCT	YEAR TO DATE VOLUME MBBLS	YEAR TO DATE VOLUME PCT	YEAR TO DATE WEIGHT MMLBS	YEAR TO DATE WEIGHT PCT
**** YIELDS ****								
NO. 8 SEP LIQUID	0.	0.0	0.	0.0	12.8	0.3	4.6	0.4
NO. 8 SEP GAS FOE	67191.	18.7	11183.	9.5	729.9	18.7	107.2	8.6
NO. 8 STRIP OVHD	10900.	3.0	3368.	2.9	113.1	2.9	34.8	2.8
NO.8 DES. SLURRY	286841.	79.8	105204.	89.0	2827.8	72.4	1019.7	81.8
NO.8 DES. GAS OI	0.	0.0	0.	0.0	288.0	7.4	94.1	7.6
HYDROGEN SULFIDE FOE	2305.	0.6	2040.	1.7	11.1	0.3	9.8	0.8
LOSS	-7836.	-2.2	-3636.	-3.1	-77.0	-2.0	-24.3	-2.0
TOTAL	359401.	100.0	118159.	100.0	3905.7	100.0	1245.8	100.0

**** UNIT 90 - NO. 7 HDS HAS BEEN ON STREAM 19.2 DAYS IN DECEMBER AND 324.52 DAYS TO DATE THIS YEAR ****

STREAM	DECEMBER VOLUME BBLS	DECEMBER VOLUME PCT	DECEMBER WEIGHT MLBS	DECEMBER WEIGHT PCT	YEAR TO DATE VOLUME MBBLS	YEAR TO DATE VOLUME PCT	YEAR TO DATE WEIGHT MMLBS	YEAR TO DATE WEIGHT PCT
**** CHARGES ****								
SEAL OIL FLUSH	23576.	3.5	7539.	3.6	202.6	2.1	65.2	2.2
H2 FM H2 SYSTEM FOE	112168.	16.4	18426.	8.9	1666.5	17.0	223.8	7.7
#6 HDS STP REFLX	5483.	0.8	1481.	0.7	134.4	1.4	36.3	1.2
LVGO	0.	0.0	0.	0.0	95.1	1.0	30.9	1.1
HVGO	270416.	39.6	89424.	43.2	3949.6	40.4	1310.0	45.0
REG HCGO	82653.	12.1	28103.	13.6	1499.3	15.3	506.7	17.4
#3 CTO GAS OIL	0.	0.0	0.	0.0	16.6	0.2	5.3	0.2
CHG FM STORAGE	188813.	27.6	62207.	30.0	2219.0	22.7	732.7	25.2
TOTAL	683109.	100.0	207179.	100.0	9783.2	100.0	2910.9	100.0
**** YIELDS ****								
SEP GAS TO HPU FOE	74709.	10.9	13048.	6.3	1137.6	11.6	172.2	5.9
STRIP OVHD GAS	21740.	3.2	6873.	3.3	356.1	3.6	110.0	3.8
DES GAS OIL	563950.	82.6	182187.	87.9	8020.8	82.0	2594.4	89.1
HYDROGEN SULPHID FOE	3204.	0.5	2836.	1.4	15.9	0.2	14.0	0.5
LOSS	19506.	2.9	2235.	1.1	252.8	2.6	20.3	0.7
TOTAL	683109.	100.0	207179.	100.0	9783.2	100.0	2910.9	100.0

SAL 000005417

**** UNIT 89 - HYDROGEN SYSTEM HAS BEEN ON STREAM 31.0 DAYS IN DECEMBER AND 364.54 DAYS TO DATE THIS YEAR ****

STREAM		DECEMBER VOLUME BBLS	PCT	DECEMBER WEIGHT MLBS	PCT	YEAR TO DATE VOLUME MBBLS	PCT	YEAR TO DATE WEIGHT MMLBS	PCT
**** CHARGES ****									
TOTAL VISTA IMPO	FOE	51300.	14.0	8175.	13.9	592.0	13.9	97.5	14.4
TOTAL JUP IMPORT	FOE	24741.	6.8	2588.	4.4	364.5	8.5	38.6	5.7
HDS SEP H2	FOE	217566.	59.5	35862.	61.0	2407.0	56.3	362.2	53.5
NO. 3 CRU HYDROG	FOE	31189.	8.5	4857.	8.3	454.0	10.6	89.2	13.2
H2 FRM #1 & #2 H	FOE	40798.	11.2	7326.	12.5	454.6	10.6	89.6	13.2
	TOTAL	365594.	100.0	58808.	100.0	4272.1	100.0	677.1	100.0
**** YIELDS ****									
RECYCLE H2	FOE	255323.	69.8	41252.	70.1	3086.5	72.2	415.2	61.3
LP H2 TO EFS HDS	FOE	14001.	3.8	2181.	3.7	132.0	3.1	19.9	2.9
HP H2 TO #4 HDS	FOE	19342.	5.3	3153.	5.4	197.1	4.6	29.2	4.3
HP H2 TO #2&#1 H	FOE	10602.	2.9	1259.	2.1	59.1	1.4	6.6	1.0
REC PURGE TO FUE	FOE	655.	0.2	111.	0.2	19.8	0.5	3.0	0.4
H2 TO CITIES	FOE	21379.	5.8	4206.	7.2	567.1	13.3	108.2	16.0
H2 TO VISTA	FOE	0.	0.0	0.	0.0	0.0	0.0	0.0	0.0
JUPITER H2-FUEL	FOE	7519.	2.1	786.	1.3	36.8	0.9	3.8	0.6
VISTA H2-FUEL	FOE	14502.	4.0	2302.	3.9	104.8	2.5	17.5	2.6
PSA TG TO FUEL	FOE-	18775.	5.1	3871.	6.6	225.4	5.3	48.8	7.2
	LOSS	3496.	1.0	-313.	-0.5	-156.7	-3.7	24.8	3.7
	TOTAL	365594.	100.0	58808.	100.0	4272.1	100.0	677.1	100.0

SAL 00005418

**** UNIT 85 - FCC FEED PREP HAS BEEN ON STREAM 31.0 DAYS IN DECEMBER AND 331.83 DAYS TO DATE THIS YEAR ****

STREAM		DECEMBER VOLUME BBLS	PCT	DECEMBER WEIGHT MLBS	PCT	YEAR TO DATE VOLUME MBBLS	PCT	YEAR TO DATE WEIGHT MMLBS	PCT
**** CHARGES ****									
DESUL. GAS OIL		1032949.	100.0	330096.	100.0	12309.3	100.0	3937.7	100.0
	TOTAL	1032949.	100.0	330096.	100.0	12309.3	100.0	3937.7	100.0
**** YIELDS ****									
DIESEL		155446.	15.0	47967.	14.5	1561.2	12.7	482.1	12.2
DES GAS OIL		837099.	81.0	268410.	81.3	10609.9	86.2	3414.3	86.7
SLOP		8034.	0.8	2276.	0.7	83.3	0.7	23.6	0.6
	LOSS	32370.	3.1	11443.	3.5	54.9	0.4	17.7	0.5
	TOTAL	1032949.	100.0	330096.	100.0	12309.3	100.0	3937.7	100.0

**** UNIT 86 - CDR UNIT HAS BEEN ON STREAM 7.0 DAYS IN DECEMBER AND 164.00 DAYS TO DATE THIS YEAR ****

STREAM		DECEMBER VOLUME BBLS	PCT	DECEMBER WEIGHT MLBS	PCT	YEAR TO DATE VOLUME MBBLS	PCT	YEAR TO DATE WEIGHT MMLBS	PCT
**** CHARGES ****									
CDR RAFFINATE	GALS	442065.	91.7	3020.	92.5	3628.7	91.4	24.8	92.2
DECENE	GALS	38972.	8.1	241.	7.4	327.3	8.2	2.0	7.5
DEAC	GALS	0.	0.0	0.	0.0	0.0	0.0	0.0	0.0
DIBAC	GALS	430.	0.1	3.	0.1	6.5	0.2	0.0	0.2
ETHER	GALS	54.	0.0	0.	0.0	0.6	0.0	0.0	0.0
TITANIUM CL3	LBS	647.	0.1	1.	0.0	7.0	0.2	0.0	0.0
VAN LUBE SL	GALS	96.	0.0	1.	0.0	0.8	0.0	0.0	0.0
	TOTAL	482264.	100.0	3266.	100.0	3971.0	100.0	26.9	100.0
**** YIELDS ****									
DRAG REDUCR 102R	GALS	0.	0.0	0.	0.0	0.0	0.0	0.0	0.0
DRAG REDUCR 102M	GALS	460550.	95.5	3132.	95.9	3771.6	95.0	25.6	95.4
DRAG REDUCR 102S	GALS	19818.	4.1	135.	4.1	79.2	2.0	0.5	2.0
DRAG REDUCER T/R	GALS	0.	0.0	0.	0.0	103.5	2.6	0.7	2.6
CDR OFF SPEC	GALS	0.	0.0	0.	0.0	0.0	0.0	0.0	0.0
	LOSS	1896.	0.4	0.	0.0	16.6	0.4	0.0	0.0
	TOTAL	482264.	100.0	3266.	100.0	3971.0	100.0	26.9	100.0

SAL 000005419

**** UNIT 02 - NO. 2 CRUDE UNIT HAS BEEN ON STREAM 31.0 DAYS IN DECEMBER AND 363.46 DAYS TO DATE THIS YEAR ****

STREAM	DECEMBER VOLUME BBLS	DECEMBER VOLUME PCT	DECEMBER WEIGHT MLBS	DECEMBER WEIGHT PCT	YEAR TO DATE VOLUME MBBLS	YEAR TO DATE VOLUME PCT	YEAR TO DATE WEIGHT MMLBS	YEAR TO DATE WEIGHT PCT
**** CHARGES ****								
CONOCO PIPELINE	540378.	38.1	152574.	37.2	6966.8	46.0	1988.7	45.2
TEXACO PIPELINE	290771.	20.5	81661.	19.9	5469.5	36.2	1562.6	35.6
ALASKAN N/SLPE	103.	0.0	-11.	0.0	46.2	0.3	14.2	0.3
CABINDA-SWEET	0.	0.0	0.	0.0	6.3	0.0	1.9	0.0
CONDENSATE	72096.	5.1	19307.	4.7	72.1	0.5	19.3	0.4
DOMESTIC BARGE	470902.	33.2	133655.	32.6	2184.5	14.4	624.6	14.2
SLOP	44468.	3.1	23003.	5.6	383.5	2.5	183.7	4.2
TOTAL	1418718.	100.0	410188.	100.0	15128.8	100.0	4395.0	100.0
**** YIELDS ****								
CRUDE/DEBUT GAS ELB	51069.	3.6	12819.	3.1	630.3	4.2	132.9	3.0
LSR GASOLINE	57288.	4.0	14391.	3.5	1050.6	6.9	262.8	6.0
NAPHTHA	205265.	14.5	54700.	13.3	2111.7	14.0	564.3	12.8
KEROSENE	231202.	16.3	64870.	15.8	2382.6	15.7	672.6	15.3
HEAVY HOD	38994.	2.7	11142.	2.7	446.7	3.0	128.5	2.9
DIESEL	379079.	26.7	111560.	27.2	3514.2	23.2	1040.1	23.7
GAS OIL	93454.	6.6	28567.	7.0	500.1	3.3	151.7	3.5
TOPPED CRUDE	311672.	22.0	99745.	24.3	3990.0	26.4	1282.5	29.2
SLOP	0.	0.0	0.	0.0	21.0	0.1	6.0	0.1
LOSS	50695.	3.6	12394.	3.0	481.6	3.2	153.6	3.5
TOTAL	1418718.	100.0	410188.	100.0	15128.8	100.0	4395.0	100.0

SAL 00005420

**** UNIT 35 - FCC UNIT HAS BEEN ON STREAM 31.0 DAYS IN DECEMBER AND 360.49 DAYS TO DATE THIS YEAR ****

STREAM		DECEMBER VOLUME BBLS	PCT	DECEMBER WEIGHT MLBS	PCT	YEAR TO DATE VOLUME MBBLS	PCT	YEAR TO DATE WEIGHT MMLBS	PCT
**** CHARGES ****									
CHARGE FROM STGE		457772.	39.6	146306.	39.8	5799.1	40.6	1858.6	40.9
H. CYCLE OIL		0.	0.0	0.	0.0	9.7	0.1	3.1	0.1
LT SLOP FM STGE		5358.	0.5	1491.	0.4	72.9	0.5	20.3	0.4
#2 CTU GAS OIL		93454.	8.1	28567.	7.8	453.6	3.2	137.6	3.0
DES GAS OIL		576333.	49.9	185915.	50.5	7721.7	54.1	2480.8	54.6
MISC. LT. ENDS	ELB	22549.	2.0	5516.	1.5	220.6	1.5	46.8	1.0
	TOTAL	1155466.	100.0	367795.	100.0	14277.6	100.0	4547.2	100.0
**** YIELDS ****									
H2S	FOE	456.	0.0	403.	0.1	4.1	0.0	3.6	0.1
ABS TAIL GAS	FOE	54258.	4.7	17603.	4.8	697.2	4.9	229.0	5.0
PROPANE-PROPLENE		81267.	7.0	14797.	4.0	1008.3	7.1	184.0	4.0
P-P TO FUEL	FOE	0.	0.0	0.	0.0	16.1	0.1	4.8	0.1
BUTANE-BUTYLENE		144133.	12.5	29200.	7.9	1680.4	11.8	342.2	7.5
FCC GASOLINE		604285.	52.3	155018.	42.1	7390.5	51.8	1908.6	42.0
LT CYCLE OIL		322950.	27.9	104479.	28.4	3906.4	27.4	1263.3	27.8
H CYCLE OIL RECY		0.	0.0	0.	0.0	9.7	0.1	3.1	0.1
SLURRY		84181.	7.3	31447.	8.6	1176.9	8.2	437.7	9.6
SLOP		0.	0.0	0.	0.0	35.2	0.2	9.7	0.2
COKE BURNED	TONS	7548.	0.7	15096.	4.1	93.9	0.7	187.8	4.1
	LOSS	-143612.	-12.4	-248.	-0.1	-1741.0	-12.2	-26.5	-0.6
	TOTAL	1155466.	100.0	367795.	100.0	14277.6	100.0	4547.2	100.0

SAL 000005421

**** UNIT 83 - CRYO GAS PLANT HAS BEEN ON STREAM 31.0 DAYS IN DECEMBER AND 363.21 DAYS TO DATE THIS YEAR ****

STREAM		DECEMBER VOLUME BBLS	DECEMBER VOLUME PCT	DECEMBER WEIGHT MLBS	DECEMBER WEIGHT PCT	YEAR TO DATE VOLUME MBBLS	YEAR TO DATE VOLUME PCT	YEAR TO DATE WEIGHT MMLBS	YEAR TO DATE WEIGHT PCT
**** CHARGES ****									
CRYO FEED GAS		216318.	100.0	59969.	100.0	2469.6	100.0	700.9	100.0
	TOTAL	216318.	100.0	59969.	100.0	2469.6	100.0	700.9	100.0
**** YIELDS ****									
CRYO GAS TO FUEL FOE		177056.	81.8	48473.	80.8	2064.1	83.6	586.6	83.7
CRYO GAS TO FLAR FOE		0.	0.0	0.	0.0	0.0	0.0	0.0	0.0
CRYO P/B TO GRP		39167.	18.1	7630.	12.7	419.6	17.0	83.6	11.9
	LOSS	95.	0.0	3866.	6.4	-14.2	-0.6	30.7	4.4
	TOTAL	216318.	100.0	59969.	100.0	2469.6	100.0	700.9	100.0

**** UNIT 41 - CAT POLY UNIT HAS BEEN ON STREAM 31.0 DAYS IN DECEMBER AND 363.87 DAYS TO DATE THIS YEAR ****

STREAM		DECEMBER VOLUME BBLS	DECEMBER VOLUME PCT	DECEMBER WEIGHT MLBS	DECEMBER WEIGHT PCT	YEAR TO DATE VOLUME MBBLS	YEAR TO DATE VOLUME PCT	YEAR TO DATE WEIGHT MMLBS	YEAR TO DATE WEIGHT PCT
**** CHARGES ****									
PROP-PROPYLENE		160858.	100.0	28892.	100.0	1899.7	100.0	342.0	100.0
	TOTAL	160858.	100.0	28892.	100.0	1899.7	100.0	342.0	100.0
**** YIELDS ****									
PROPANE		77833.	48.4	13830.	47.9	996.1	52.4	175.7	51.4
PP TO FUEL	FOE	0.	0.0	0.	0.0	1.0	0.1	0.3	0.1
BUTANE		16512.	10.3	2935.	10.2	188.3	9.9	33.4	9.8
POLY GASO		44523.	27.7	11432.	39.6	546.0	28.7	140.4	41.1
SLOP		0.	0.0	0.	0.0	2.8	0.1	0.7	0.2
	LOSS	21990.	13.7	694.	2.4	165.5	8.7	-8.6	-2.5
	TOTAL	160858.	100.0	28892.	100.0	1899.7	100.0	342.0	100.0

SAL 000005422

**** UNIT 68 - NP SPLITTER HAS BEEN ON STREAM 31.0 DAYS IN DECEMBER AND 320.86 DAYS TO DATE THIS YEAR ****

STREAM	DECEMBER VOLUME BBLS	DECEMBER VOLUME PCT	DECEMBER WEIGHT MLBS	DECEMBER WEIGHT PCT	YEAR TO DATE VOLUME MBBLS	YEAR TO DATE VOLUME PCT	YEAR TO DATE WEIGHT MMLBS	YEAR TO DATE WEIGHT PCT
**** CHARGES ****								
NORMAL PARAFFINS	114483.	100.0	30193.	100.0	1056.6	100.0	279.0	100.0
TOTAL	114483.	100.0	30193.	100.0	1056.6	100.0	279.0	100.0
**** YIELDS ****								
LT PARAFFINS	71642.	62.6	18844.	62.4	643.5	60.9	171.1	61.3
HVY PARAFFINS	47097.	41.1	12569.	41.6	409.5	38.8	109.4	39.2
LOSS	-4256.	-3.7	-1221.	-4.0	3.6	0.3	-1.5	-0.5
TOTAL	114483.	100.0	30193.	100.0	1056.6	100.0	279.0	100.0

**** UNIT 50 - LIGHT GASO SPLIT HAS BEEN ON STREAM 31.0 DAYS IN DECEMBER AND 365.00 DAYS TO DATE THIS YEAR ****

STREAM	DECEMBER VOLUME BBLS	DECEMBER VOLUME PCT	DECEMBER WEIGHT MLBS	DECEMBER WEIGHT PCT	YEAR TO DATE VOLUME MBBLS	YEAR TO DATE VOLUME PCT	YEAR TO DATE WEIGHT MMLBS	YEAR TO DATE WEIGHT PCT
**** CHARGES ****								
GRP GASOLINE	351120.	57.2	90875.	58.2	3813.2	56.7	975.2	57.5
#2783 CTU LSR	262836.	42.8	65373.	41.8	2906.8	43.3	719.6	42.5
TOTAL	613956.	100.0	156248.	100.0	6720.0	100.0	1694.9	100.0
**** YIELDS ****								
PRIMARY TWR GAS ELB	4142.	0.7	904.	0.6	45.4	0.7	9.7	0.6
PRI TWR GAS FUEL FOE	509.	0.1	143.	0.1	4.6	0.1	1.3	0.1
LSR GASOLINE	56236.	9.2	13115.	8.4	804.6	12.0	188.8	11.1
LIGHT CRACKED GA	95538.	15.6	25657.	16.4	1315.3	19.6	337.2	19.9
NAPHTHA	186237.	30.3	47271.	30.3	1928.4	28.7	486.9	28.7
CRACKED NAPHTHA	225753.	36.8	61235.	39.2	2456.1	36.5	658.9	38.9
SLOP	0.	0.0	0.	0.0	0.2	0.0	0.0	0.0
LOSS	45541.	7.4	7924.	5.1	165.4	2.5	12.1	0.7
TOTAL	613956.	100.0	156248.	100.0	6720.0	100.0	1694.9	100.0

SAL 000005423

**** UNIT 57 - NO. 1 HDS HAS BEEN ON STREAM 31.0 DAYS IN DECEMBER AND 264.94 DAYS TO DATE THIS YEAR ****

STREAM		DECEMBER VOLUME BBLS	PCT	DECEMBER WEIGHT MLBS	PCT	YEAR TO DATE VOLUME MBBLS	PCT	YEAR TO DATE WEIGHT MMLBS	PCT
**** CHARGES ****									
H2 FRM HPU	FOE	10602.	5.8	1259.	2.5	57.3	3.5	6.4	1.5
RECYCLE PURGE H2	FOE	0.	0.0	0.	0.0	36.7	2.2	5.4	1.2
CRACKED NAPHTHA		0.	0.0	0.	0.0	1037.9	63.5	278.3	64.1
#3 CTU KEROSENE		173760.	94.2	49734.	97.5	503.3	30.8	144.1	33.2
	TOTAL	184362.	100.0	50993.	100.0	1635.2	100.0	434.1	100.0
**** YIELDS ****									
H2 #4 & HPU	FOE	5076.	2.8	502.	1.0	54.3	3.3	5.9	1.4
SOH GAS	ELB	676.	0.4	189.	0.4	12.2	0.7	3.6	0.8
SOUR NAPHTHA		0.	0.0	0.	0.0	1059.5	64.8	279.9	64.5
DES. KEROSENE		168547.	91.4	48359.	94.8	458.4	28.0	131.5	30.3
GAS TO FLARE	FOE	0.	0.0	0.	0.0	0.0	0.0	0.0	0.0
SLOP		0.	0.0	0.	0.0	24.3	1.5	6.9	1.6
	LOSS	10063.	5.5	1943.	3.8	26.4	1.6	6.3	1.5
	TOTAL	184362.	100.0	50993.	100.0	1635.2	100.0	434.1	100.0

**** UNIT 62 - NO. 2 CRU & HDS HAS BEEN ON STREAM 31.0 DAYS IN DECEMBER AND 330.01 DAYS TO DATE THIS YEAR ****

STREAM		DECEMBER VOLUME BBLS	PCT	DECEMBER WEIGHT MLBS	PCT	YEAR TO DATE VOLUME MBBLS	PCT	YEAR TO DATE WEIGHT MMLBS	PCT
**** CHARGES ****									
NAPHTHA		347393.	91.0	91407.	90.8	4397.3	92.0	1157.0	91.8
MOLEX GASOLINE		34408.	9.0	9225.	9.2	378.3	7.9	102.5	8.1
HPU HYDROGEN	FOE	0.	0.0	0.	0.0	1.9	0.0	0.2	0.0
	TOTAL	381801.	100.0	100632.	100.0	4777.4	100.0	1259.7	100.0
**** YIELDS ****									
SP H2 #1 #4 HPU	FOE	35722.	9.4	6824.	6.8	401.0	8.4	83.8	6.7
DESUL. NAPHTHA		0.	0.0	0.	0.0	63.7	1.3	17.0	1.4
HYDROGEN TO FUEL	FOE	18190.	4.8	3379.	3.4	30.6	0.6	5.7	0.5
STAB GAS	ELB	7484.	2.0	1779.	1.8	256.2	5.4	56.3	4.5
GASES TO FLARE	FOE	109.	0.0	31.	0.0	0.1	0.0	0.0	0.0
STAB LIQ		17715.	4.6	3156.	3.1	134.0	2.8	25.0	2.0
REFORMATE		299760.	78.5	81606.	81.1	3761.3	78.7	1031.2	81.9
	LOSS	2821.	0.7	3858.	3.8	130.5	2.7	40.5	3.2
	TOTAL	381801.	100.0	100632.	100.0	4777.4	100.0	1259.7	100.0

DECEMBER ENDING VALUES

REFORMATE RONC 96.23

SAL 000005424

**** UNIT 15 - THERMAL CRACKER HAS BEEN ON STREAM 31.0 DAYS IN DECEMBER AND 294.10 DAYS TO DATE THIS YEAR ****

STREAM		DECEMBER VOLUME BBLS	PCT	DECEMBER WEIGHT MLBS	PCT	YEAR TO DATE VOLUME MBBLS	PCT	YEAR TO DATE WEIGHT MMLBS	PCT
**** CHARGES ****									
GAS OIL FM STG		266062.	96.3	97571.	96.7	2669.6	98.6	964.2	98.8
FCC CYCLE OIL FM		10332.	3.7	3336.	3.3	37.4	1.4	12.2	1.2
	TOTAL	276394.	100.0	100907.	100.0	2707.0	100.0	976.4	100.0
**** YIELDS ****									
FRACT GAS-GRP	ELB	23243.	8.4	5763.	5.7	267.9	9.9	61.3	6.3
VENT GAS TO FLAR	FOE	423.	0.2	120.	0.1	5.1	0.2	1.4	0.1
THERMAL GASOLINE		35893.	13.0	9148.	9.1	363.2	13.4	92.9	9.5
CYCLE OIL		4806.	1.7	1412.	1.4	122.0	4.5	38.0	3.9
THERMAL TAR		228600.	82.7	87697.	86.9	2017.4	74.5	771.2	79.0
SLOP		0.	0.0	0.	0.0	1.1	0.0	0.3	0.0
	LOSS	-16571.	-6.0	-3233.	-3.2	-69.5	-2.6	11.2	1.1
	TOTAL	276394.	100.0	100907.	100.0	2707.0	100.0	976.4	100.0

**** UNIT 42 - CASINGHEAD UNIT HAS BEEN ON STREAM 31.0 DAYS IN DECEMBER AND 363.33 DAYS TO DATE THIS YEAR ****

STREAM		DECEMBER VOLUME BBLS	PCT	DECEMBER WEIGHT MLBS	PCT	YEAR TO DATE VOLUME MBBLS	PCT	YEAR TO DATE WEIGHT MMLBS	PCT
**** CHARGES ****									
FIELD PBC		40436.	13.1	6725.	11.1	438.1	12.5	78.1	11.5
CONDENSATE		0.	0.0	0.	0.0	10.0	0.3	1.4	0.2
REF PBC LIQ		106841.	34.6	15608.	25.7	799.6	22.8	131.0	19.0
MISC LT ENDS	ELB	0.	0.0	0.	0.0	413.0	11.8	78.5	11.4
CAT POLY/ALKY C3		89810.	29.0	27676.	45.5	1128.6	32.2	285.4	41.3
POLY & ALKY C4		72068.	23.3	10813.	17.8	712.9	20.3	115.7	16.8
#3 REF PP		7.	0.0	1.	0.0	2.3	0.1	0.3	0.0
	TOTAL	309162.	100.0	60823.	100.0	3504.6	100.0	690.4	100.0
**** YIELDS ****									
PBC VAPORS	ELB	1428.	0.5	411.	0.7	20.5	0.6	5.9	0.9
DEETH TAIL GAS	FOE	8983.	2.9	2604.	4.3	65.9	1.9	19.2	2.8
PROPANE		148026.	47.9	26063.	42.9	1750.0	49.9	309.7	44.9
PROPANE TO FUEL	FOE	4300.	1.4	1265.	2.1	22.7	0.6	6.7	1.0
BUTANE		59223.	19.2	12155.	20.0	714.6	20.4	146.6	21.2
ISOBUTANE		21844.	7.1	4296.	7.1	283.0	8.1	55.8	8.1
CH GASOLINE		63263.	20.5	15326.	25.2	739.9	21.1	177.7	25.7
	LOSS	2095.	0.7	-1297.	-2.1	-91.9	-2.6	-31.1	-4.5
	TOTAL	309162.	100.0	60823.	100.0	3504.6	100.0	690.4	100.0

SAL 000005425

**** UNIT 43 - ALKYLATION UNIT HAS BEEN ON STREAM 30.3 DAYS IN DECEMBER AND 360.42 DAYS TO DATE THIS YEAR ****

STREAM		DECEMBER VOLUME BBLS	PCT	DECEMBER WEIGHT MLBS	PCT	YEAR TO DATE VOLUME MBBLS	PCT	YEAR TO DATE WEIGHT MMLBS	PCT
**** CHARGES ****									
B-B FM STORAGE		218739.	56.4	44436.	57.3	2553.8	58.7	520.0	59.6
IC4 FM STORAGE		147788.	38.1	29060.	37.5	1596.0	36.7	314.5	36.0
FCC P-P		19744.	5.1	3592.	4.6	177.5	4.1	32.4	3.7
PBC VAPORS	ELB	1428.	0.4	411.	0.5	20.5	0.5	5.9	0.7
TOTAL		387699.	100.0	77499.	100.0	4347.9	100.0	872.8	100.0
**** YIELDS ****									
PROPANE		11977.	3.1	2117.	2.7	135.4	3.1	23.9	2.7
BUTANE		54832.	14.1	11332.	14.6	642.9	14.8	131.6	15.1
ISOBUTANE		64124.	16.5	12616.	16.3	699.2	16.1	137.7	15.8
ALKYLATE		213968.	55.2	52503.	67.7	2406.4	55.3	589.5	67.5
WET BL DWN-FUEL	FOE	0.	0.0	0.	0.0	10.7	0.2	3.1	0.4
WET BL DWN-FLARE	FOE	0.	0.0	0.	0.0	0.1	0.0	0.0	0.0
LOSS		42798.	11.0	-1069.	-1.4	453.2	10.4	-13.1	-1.5
TOTAL		387699.	100.0	77499.	100.0	4347.9	100.0	872.8	100.0

**** UNIT 23 - ACID PLANT HAS BEEN ON STREAM 31.0 DAYS IN DECEMBER AND 313.97 DAYS TO DATE THIS YEAR ****

STREAM		DECEMBER VOLUME BBLS	PCT	DECEMBER WEIGHT MLBS	PCT	YEAR TO DATE VOLUME MBBLS	PCT	YEAR TO DATE WEIGHT MMLBS	PCT
**** CHARGES ****									
AMINE ACID GAS	FOE	1719.	16.8	1521.	8.7	3.9	4.7	3.4	2.3
SWS GAS	FOE	985.	9.7	872.	5.0	8.5	10.4	7.5	5.0
SPENT ACID	100%	5259.	51.5	10518.	60.5	52.5	64.4	105.0	70.4
CALC. O2 & H2O	TONS	2241.	22.0	4482.	25.8	16.6	20.4	33.2	22.3
TOTAL		10204.	100.0	17393.	100.0	81.5	100.0	149.1	100.0
**** YIELDS ****									
98% SUL ACID	100%	8816.	86.4	17632.	101.4	67.7	83.1	137.1	91.9
LOSS		1388.	13.6	-239.	-1.4	13.8	16.9	12.0	8.1
TOTAL		10204.	100.0	17393.	100.0	81.5	100.0	149.1	100.0

SAL 000005426

**** UNIT 91 - SULFUR PLANT HAS BEEN ON STREAM 31.0 DAYS IN DECEMBER AND 365.00 DAYS TO DATE THIS YEAR ****

STREAM		DECEMBER VOLUME BBLS	DECEMBER VOLUME PCT	DECEMBER WEIGHT MLBS	DECEMBER WEIGHT PCT	YEAR TO DATE VOLUME MBBLS	YEAR TO DATE VOLUME PCT	YEAR TO DATE WEIGHT MMLBS	YEAR TO DATE WEIGHT PCT
**** CHARGES ****									
SWS ACID GAS	FOE	0.	0.0	0.	0.0	0.9	0.5	0.8	0.5
AMINE ACID GAS	FOE	13472.	100.0	11925.	100.0	180.5	99.5	159.8	99.5
	TOTAL	13472.	100.0	11925.	100.0	181.5	100.0	160.6	100.0
**** YIELDS ****									
FUEL MAKE	FOE	473.	3.5	98.	0.8	5.1	2.8	1.1	0.7
SULFUR-TONS	TONS	7522.	55.8	15045.	126.2	78.4	43.2	156.7	97.6
CALC. PROC LOSS	TONS	351.	2.6	701.	5.9	4.8	2.6	9.6	6.0
	LOSS	5126.	38.0	-3919.	-32.9	93.2	51.4	-6.7	-4.2
	TOTAL	13472.	100.0	11925.	100.0	181.5	100.0	160.6	100.0

**** UNIT 22 - NASH PLANT HAS BEEN ON STREAM 31.0 DAYS IN DECEMBER AND 270.50 DAYS TO DATE THIS YEAR ****

STREAM		DECEMBER VOLUME BBLS	DECEMBER VOLUME PCT	DECEMBER WEIGHT MLBS	DECEMBER WEIGHT PCT	YEAR TO DATE VOLUME MBBLS	YEAR TO DATE VOLUME PCT	YEAR TO DATE WEIGHT MMLBS	YEAR TO DATE WEIGHT PCT
**** CHARGES ****									
AMINE ACID GAS	FOE	4476.	100.0	3934.	100.0	58.3	100.0	51.2	100.0
	TOTAL	4476.	100.0	3934.	100.0	58.3	100.0	51.2	100.0
**** YIELDS ****									
SULFUR AS H2S	TONS	1324.	29.6	2648.	67.3	23.2	39.8	46.4	90.6
PROCESSING LOSS	TONS	118.	2.6	236.	6.0	1.5	2.6	3.1	6.0
	LOSS	3034.	67.8	1050.	26.7	33.5	57.5	1.8	3.4
	TOTAL	4476.	100.0	3934.	100.0	58.3	100.0	51.2	100.0

SAL 000005427

**** UNIT 05 - REG BLENDING HAS BEEN ON STREAM 16.0 DAYS IN DECEMBER AND 172.00 DAYS TO DATE THIS YEAR ****

STREAM	DECEMBER VOLUME BBLS	PCT	DECEMBER WEIGHT MLBS	PCT	YEAR TO DATE VOLUME MBBLS	PCT	YEAR TO DATE WEIGHT MMLBS	PCT
**** CHARGES ****								
BUTANE	35122.	5.8	7201.	4.6	204.9	3.8	42.1	3.0
ALKYLATE	36551.	6.1	8975.	5.7	411.3	7.6	100.8	7.1
PYRO GASOLINE	0.	0.0	0.	0.0	2.1	0.0	0.6	0.0
LSR GASOLINE	900.	0.1	236.	0.1	60.3	1.1	15.5	1.1
LIGHT CRACKED GA	73071.	12.1	19729.	12.5	600.5	11.1	155.6	11.0
CASINGHEAD GASO	45027.	7.5	11992.	7.6	312.7	5.8	80.0	5.6
POLY GASOLINE	15580.	2.6	4026.	2.6	167.1	3.1	41.4	2.9
FCC GASOLINE	213773.	35.4	57200.	36.3	2326.3	42.9	600.6	42.4
NO. 2 REFORMATE	60031.	10.0	15962.	10.1	403.4	7.4	114.7	8.1
NO. 3 REFORMATE	123023.	20.4	32414.	20.5	938.1	17.3	264.2	18.7
TOTAL	603078.	100.0	157734.	100.0	5426.7	100.0	1415.2	100.0
**** YIELDS ****								
REGULAR GASOLINE	603080.	100.0	157734.	100.0	5426.7	100.0	1416.8	100.1
LOSS	-2.	0.0	0.	0.0	0.0	0.0	-1.6	-0.1
TOTAL	603078.	100.0	157734.	100.0	5426.7	100.0	1415.2	100.0

**** UNIT 06 - UNLEADED BLEND HAS BEEN ON STREAM 17.0 DAYS IN DECEMBER AND 255.00 DAYS TO DATE THIS YEAR ****

STREAM	DECEMBER VOLUME BBLS	PCT	DECEMBER WEIGHT MLBS	PCT	YEAR TO DATE VOLUME MBBLS	PCT	YEAR TO DATE WEIGHT MMLBS	PCT
**** CHARGES ****								
BUTANE	42384.	6.4	8706.	5.2	449.1	4.5	92.2	3.6
ALKYLATE	88901.	13.5	21801.	13.0	1101.2	11.1	269.7	10.5
PRYO GASOLINE	0.	0.0	0.	0.0	97.1	1.0	25.9	1.0
LSR GASOLINE	476.	0.1	125.	0.1	76.4	0.8	19.4	0.8
LIGHT CRACKED GA	29247.	4.4	7896.	4.7	725.4	7.3	184.6	7.2
CASINGHEAD GASO	17071.	2.6	4546.	2.7	343.7	3.5	87.0	3.4
POLY GASOLINE	27164.	4.1	6849.	4.1	341.7	3.4	84.7	3.3
FCC GASOLINE	355675.	54.1	93116.	55.5	4634.6	46.6	1196.9	46.6
NO. 2 REFORMATE	74547.	11.3	18966.	11.3	1936.2	19.5	542.6	21.1
NO. 3 REFORMATE	22112.	3.4	5730.	3.4	236.4	2.4	63.7	2.5
TOTAL	657577.	100.0	167734.	100.0	9941.8	100.0	2566.5	100.0
**** YIELDS ****								
UNLEADED	657579.	100.0	167734.	100.0	9941.9	100.0	2568.6	100.1
LOSS	-2.	0.0	0.	0.0	0.0	0.0	-2.1	-0.1
TOTAL	657577.	100.0	167734.	100.0	9941.8	100.0	2566.5	100.0

SAL 00005428

**** UNIT 07 - SUPER UNL BLEND HAS BEEN ON STREAM 18.0 DAYS IN DECEMBER AND 167.00 DAYS TO DATE THIS YEAR ****

STREAM	DECEMBER VOLUME BBLS	DECEMBER VOLUME PCT	DECEMBER WEIGHT MLBS	DECEMBER WEIGHT PCT	YEAR TO DATE VOLUME MBBLS	YEAR TO DATE VOLUME PCT	YEAR TO DATE WEIGHT MMLBS	YEAR TO DATE WEIGHT PCT
**** CHARGES ****								
BUTANE	46281.	8.9	9499.	7.0	383.3	7.2	78.6	5.6
ALKYLATE	84422.	16.2	20728.	15.2	942.8	17.6	231.2	16.4
PYRO GASOLINE	0.	0.0	0.	0.0	20.3	0.4	5.2	0.4
LSR GASOLINE	12.	0.0	3.	0.0	3.7	0.1	0.9	0.1
LIGHT CRACKED GA	10957.	2.1	2959.	2.2	30.8	0.6	8.2	0.6
CASINGHEAD GASO	7454.	1.4	1985.	1.5	18.8	0.4	4.9	0.3
POLY GASOLINE	2860.	0.5	716.	0.5	52.0	1.0	11.8	0.8
FCC GASOLINE	37137.	7.1	9659.	7.1	694.0	13.0	166.7	11.8
NO. 2 REFORMATE	176160.	33.9	48210.	35.3	1464.1	27.4	411.0	29.1
NO. 3 REFORMATE	154830.	29.8	42851.	31.4	1740.7	32.5	494.6	35.0
TOTAL	520113.	100.0	136611.	100.0	5350.4	100.0	1413.0	100.0
**** YIELDS ****								
SUPER UNLEADED	520114.	100.0	136611.	100.0	5350.4	100.0	1414.3	100.1
LOSS	-1.	0.0	0.	0.0	0.0	0.0	-1.2	-0.1
TOTAL	520113.	100.0	136611.	100.0	5350.4	100.0	1413.0	100.0

**** UNIT 97 - AREA 1 FUEL HP HAS BEEN ON STREAM 31.0 DAYS IN DECEMBER AND 365.00 DAYS TO DATE THIS YEAR ****

STREAM		DECEMBER VOLUME BBLS	DECEMBER VOLUME PCT	DECEMBER WEIGHT MLBS	DECEMBER WEIGHT PCT	YEAR TO DATE VOLUME MBBLS	YEAR TO DATE VOLUME PCT	YEAR TO DATE WEIGHT MMLBS	YEAR TO DATE WEIGHT PCT
**** CHARGES ****									
CRYO GAS TO FUEL	FOE	177056.	36.6	48473.	37.0	2064.1	38.2	586.6	38.7
FCC TAIL GAS	FOE	54258.	11.2	17603.	13.4	697.2	12.9	229.0	15.1
GRP TAIL GAS	FOE	180039.	37.2	49543.	37.8	1995.7	37.0	547.7	36.1
PROPANE	FOE	4300.	0.9	1265.	1.0	22.7	0.4	6.7	0.4
PROPANE-PROPYLEN		0.	0.0	0.	0.0	1.6	0.0	0.3	0.0
VISTA H2 TO FUEL	FOE	14502.	3.0	2302.	1.8	104.8	1.9	17.5	1.2
JUPITER HYDROGEN	FOE	7519.	1.6	786.	0.6	36.8	0.7	3.8	0.3
H2 RICH FUEL	FOE	18845.	3.9	3490.	2.7	50.9	0.9	8.8	0.6
MISC FUEL GASES	FOE	9965.	2.1	2845.	2.2	106.4	2.0	30.6	2.0
PURCHASED FUEL	FOE	17760.	3.7	4845.	3.7	316.9	5.9	86.6	5.7
TOTAL		484244.	100.0	131152.	100.0	5397.2	100.0	1517.6	100.0
**** YIELDS ****									
CRYO FEED GAS		216318.	44.7	59969.	45.7	2469.6	45.8	700.9	46.2
CRYO GAS TO LGS	FOE	0.	0.0	0.	0.0	0.0	0.0	0.0	0.0
EXP FUEL TO VIST	FOE	82095.	17.0	22475.	17.1	973.8	18.0	277.0	18.2
FUEL CONSUMED	FOE	101110.	20.9	26519.	20.2	1215.1	22.5	336.2	22.2
AREA II MAKE-UP	FOE	67956.	14.0	17783.	13.6	709.4	13.1	194.9	12.8
FLARE	FOE	0.	0.0	0.	0.0	2.5	0.0	0.7	0.0

LOSS	16765.	3.5	4406.	3.4	26.9	0.5	8.0	0.5
TOTAL	484244.	100.0	131152.	100.0	5397.2	100.0	1517.6	100.0

SA4 000005430

**** UNIT 98 - AREA 2 FUEL HP HAS BEEN ON STREAM 31.0 DAYS IN DECEMBER AND 365.00 DAYS TO DATE THIS YEAR ****

STREAM		DECEMBER VOLUME BBLS	PCT	DECEMBER WEIGHT MLBS	PCT	YEAR TO DATE VOLUME MBBLS	PCT	YEAR TO DATE WEIGHT MMLBS	PCT
**** CHARGES ****									
PURCHASED FUEL	FOE	61931.	47.7	16889.	48.7	635.9	47.3	173.8	47.1
D-37 MIX	FOE	67956.	52.3	17783.	51.3	709.4	52.7	194.9	52.9
	TOTAL	129887.	100.0	34672.	100.0	1345.2	100.0	368.7	100.0
**** YIELDS ****									
FUEL CONSUMED	FOE	97348.	74.9	25925.	74.8	1055.6	78.5	289.5	78.5
LP DRUM MAKE-UP	FOE	29739.	22.9	7934.	22.9	289.3	21.5	79.2	21.5
	LOSS	2800.	2.2	813.	2.3	0.4	0.0	0.0	0.0
	TOTAL	129887.	100.0	34672.	100.0	1345.2	100.0	368.7	100.0

**** UNIT 99 - AREA 3 FUEL LP HAS BEEN ON STREAM 31.0 DAYS IN DECEMBER AND 365.00 DAYS TO DATE THIS YEAR ****

STREAM		DECEMBER VOLUME BBLS	PCT	DECEMBER WEIGHT MLBS	PCT	YEAR TO DATE VOLUME MBBLS	PCT	YEAR TO DATE WEIGHT MMLBS	PCT
**** CHARGES ****									
PSA TAIL GAS	FOE	18775.	38.7	3871.	32.8	225.4	43.8	48.8	38.1
HP FUEL MAKE-UP	FOE	29739.	61.3	7934.	67.2	289.3	56.2	79.2	61.9
	TOTAL	48514.	100.0	11805.	100.0	514.7	100.0	128.0	100.0
**** YIELDS ****									
FUEL CONSUMED	FOE	49027.	101.1	11941.	101.2	515.1	100.1	128.2	100.1
	LOSS	-513.	-1.1	-136.	-1.2	-0.4	-0.1	-0.1	-0.1
	TOTAL	48514.	100.0	11805.	100.0	514.7	100.0	128.0	100.0

SAL 000005431

**** UNIT 95 - FLARE SYSTEM HAS BEEN ON STREAM 31.0 DAYS IN DECEMBER AND 365.00 DAYS TO DATE THIS YEAR ****

STREAM		DECEMBER VOLUME BBLS	DECEMBER VOLUME PCT	DECEMBER WEIGHT MLBS	DECEMBER WEIGHT PCT	YEAR TO DATE VOLUME MBBLS	YEAR TO DATE VOLUME PCT	YEAR TO DATE WEIGHT MMLBS	YEAR TO DATE WEIGHT PCT
**** CHARGES ****									
PROCESS FLARE	FOE	533.	100.0	151.	100.0	7.8	100.0	2.2	100.0
	TOTAL	533.	100.0	151.	100.0	7.8	100.0	2.2	100.0
**** YIELDS ****									
PROCESS FLARE	FOE	15480.	2904.3	4957.	3286.1	224.7	2898.1	72.0	3320.5
	LOSS	-14947.	-2804.3	-4806.	-3186.1	-217.0	-2798.1	-69.8	-3220.5
	TOTAL	533.	100.0	151.	100.0	7.8	100.0	2.2	100.0

SAL 000005432

	DECEMBER						YEAR-TO-DATE					
	*** MSCF	FUEL GAS FOE	***** HHV	** FUEL BBLS	OIL ** FOE	TOTAL FOE'S	*** MMSCF	FUEL GAS MFOE	***** HHV	** FUEL MBBLS	OIL ** MFOE	TOTAL MFOE'S
**** PURCHASES/INPUTS ****												
C3 PROPANE TO FUEL	10849.	4300.	2524.	0.	0.	4300.	57.	23.	2524.	0.	0.	23.
PG PURCHASED FUEL	501671.	79691.	1012.	0.	0.	79691.	5983.	953.	1014.	0.	0.	953.
IJ JUPITER HYD	147686.	7519.	324.	0.	0.	7519.	722.	37.	324.	0.	0.	37.
/H VISTA HYD	219728.	14502.	420.	0.	0.	14502.	1521.	105.	439.	0.	0.	105.
TOTAL	879934.	106012.	767.	0.	0.	106012.	8283.	1117.	859.	0.	0.	1117.
(*** EXPORTS/OUTPUTS ****												
:F EXPORT FUEL GAS	533089.	82095.	981.	0.	0.	82095.	5575.	974.	1112.	0.	0.	974.
:L FUEL DRUM FLARE	0.	0.	0.	0.	0.	0.	17.	2.	930.	0.	0.	2.
TOTAL	533089.	82095.	981.	0.	0.	82095.	5592.	976.	1112.	0.	0.	976.
:*** PRODUCED FUEL GAS ****												
2 NO. 3 CRU & HDS	0.	0.	0.	0.	0.	0.	6.	1.	581.	0.	0.	1.
5 GAS REC PLANT	929444.	180039.	1234.	0.	0.	180039.	10589.	1999.	1202.	0.	0.	1999.
9 HYDROGEN SYSTEM	219383.	19430.	564.	0.	0.	19430.	2623.	245.	595.	0.	0.	245.
5 FCC UNIT	284388.	54258.	1215.	0.	0.	54258.	3734.	714.	1218.	0.	0.	714.
3 CRYO GAS PLANT	1149218.	177056.	981.	0.	0.	177056.	11828.	2064.	1111.	0.	0.	2064.
1 CAT POLY UNIT	0.	0.	0.	0.	0.	0.	3.	1.	2445.	0.	0.	1.
0 REFORM FEED PREP	2239.	509.	1448.	0.	0.	509.	20.	5.	1471.	0.	0.	5.
2 NO. 2 CRU & HDS	228349.	18190.	507.	0.	0.	18190.	381.	31.	511.	0.	0.	31.
2 CASINGHEAD UNIT	26352.	8983.	2171.	0.	0.	8983.	188.	66.	2229.	0.	0.	66.
3 ALKYLATION UNIT	0.	0.	0.	0.	0.	0.	21.	11.	3294.	0.	0.	11.
1 SULFUR PLANT	4861.	473.	620.	0.	0.	473.	52.	5.	620.	0.	0.	5.
7 CRYO FEED GAS	-1290234.	-216318.	1068.	0.	0.	-216318.	-13327.	-2470.	1180.	0.	0.	-2470.
TOTAL	1554000.	242620.	994.	0.	0.	242620.	16118.	2671.	1055.	0.	0.	2671.
OTAL REFINERY FUEL	1900845.	266537.	893.	0.	0.	266537.	18809.	2812.	952.	0.	0.	2812.
*** CONSUMED FUEL GAS ****												
7 POWER PLANT	438680.	64043.	930.	0.	0.	64043.	3993.	616.	983.	0.	0.	616.
3 NO. 3 CTU & VAC	280336.	41583.	945.	0.	0.	41583.	2855.	445.	992.	0.	0.	445.
) NO. 4 HDS	48568.	7198.	944.	0.	0.	7198.	457.	71.	993.	0.	0.	71.
4 NO. 5 HDS	23565.	3492.	944.	0.	0.	3492.	215.	33.	989.	0.	0.	33.
2 NO. 3 CRU & HDS	214748.	25508.	756.	0.	0.	25508.	1816.	227.	796.	0.	0.	227.
) PREMIUM COKER	81899.	11656.	906.	0.	0.	11656.	898.	137.	974.	0.	0.	137.
) NO. 2 COKER	198038.	23519.	756.	0.	0.	23519.	2340.	288.	784.	0.	0.	288.
NO. 1 CALCINER	37284.	5916.	1019.	0.	0.	5916.	589.	93.	1008.	0.	0.	93.
NO. 2 CALCINER	0.	0.	0.	0.	0.	0.	1069.	182.	1086.	0.	0.	182.
NO. 6 HDS	7013.	1032.	937.	0.	0.	1032.	168.	27.	1006.	0.	0.	27.
NO. 7 HDS	8298.	1264.	970.	0.	0.	1264.	134.	21.	1006.	0.	0.	21.
NO. 8 HDS	5104.	755.	942.	0.	0.	755.	67.	11.	1004.	0.	0.	11.
NO. 2 CRUDE UNIT	101243.	14334.	902.	0.	0.	14334.	896.	138.	984.	0.	0.	138.
FCC UNIT	61130.	8755.	912.	0.	0.	8755.	506.	77.	966.	0.	0.	77.
NO. 1 HDS	19951.	2828.	903.	0.	0.	2828.	151.	23.	985.	0.	0.	23.
NO. 2 CRU & HDS	105225.	15160.	917.	0.	0.	15160.	1218.	190.	992.	0.	0.	190.
THERMAL CRACKER	60351.	8562.	903.	0.	0.	8562.	564.	87.	986.	0.	0.	87.

CONOCO INC.-LAKE CHARLES REFINERY
ME08 - MONTHLY FUEL BALANCE REPORT

	DECEMBER						YEAR-TO-DATE					
	*** MSCF	FUEL GAS FOE	***** HHV	** FUEL BBLS	OIL ** FOE	TOTAL FOE'S	*** MMSCF	FUEL GAS MFOE	***** HHV	** FUEL MBBLS	OIL ** MFOE	TOTAL MFOE'S
:3 ACID PLANT	20103.	2793.	885.	0.	0.	2793.	166.	25.	959.	0.	0.	25.
:1 SULFUR PLANT	20812.	3077.	941.	0.	0.	3077.	216.	34.	1001.	0.	0.	34.
:3 HOB DISTRIBUTION	41860.	6011.	914.	0.	0.	6011.	382.	59.	988.	0.	0.	59.
TOTAL	1774208.	247486.	888.	0.	0.	247486.	18699.	2786.	949.	0.	0.	2786.
*** NET FUEL BALANCE **** (PROD - CONS)	126637.	19051.		0.	0.	19051.	111.	26.		0.	0.	26.

SAL 00000543 4

APPENDIX D

MAXIMUM QUANTITY ON-SITE

Conoco Inc.
Calculation Sheet

Job No

Title

Field

State

SAL 000005435

MAXIMUM QUANTITY ON-SITE
1987 SARA 313 REPORT
LAKE CHARLES REFINERY

(Sulfur Processing Division Profile)

SODIUM HYDROXIDE = (T-1) $550 \text{ Bbls} \times \frac{42 \text{ Ga}}{\text{Bbl}} \times \frac{\text{Cubic ft}}{7.4805 \text{ Gal}} \times \frac{62.4 \text{ lb Conc.}}{1 \text{ ft}^3} \times 0.04$

= 7,700 lb

(T-11) $550 \times \frac{42}{7.4805} \times 62.4 \times 0.5 = 96,300$ lb

(T-45) $300 \times \frac{42}{7.4805} \times 62.4 \times 0.12 = 12,600$ lb

(T-48) $300 \times \frac{42}{7.4805} \times 62.4 \times 0.5 = 52,600$ lb

(T-50A&B) $500 \times \frac{42}{7.4805} \times 62.4 \times 0.25 = 43,800$ lb

(T-54, T-55, T-56) $3 \times 220 \times \frac{42}{7.4805} \times 62.4 \times 0.25 = 57,800$ lb

(T-203) $480 \times \frac{42}{7.4805} \times 62.4 \times 0.25 = 42,000$ lb

(T-204, 205) $2 \times 350 \times \frac{42}{7.4805} \times 62.4 \times 0.25 = 61,300$ lb

(T-1801) $2,100 \times \frac{42}{7.4805} \times 62.4 \times 0.40 = 294,300$ lb

668,400 lb

$668,400 \text{ lb}$ (equiv. weight water) $\times$ 2.13 spec. gravity = 1.42×10^6 lb

$1-10 \times 10^6$ lb

Conoco Inc
Calculation Sheet

Job No.

Title

Field

State

SAL 000005436

Made By
Checked By
Date
Page

HYDROCHLORIC ACID = $1-10 \times 10^{7}$ LB (Tier Two Emergency and Hazardous Chemical Inventory, -1987)

(Sulfur Processing Division Profile)

SULFURIC ACID = (T-1802) $2{,}100 \times \frac{42}{7.4805} \times 62.4 \times 0.4$ = 294,300 LB

(T-1803) $210{,}000\,\text{gal} \times \frac{62.4}{7.4805} \times .98 \times 1.84$ = 3,158,800 LB

(T-1804, T-1805) $2 \times 126{,}000\,\text{gal} \times \frac{62.4}{7.4805} \times .95 \times 1.84$ = 3,674,500 LB

(T-1806) $84{,}000\,\text{gal} \times \frac{62.4}{7.4805} \times .90 \times 1.84$ = 1,160,400 LB

(T-1807) $42{,}000\,\text{gal} \times \frac{62.4}{7.4805} \times .90 \times 1.84$ = 580,200 LB

(D-74 – D-79) $6 \times 500\,\text{BBLS} \times \frac{42}{7.4805} \times 62.4 \times .90 \times 1.84$

= 1,740,500 LB

(D-80, D-81) $2 \times 500 \times \frac{42}{7.4805} \times 62.4 \times .98 \times 1.84$

= 631,800 LB

1.13×10^{7} LB

$1 \times 10^{7} - 5 \times 10^{7}$

(Sulfur Processing Division Profile)

PHENOL = (T-1801) $2{,}100 \times \frac{42}{7.4805} \times 62.4 \times 0.40 \times 0.69$

= 203,100 LB

$1 \times 10^{5} - 1 \times 10^{6}$

CRESOL = (T-1801) 203,100 LB × 0.15 = 30,465 LB

$1 \times 10^{4} - 1 \times 10^{5}$

SAL 000005437

Calculation Sheet

Title

Job No

Field

State

ALUMINUM OXIDE = 510,900 (BENDER) + 16,800 (REF) + 21,500 (SHELL)
+ 80,500 (HCS) + 121,400 (TRILOBE) + 161,600 (SHELL)
+ 21,500 (UDP) + 640,000 (FCC) + 14,600 (ACT. ALUM)
+ 462,700 (SHELL) = 2.1×10^6 LB

$1-10 \times 10^6$ LB (BASED ON PONCA CITY)

MANGANESE = 86 BBL × 42 gal/Bbl × 11.5 lb/gal × 0.62 = 25,800 lb

$1-10 \times 10^4$ LB

AMMONIA = $1-10 \times 10^3$ (TIER TWO)

METHANOL = 15,000 Bbl × 42 Gal/Bbl / 7.48 Gal/CF × 62.4 lb/CF × 0.79 = 4.15×1

$1-10 \times 10^6$ LB

MOLYBDENUM TRIOXIDE = 80,000 × .15 = 12,000 × 8 HDS UNITS = 96,000 LB

$1-10 \times 10^4$ LB (BASED ON PONCA CITY, EXCEPT

NICKEL = 80,000 × .04 = 3200 lb Ni/Co × .74 Ni × 8 HDS Units = 18,900 LB

$1-10 \times 10^4$ LB

CHLORINE = 2 Tanks × 2000 LB/TANK × 5 C.T. = 20,000 LB

$1-10 \times 10^4$ LB (Power House Profile)

PHOSPHORIC ACID = 16,000 × .62 = 9900 LB (BASED ON PONCA CITY
CONSIDERING LAKE CHARLES SIZE
ESTIMATE $1-10 \times 10^4$ LB

SAL 000005438

Conoco Inc
Calculation Sheet

Job No.

Title

Field

State

COBALT = 80,000 × .04 = 3200 LB Ni/Co × .26 Co × 8 HDS = 6656 LB
BASED ON PONCA CITY ; CONSIDERING LAKE CHARLES SIZE
ESTIMATE $1-10 \times 10^4$ LB

SODIUM SULFATE

(T-1806) 84,000 Gal $\times \frac{62.4}{7.4805} \times 0.05 \times \frac{2}{365} \times \frac{142}{96} = 284$ lb

(T-1807) 42,000 Gal $\times \frac{62.4}{7.4805} \times 0.05 \times \frac{2}{365} \times \frac{142}{96} = 142$ lb

(D-79 - D-79) 6 × 500 Bbl $\times \frac{42}{7.4805} \times 62.4 \times 0.05 \times \frac{2}{365} \times \frac{142}{96}$
= 426 lb

ACID MIST, 420 lb $SO_4^{=} \times \frac{142}{96}$ = 630 lb

1500 lb

$1-10 \times 10^3$ LB

1,1,1 - TRICHLOROETHANE = 53 DRUMS × 55 × 8.33
= 24,300 LB

$1-10 \times 10^4$ LB

SAL 000005439

Calculation Sheet

Job No

Title

Field

State

MATERIAL		MAX. STORAGE (10^6 LB)	
CRUDE OIL		432.	
REG. GASOLINE	FINISHED GASOLINE	67.	246.9
UL GASOLINE	FINISHED GASOLINE	116.	
SUL GASOLINE	FINISHED GASOLINE	64	
UNFINISHED GASOLINE		165.	
SLOP		4.2	
REFORMER FEED		51	
KEROSENE		49.	
#2 DISTILLATE (DIESEL)		301.	

BENZENE = (432 × 0.003 + 67 × 0.014 + 116 × 0.017 + 64 × 0.024 + 165 × 0.020 + 4.2 × 0.018 + 51 × 0.01 + 49 × 0.001 + 301 × 0.001) × 10^6 = 1.0 × 10^7 LB = 1-5 × 10^7 LB

TOLUENE = (432 × 0.005 + 67 × 0.079 + 116 × 0.079 + 64 × 0.079 + 165 × 0. + 4.2 × 0.079 + 51 × 0.045 + 49 × 0.005 + 301 × 0.005) × 10
= 5-10 × 10^7 LB

ETHYL BENZENE = (432 × 0.005 + 67 × 0.017 + 116 × 0.017 + 64 × 0.0 + 165 × 0.013 + 4.2 × 0.017 + 51 × 0.01 + 49 × 0.005 + 301 × 0.005) × 10^6 = 1.1 × 10^7 = 1-5 × 10^7

XYLENES = (432 × 0.005 × 3 + 67 × 0.080 + 116 × 0.08 + 64 × 0.09 + 165 × 0.082 + 4.2 × 0.08 + 51 × 0.09 + 49 × 0.005 + 301 × 0.005) × 10^6 = 5-10 × 10^7 LB

CYCLOHEXANE = (432 × 0.005 + 67 × 0.005 + 116 × 0.005 + 64 × 0. 165 × 0.009 + 4.2 × 0.005 + 51 × 0.02 + 49 × 0.00 + 301 × 0.005) × 10^6 = 7.65 × 10^6 LB = 1-10 × 10^6

SAL 000005440

Conoco Inc
Calculation Sheet

Job No.

Title

Field

State

CUMENE = (432 × 0.005 + 67 × 0.01 + 116 × 0.01 + 64 × 0.01
+ 165 × 0.01 + 4.2 × 0.01 + 49 × 0.005 + 301 × 0.005) × 10^6
= $1-5 \times 10^7$ LB

PSEUDOCUMENE = (432 × 0.005 + 67 × 0.02 + 116 × 0.02 + 64 × 0.02
+ 165 × 0.02 + 4.2 × 0.02 + 49 × 0.005 + 301 × 0.005) ×
= 1.2×10^7 LB = $1-5 \times 10^7$ LB

STYRENE = (432 × 0.005 + 67 × 0.01 + 116 × 0.01 + 64 × 0.01
+ 165 × 0.01 + 4.2 × 0.01 + 49 × 0.005 + 301 × 0.005) ×
= $1-5 \times 10^7$ LB

NAPHTHALENE = (49 × 0.03 + 301 × 0.03) × 10^6 = 10×10^6 LB
= $1-10 \times 10^6$ LB

BIPHENYL = $\left(\frac{0.364}{2} \times 165 \times 0.01\right) \times 10^6$ = 0.3×10^6 LB
= $1-10 \times 10^5$ LB

ETHYLENE = From P.C. Bluebook and Calculations

$\frac{21{,}000 \text{ LB. Ethy. Max on Site}}{1.41 \times 10^8 \text{ LB Ethy. Produced/year}} = 1.50 \times 10^{-4} \frac{\text{lb Eth. on site}}{\text{lb Eth prod/yr}}$

L.C. Bluebook:

$18{,}800 \times 10^6$ SCF F.G. × $\left(\frac{1 \text{ lb mol F.G.}}{379 \text{ SCF F.G.}}\right)\left(\frac{26.632 \text{ lb. F.G.}}{\text{lb mol F.G.}}\right)$

= 1.32×10^9 lb F.G. × 0.1 = 1.32×10^8 lb Eth. P

Using the P.C. Ratio for L.C. $\left(1.50 \times 10^{-4} \frac{\text{lb Eth on site}}{\text{lb Eth prod./yr}}\right)\left(1.32 \times 10^8 \text{ lb Eth prod/yr}\right)$
= 1.98×10^4 lb Ethy on s

= $1-10 \times 10^4$ LB

PROPYLENE = $1-10 \times 10^5$ LB
1,3-BUTADIENE = $1-10 \times 10^3$ LB

BASED ON COMPARISON WITH FONCA CIT AND LAKE CHARLES COMPARISON OF FUEL GAS STORED ON SITE

Conic Kool Tanks- 1987

PRODUCT NAME	TANK NO.	CAP. MBBLS	DIAM. FT	TURN OVERS PER YEAR	VAPOR PRESS PSIA	VAPOR MOL. WT.	VAPOR SPACE FT	PAINT FACTOR	SIZE FACTOR	TURNOVER FACTOR	ING LOSS TPY	WORKING LOSS TPY	TOTAL LOSS TPY
REFORMER FEED	193	80.0	120.0	1.5	1.3000	68.0	19.9	1.00	1.00	1.00	12.55	5.35	17.90
REFORMER FEED	68	55.0	100.0	4.1	1.3000	68.0	19.7	1.00	1.00	1.00	9.11	10.05	19.16
REFORMER FEED	69	55.0	100.0	4.1	1.3000	68.0	19.7	1.00	1.00	1.00	9.11	10.05	19.16
CRACKED DIST	21	25.0	67.0	5.0	0.0150	68.0	19.9	1.00	1.00	1.00	0.21	0.06	0.27
KEROSENE	94	2.5	25.0	10.3	0.0150	130.0	14.3	1.00	0.97	1.00	0.06	0.03	0.08
KEROSENE	95	2.5	25.0	10.3	0.0150	130.0	14.3	1.00	0.97	1.00	0.06	0.03	0.08
KEROSENE	35	80.0	120.0	10.3	0.0150	130.0	19.9	1.00	1.00	1.00	1.09	0.81	1.89
# 2 DISTILLATE	81	120.0	134.0	28.6	0.0120	130.0	23.9	1.00	1.00	1.00	1.24	2.70	3.94
# 2 DISTILLATE	82	150.0	150.0	10.3	0.0120	130.0	23.8	1.00	1.00	1.00	1.50	1.21	2.72
# 2 DISTILLATE	201	25.0	67.0	467.8	0.0120	130.0	19.9	1.00	1.00	1.00	0.34	9.20	9.54
# 2 DISTILLATE	202	15.0	60.0	467.8	0.0120	130.0	14.9	1.00	1.00	1.00	0.24	5.52	5.76
# 2 DISTILLATE	343	80.0	120.0	3.8	0.0120	130.0	19.9	1.00	1.00	1.00	0.93	0.24	1.17
# 2 DISTILLATE	351	80.0	120.0	3.8	0.0120	130.0	19.9	1.00	1.00	1.00	0.93	0.24	1.17
# 2 DISTILLATE	370	80.0	120.0	3.8	0.0120	130.0	19.9	1.00	1.00	1.00	0.93	0.24	1.17
# 2 DISTILLATE	74	150.0	150.0	29.8	0.0120	130.0	23.8	1.00	1.00	1.00	1.50	3.51	5.02
# 2 DISTILLATE	75	150.0	150.0	29.8	0.0120	130.0	23.8	1.00	1.00	1.00	1.50	3.51	5.02
# 2 DISTILLATE	76	150.0	150.0	29.8	0.0120	130.0	23.8	1.00	1.00	1.00	1.50	3.51	5.02
# 2 DISTILLATE	378	80.0	120.0	3.8	0.0120	130.0	19.9	1.00	1.00	1.00	0.93	0.24	1.17
# 2 DISTILLATE	22	25.0	67.0	108.3	0.0120	130.0	19.9	1.00	1.00	1.00	0.34	2.13	2.47
OP FDSTK	344	80.0	120.0	19.9	0.0120	130.0	19.9	1.00	1.00	0.95	0.93	1.19	2.12
OP FDSTK	345	150.0	150.0	0.0	0.0120	130.0	23.8	1.00	1.00	0.95	1.50	0.00	1.50
LT. FEEDSTOCK	342	80.0	120.0	4.9	0.0120	130.0	19.9	1.00	1.00	0.60	0.93	0.18	1.12
LT. FEEDSTOCK	340	80.0	120.0	4.9	0.0120	130.0	19.9	1.46	1.00	0.60	1.36	0.18	1.55
HVY. FEEDSTOCK	297	80.0	117.0	4.9	0.0120	130.0	20.9	1.46	1.00	0.85	1.34	0.26	1.60
HVY. FEEDSTOCK	338	80.0	117.0	8.5	0.0120	130.0	20.9	1.46	1.00	0.85	1.34	0.45	1.79
GAS OIL	36	80.0	120.0	26.6	0.0001	190.0	19.9	1.46	1.00	1.00	0.08	0.02	0.10
GAS OIL	37	80.0	120.0	28.6	0.0001	190.0	19.9	1.46	1.00	1.00	0.08	0.02	0.10
GAS OIL	83	120.0	134.0	8.5	0.0001	190.0	23.9	1.46	1.00	1.00	0.10	0.01	0.11
GAS OIL	100	150.0	150.0	28.6	0.0001	190.0	23.8	1.00	1.00	1.00	0.08	0.04	0.13
GAS OIL	101	150.0	150.0	28.6	0.0001	190.0	23.8	1.00	1.00	1.00	0.08	0.04	0.13
SLURRY	71	25.0	67.0	5.0	0.0001	190.0	19.9	1.46	1.00	1.00	0.03	0.00	0.03
SLURRY	72	25.0	67.0	5.0	0.0001	190.0	19.9	1.46	1.00	1.00	0.03	0.00	0.03
SLURRY	73	25.0	67.0	4.7	0.0001	190.0	19.9	1.00	1.00	1.00	0.02	0.00	0.02
SLURRY	299	80.0	117.0	5.0	0.0001	190.0	20.9	1.00	1.00	1.00	0.05	0.00	0.06
SLURRY	308	80.0	117.0	5.0	0.0001	190.0	20.9	1.00	1.00	1.00	0.05	0.00	0.06
COKER FEED	67	55.0	100.0	13.6	0.0001	190.0	19.7	1.46	1.00	1.00	0.06	0.01	0.06
COKER FEED	91	80.0	120.0	1.8	0.0001	190.0	19.9	1.46	1.00	1.00	0.08	0.00	0.08
COKER FEED	20	25.0	67.0	13.6	0.0001	190.0	19.9	1.00	1.00	1.00	0.02	0.00	0.02
COKER FEED	66	55.0	100.0	6.3	0.0001	190.0	19.7	1.46	1.00	1.00	0.06	0.00	0.06
COKER FEED	90	80.0	120.0	13.6	0.0001	190.0	19.9	1.46	1.00	1.00	0.08	0.01	0.09
COKER FEED	400	25.0	78.0	15.5	0.0001	190.0	14.7	1.00	1.00	1.00	0.02	0.00	0.03
COKER FEED	3801	200.0	190.0	21.4	0.0001	190.0	19.8	1.30	1.00	1.00	0.15	0.04	0.19
COKER FEED	3802	200.0	190.0	21.4	0.0001	190.0	19.8	1.30	1.00	1.00	0.15	0.04	0.19
COKER FEED	3805	200.0	190.0	1.8	0.0001	190.0	19.8	1.30	1.00	1.00	0.15	0.00	0.15
COKER GAS OIL	68	30.0	67.0	15.5	0.0001	190.0	23.9	1.00	1.00	1.00	0.02	0.00	0.03
# 6 FUEL OIL	84	150.0	150.0	8.5	0.0001	190.0	23.8	1.46	1.00	1.00	0.12	0.01	0.14
# 6 FUEL OIL	89	150.0	150.0	1.8	0.0001	190.0	23.8	1.46	1.00	1.00	0.12	0.00	0.13
# 6 FUEL OIL	355	15.0	58.0	3.8	0.0001	190.0	15.9	1.46	1.00	1.00	0.02	0.00	0.02
# 6 FUEL OIL	354	15.0	58.0	3.8	0.0001	190.0	15.9	1.46	1.00	1.00	0.02	0.00	0.02
# 6 FUEL OIL	398	90.0	120.0	8.5	0.0001	190.0	22.3	1.46	1.00	1.00	0.08	0.01	0.09
# 6 FUEL OIL	3803	200.0	190.0	21.4	0.0001	190.0	19.8	1.30	1.00	1.00	0.15	0.04	0.19
# 6 FUEL OIL	3804	200.0	190.0	21.4	0.0001	190.0	19.8	1.30	1.00	1.00	0.15	0.04	0.19
DUST OIL	NT-1	0.6	15.0	0.0	0.0002	190.0	8.0	1.46	0.75	1.00	0.00	0.00	0.00
DOCK EDC	415	50.0	100.0	0.0	1.8375	96.6	17.0	1.00	1.00	1.00	15.62	0.00	15.62
DOCK ALCOHOL	416	55.0	110.0	0.1	0.0140	145.0	16.0	1.00	1.00	1.00	0.89	0.01	0.89
DOCK ALCOHOL	672	10.0	43.0	0.2	0.0140	145.0	20.0	1.00	1.00	1.00	0.20	0.00	0.20
DOCK LAB	910	25.0	60.0	0.1	0.0002	190.0	24.0	1.00	1.00	1.00	0.03	0.00	0.03
OLEFIN	4300	0.3	11.0	0.0	0.1500	100.0	7.5	1.00	0.59	1.00	0.02	0.00	0.02
HEXANOL	4301	0.1	8.0	0.0	0.1000	100.0	5.0	1.00	0.53	1.00	0.01	0.00	0.01
RAFFINATE	[illegible]	[illegible]	[illegible]	[illegible]	[illegible]	[illegible]	[illegible]	[illegible]	[illegible]	[illegible]	[illegible]	[illegible]	[illegible]

SAL 00000542

SAL 000005443

TOTAL CAPACITY (MBBLS)= 4708.2 THROUGHPUT (MBBLS/YR)= 85.4

| | | |

PRODUCT NAME	TANK NO.	CAP. MBBL	DIAMETER FEET	TURNOVERS PER YEAR	TRUE VAPOR PRESS PSIA	VAPOR MOL. WT.	LIQ DENS LB/GAL	CRUDE FACTOR	WIND VEL MPH	CLINGAGE FACTOR	RFI STG. LOSS TPY	PRIMARY STG. LOSS TPY	WITH. LOSS TPY	TOTAL LOSS RFI SEAL TPY	TOTAL LOSS PRIMARY SEAL TPY	REDUCTION TO DATE TPY
CRUDE OIL	102	150	150	23.3	4.0	50.0	7.1	0.40	8.4	0.0015	0.3	3.5	0.1	0.5	3.6	3.1
CRUDE OIL	346	250	200	23.3	4.0	50.0	7.1	0.40	8.4	0.0015	0.5	4.6	0.1	0.6	4.8	4.2
CRUDE OIL	347	250	200	23.3	4.0	50.0	7.1	0.40	8.4	0.0015	0.5	4.6	0.1	0.6	4.8	4.2
CRUDE OIL	371	400	250	49.9	4.0	50.0	7.1	0.40	8.4	0.0015	0.6	5.8	0.4	1.0	6.2	5.2
CRUDE OIL	372	200	180	49.9	4.0	50.0	7.1	0.40	8.4	0.0015	0.4	4.2	0.3	0.7	4.4	3.7
CRUDE OIL	373	200	180	49.9	4.0	50.0	7.1	0.40	8.4	0.0015	0.4	4.2	0.3	0.7	4.4	3.7
FINISHED GASOLINE	25	25	67	16.3	8.6	64.0	5.6	1.00	8.4	0.0060	1.4	13.6	0.1	1.5	13.7	12.2
FINISHED GASOLINE	26	25	67	16.3	8.6	64.0	5.6	1.00	8.4	0.0060	1.4	13.6	0.1	1.5	13.7	12.2
FINISHED GASOLINE	30	80	120	21.1	8.6	64.0	5.6	1.00	4.0	0.0060	1.2	8.0	0.2	1.4	8.2	6.8
FINISHED GASOLINE	32	80	120	23.1	8.6	64.0	5.6	1.00	8.4	0.0060	2.4	24.3	0.2	2.7	24.5	21.8
FINISHED GASOLINE	33	80	120	83.1	8.6	64.0	5.6	1.00	8.4	0.0060	2.8	24.3	0.9	3.3	25.2	21.8
FINISHED GASOLINE	64	25	67	12.1	8.6	64.0	5.6	1.00	8.4	0.0060	1.4	13.6	0.1	1.4	13.6	12.2
FINISHED GASOLINE	65	25	67	12.1	8.6	64.0	5.6	1.00	8.4	0.0060	1.4	13.6	0.1	1.4	13.6	12.2
FINISHED GASOLINE	78	120	134	0.0	8.6	64.0	5.6	1.00	8.4	0.0060	2.7	27.1	0.0	2.7	27.1	24.4
FINISHED GASOLINE	79	120	134	21.1	8.6	64.0	5.6	1.00	8.4	0.0060	2.7	27.1	0.3	3.0	27.4	24.4
FINISHED GASOLINE	80	120	134	23.1	8.6	64.0	5.6	1.00	8.4	0.0060	2.7	27.1	0.3	3.1	27.4	24.4
FINISHED GASOLINE	92	25	67	26.6	8.6	64.0	5.6	1.00	8.4	0.0060	1.4	13.6	0.2	1.5	13.7	12.2
FINISHED GASOLINE	93	25	67	26.6	8.6	64.0	5.6	1.00	8.4	0.0060	1.4	13.6	0.2	1.5	13.7	12.2
FINISHED GASOLINE	87	150	150	36.2	8.6	64.0	5.6	1.00	8.4	0.0060	3.1	30.3	0.6	3.6	30.9	27.3
FINISHED GASOLINE	88	150	150	29.2	8.6	64.0	5.6	1.00	8.4	0.0060	3.1	30.3	0.5	3.5	30.8	27.3
UNFINISHED GASOLINE	27	25	67	15.5	8.6	68.0	5.6	1.00	8.4	0.0060	1.4	14.4	0.1	1.5	14.5	13.0
UNFINISHED GASOLINE	59	25	67	74.2	8.6	68.0	5.6	1.00	8.4	0.0060	1.4	14.4	0.4	1.9	14.8	13.0
UNFINISHED GASOLINE	85	150	150	21.1	8.6	68.0	5.6	1.00	8.4	0.0060	3.2	32.2	0.3	3.6	32.6	29.0
UNFINISHED GASOLINE	31	80	120	36.2	8.6	68.0	5.6	1.00	8.4	0.0060	2.6	25.8	0.4	3.0	26.2	23.2
UNFINISHED GASOLINE	77	120	134	30.5	8.6	68.0	5.6	1.00	8.4	0.0060	2.9	28.8	0.5	3.4	29.4	25.9
UNFINISHED GASOLINE	3	2	21	2.5	8.6	68.0	5.6	1.00	8.4	0.0060	0.5	4.5	0.0	0.5	4.5	4.1
UNFINISHED GASOLINE	98	35	80	35.1	8.6	68.0	5.6	1.00	8.4	0.0060	1.7	17.2	0.2	2.0	17.4	15.5
UNFINISHED GASOLINE	99	35	80	35.1	8.6	68.0	5.6	1.00	8.4	0.0060	1.7	17.2	0.2	2.0	17.4	15.5
UNFINISHED GASOLINE	18	15	52	35.5	8.6	68.0	5.6	1.00	8.4	0.0060	1.1	11.2	0.2	1.3	11.3	10.1
UNFINISHED GASOLINE	86	150	150	4.1	8.6	68.0	5.6	1.00	8.4	0.0060	3.2	32.2	0.1	3.2	32.3	29.0
LIGHT COKER GAS OIL-O	23	15	52	130.2	0.0	130.0	5.6	1.00	8.4	0.0060	0.0	0.0	0.6	0.6	0.6	0.0
UNFINISHED GASOLINE	199	30	67	127.5	8.6	68.0	5.6	1.00	8.4	0.0060	1.4	14.4	0.9	2.4	15.3	13.0
UNFINISHED GASOLINE	19	15	52	35.5	8.6	68.0	5.6	1.00	8.4	0.0060	1.1	11.2	0.2	1.3	11.3	10.1
LIGHT COKER GAS OIL-O	24	15	52	130.2	0.0	130.0	5.6	1.00	8.4	0.0060	0.0	0.0	0.6	0.6	0.6	0.0
UNFINISHED GASOLINE	61	10	43	15.5	8.6	68.0	5.6	1.00	8.4	0.0060	0.9	9.1	0.1	1.0	9.2	8.2
UNFINISHED GASOLINE	62	10	43	15.5	8.6	68.0	5.6	1.00	8.4	0.0060	0.9	9.1	0.1	1.0	9.2	8.2
KEROSENE-O	34	80	120	10.3	0.0	130.0	7.0	1.00	8.4	0.0060	0.0	0.1	0.1	0.1	0.2	0.1
SLOP	42	5	32	43.9	8.6	50.0	7.1	1.00	8.4	0.0060	0.5	5.1	0.1	0.6	5.2	4.5
SLOP	43	5	32	43.9	8.6	50.0	7.1	1.00	8.4	0.0060	0.5	5.1	0.1	0.6	5.2	4.5
SLOP	70	4	32	0.0	8.6	50.0	7.1	1.00	8.4	0.0060	0.5	5.1	0.0	0.5	5.1	4.5
DOCK LT. PARAFFIN	159	85	110	0.3	0.0	142.3	6.1	10.00	8.4	0.0015	0.2	1.8	0.0	0.2	1.8	0.0
DOCK HVY. PARAFFIN	402	55	110	0.4	0.0	170.3	6.2	10.00	8.4	0.0015	0.0	0.2	0.0	0.0	0.2	0.0
DOCK METHANOL	404	15	58	16.9	2.0	32.0	6.6	10.00	8.4	0.0015	1.0	0.6	0.0	1.0	0.6	0.0
HEAVY PARAFFIN	96	3	25	4.0	0.0	170.3	6.2	10.00	8.4	0.0015	0.0	0.1	0.0	0.0	0.1	0.0
HEAVY PARAFFIN	97	3	25	4.0	0.0	170.3	6.2	10.00	8.4	0.0015	0.0	0.1	0.0	0.0	0.1	0.0
PARAFFIN	194	80	120	0.0	0.0	142.3	6.1	10.00	8.4	0.0015	0.2	1.9	0.0	0.2	1.9	0.0
LT. PARAFFIN	195	3	28	4.3	0.0	142.3	6.1	10.00	8.4	0.0015	0.0	0.5	0.0	0.0	0.5	0.0
LT. PARAFFIN	196	3	28	4.3	0.0	142.3	6.1	10.00	8.4	0.0015	0.0	0.5	0.0	0.0	0.5	0.0
MTBE	NT-1	25	67	0.0	6.0	88.0	6.3	1.00	8.4	0.0015	1.1	11.2	0.0	1.1	11.2	10.1
MIXED XYLENES	NT-2	30	73	0.0	0.4	106.0	7.3	1.00	8.4	0.0060	0.1	0.8	0.0	0.1	0.8	0.7
MIXED XYLENES	NT-3	30	73	0.0	0.4	106.0	7.3	1.00	8.4	0.0060	0.1	0.8	0.0	0.1	0.8	0.7
REFORMATE STRE-CUT	NT-4	55	100	0.0	2.0	81.0	7.4	1.00	8.4	0.0015	0.4	4.3	0.0	0.4	4.3	3.9
PARAXYLENE	NT-5	55	100	0.0	0.6	106.0	7.3	1.00	8.4	0.0060	0.2	1.6	0.0	0.2	1.6	1.5
PARAXYLENE	NT-6	55	100	0.0	0.6	106.0	7.3	1.00	8.4	0.0060	0.2	1.6	0.0	0.2	1.6	1.5
HEAVY REFORMATE	NT-7	10	43	0.0	0.4	106.0	7.3	1.00	8.4	0.0060	0.0	0.5	0.0	0.0	0.5	0.4
PARAXYLENE	NT-8	5	30	0.0	0.4	106.0	7.3	1.00	8.4	0.0060	0.0	0.0	0.0	0.0	0.0	0.0
PARAXYLENE	NT-9	5	30	0.0	0.4	106.0	7.3	1.00	8.4	0.0060	0.0	0.0	0.0	0.0	0.0	0.0
											60.7	590.2	10.3	71.0	600.5	525.5

TOTAL CAPACITY (MBBLS) = 3841 THROUGHPUT (MMBBLS/YR) = 109.8

EMISSIONS TO DATE - 75.0

48

60

108

SAL 000005444

1. SULFUR PROCESSING DIVISION

The Profile provides a general look at the Sulfur Processing Division. The process information given here will be expanded in depth in the individual manual sections.

PURPOSE

The Sulfur Processing Division is responsible for:

1. The unloading and/or loading of sulfur, fresh or spent acids and caustics, via the loading rack; spent acid, fresh acid and spent caustic storage and transfers within the tank farm area; and the storage, mixing, and transfers throughout the refinery of various strength caustics.
2. The regeneration of spent acid from the Alkylation Unit to an acceptable grade of sulfuric acid for reuse in the alkylation process, and the processing of waste gas streams with high concentrations of ammonia (NH_3), and hydrogen sulfide (H_2S), into a marketable grade of sulfuric acid.
3. The removal of H_2S and NH_3 entrained in the sour water received from the various refinery divisions, so the water may be reused within the refinery or leave the refinery as an environmentally safe effluent, via the Reformer Division.
4. The removal of H_2S, entrained in the propane butanes (PB's) from the No. 3 CTU Division, as well as the removal of H_2S entrained in the tailgas from the various refinery divisions prior to its use as Cryogenic Unit feed and refinery fuel gas.
5. The regeneration of H_2S laden rich amine received from contactors throughout the refinery and Vista Chemicals, into a relatively H_2S - free lean amine, for reuse in the refinery and Vista Chemical

2. GENERAL DESCRIPTION

LOADING AND TRANSFER (SECTION 1)

(See Figure 1)

The loading and transfer section is divided into three parts: Loading Rack, Tank Farm, and Caustic Mixing and Transfer.

Loading Rack

1. Rail Car Loading Rack

The loading rack is made up of ten rail car loading spots (or stations) and three truck loading spots. The following products may be loaded or unloaded at each spot:

Spot 1 - Unload 50% caustic rail cars and trucks. Load spent caustic (acid oil or sulfides) rail cars and trucks.

Spot 2 - Unload 50% caustic rail cars. Load spent caustic (acid oil or sulfides) rail cars.

Spot 3 - Load or unload 93%, 96%, 98% sulfuric acid rail cars. Load or unload spent acid rail cars.

Spot 4 - Load or unload 93%, 96%, 98% sulfuric acid rail cars. Load or unload spent acid rail cars.

Spot 5 - Load 93%, 96%, 98% sulfuric acid rail cars.

Spot 6 - Load 93%, 96%, 98% sulfuric acid rail cars.

Spot 7 - Load 93%, 96%, 98% sulfuric acid rail cars.

Spot 8 - Load 93%, 96%, 98% sulfuric acid rail cars. Located at Spot 8 is a truck loading station at which 93%, 96%, 98% sulfuric acid can be loaded.

Spot 9 - Load product sulfur trucks or rail cars.

Spot 10 - Load product sulfur trucks or rail cars.

to transfer sulfides or acid oils to the loading facilities.

The SC/RC Division sends sulfides from the caustic wash tower to T-204 and is gravitated with T-203 and T-205 to provide additional storage. Sulfides from this unit are sent in batch amounts.

Sulfides in T-203, T-204, T-205 can be pumped directly to the loading rack at spots 1 and 2 or to T-1802 with P-231 or P-82. If there would be any hydrocarbons in these tanks they could be pumped to the heavy slop line going to the Pumping and Transfer Division. Provisions for truck loading is also present at these tanks.

The 98% sulfuric acid, also referred to as fresh acid, is sent to the Alky Unit, No. 2 Reformer and Power House Division, by either pressuring with nitrogen at about 35 psig or by pumping (P-1805). Fresh acid is stored in two horizontal drums, called bullet tank, D-80 and D-81. Fresh acid can also be stored, in some instances in D-78 and D-79, but these bullets are usually used as spent acid storage.

When empty, these bullets are filled from T-1803 with P-1807. P-1807 can also pump fresh acid directly to the Alky Unit.

The fresh acid sent to the Alky Unit in the Thermal Cracking Division is vital to their operation, and it is important that the acid flow not be interrupted.

The "used" or spent acid is pumped back to the storage area from the alky unit to bullet tanks D-79, D-78, D-77, D-76, D-75 and D-74. The spent acid is sent back at about 89-92% strength.

As spent acid is pumped back to the storage area, liquid hydrocarbons are sometimes entrained with the spent acid. Since hydrocarbons are lighter than spent acid, they will separate and "float" on top of the spent acid and can be removed. D-74 is reserved for storage of hydrocarbons.

Cracking and Sulfur Processing. Caustic at 25% can also be routed to the SC/RC Division.

T-50A and T-50B can also be used as 25% caustic storage. These drums are used as backup storage after dilution and mixing in T-54, T-55 or T-56 in the event of low 50% caustic inventory.

Caustic at 12% is stored in T-45 to be used by the Alky Unit for their process. T-45 is filled from one of the mix tanks (T-54, T-55 or T-56) where 12% caustic has been prepared.

T-1 is used as 4% caustic storage for the No. 3 CTU Division. This 4% caustic is transferred with pump P-221 to that unit.

25% caustic from the mix tanks and well water, at specific amounts are used to mix 4% caustic. A recirculation line from the discharge of P-221 back to T-1 continuously mixes the caustic.

SAL 000005448

SECTION PROCESS EQUIPMENT

Drums		Description
D-74		Alky Spent Acid
D-75		Alky Spent Acid
D-76		Alky Spent Acid
D-77		Alky Spent Acid
D-78		Alky Spent Acid
D-79		Alky Spent Acid
D-80		98% Acid to Alky
D-81		98% Acid to Alky
Pumps	**Driver/Innerdriver**	**Description**
R-4	Recipr. steam driven	Caustic Transfer
R-102	Recipr. steam driven	Caustic Transfer
R-113	Recipr. steam driven	Caustic Transfer
P-1804	M-1804	Alky Spent Acid to Blend Tank
P-1805	M-1805	98% Acid to Alky
P-1806	M-1806	Alky Spent Acid to Blend Tank
P-1807	M-1807	98% Acid Product Loading
P-1808	M-1808	Spare Acid Product Loading
P-1809	M-1809	93% Acid Product Loading
P-1810	M-1810	Hydrocarbon Skim Pump on T-1806
P-1811	M-1811	Spent Acid to Blend Tank
P-1801A	M-1801A	Acid Oil Loading Pump
P-1801B	M-1801B	Acid Oil or Sulfide Spare Loading Pump
P-1801C	M-1801C	Sulfide Loading Pump
P-221	M-267	4% Caustic Transfer to No. 3 CTU Division
P-82	M-265	Sulfide Loading Pump

SAL 000005449

SECTION EQUIPMENT DESCRIPTION

R-4, R-102, R-113 Caustic Transfer Pump

These are positive displacement reciprocating pumps driven from the steam piston end of the pump (steam chest) by 150 psi steam. The steam from these pumps exhaust to the atmosphere. The product side and the steam side have adjustable packing glands at the piston rods.

P-1810 and P-1811 - Spent Acid and Product Acid Transfer Pumps

These are motor driven centrifugal pumps with all wetted metal parts being made of alloy 20 to resist corrosion. These pumps are equipped with mechanical seals which are flushed with product recirculated from the discharge. The impellers and driver horsepower ratings of these pumps may be slightly different to compensate for performance requirements of each pump.

P-1801A, P-1801B, P-1801C - Sulfide and Acid Oil Loading Pumps

These are motor driven centrifugal pumps made of 316 stainless steel to prevent corrosion. These pumps are equipped with mechanical seals which are flushed with product recirculated from the discharge of the pump.

P-221 - 4% Caustic Transfer to No. 3 CTU Division

This is a motor driven, centrifugal pump made of cast iron. The pump is equipped with a mechanical seal.

P-82 - Sulfide Loading Pump (No longer in service)

This is a motor-driven single stage turbine pump with a mechanical seal.

P-231 - Sulfide Loading Pump

P-231 is a motor-driven centrifugal pump equipped with a mechanical seal.

SAL 000005450

T-50A and B - 25% Caustic Storage

This is a 9 foot 0 inch by 44 foot 0 inch long horizontal drum with a partition separating the A and B side of the drum. The total capacity of this drum is 500 barrels.

T-54, T-55 T-56 - Caustic Mix Tanks

These are open dome tanks each being 11 foot 0 inch by 12 foot 0 inch high with a capacity of 220 barrels.

T-203 - SC/RC Sulfide Storage

This is a 12 foot diameter by 24 foot high, open vent atmospheric flat roof tank with its capacity being 480 barrels.

T-204 and T-205 - SC/RC Sulfide Storage

These are 10 feet in diameter by 24 feet high, cone roof, open vent atmospheric tanks with a capacity of 350 barrels.

T-1801 and T-1802 - Acid Oil and Sulfide Storage

These are 25 foot diameter by 24 foot high dome roof tanks having a capacity of 2,100 barrels. Each is equipped with vents to the atmosphere.

T-1803, T-1804, T-1805 - Acid Product Storage Tanks

T-1803 is a 33 foot 6 inch diameter by 32 foot high dome roof tank. It has a capacity of 210,000 gallons of 98% sulfuric acid. The product enters the tank at the top and travels down an internal line to the bottom of the tank. Regulated nitrogen is pressured into the tank to provide a "blanket" to prevent air from entering the tank and causing oxidation on the tank walls. Vents are also provided on these tanks that run to ground level for added safety.

T-1804 and T-1805 are 26 foot in diameter by 32 foot high dome roof tanks with a capacity of 126,000 gallons of 93-96% sulfuric acid. The associated equipment is similar to T-1803.

SAL 000005451

Here the spilled materials can be neutralized and drained to the surface sewers or taken off with a vacuum truck. Water that accumulates in the acid storage area is disposed of in one of three places. If within specification (less than .1 ppm phenols, less than 5 ppm sulfides, pH, 6-9) the water can be drained to the storm water sewers.

Water that does not meet these specifications must be removed by vacuum truck and dumped either at the API traps or T-115. Since the No. 2 Reformer Division top operator is responsible for the waste water treating system, he must be notified anytime water is drained or hauled off.

Sulfur Product Line to Loading Rack

Since sulfur will begin to solidify below 245°F, it is important to keep the entire product line hot at all times. This is accomplished by a double wall steam jacketed line. The six inch product line is surrounded by an eight inch line. 50 psi steam is injected into the eight inch line and the condensate is trapped out at different points along the line.

Hydrogen Peroxide Addition to Rail Cars and Trucks

A tank, pump and associated piping are provided in the event hydrogen peroxide must be added to a rail car or truck. This equipment is located east of T-1805 by the retaining wall. Spots 3 through Spot 8 and the truck loading rack have the necessary connections for adding hydrogen peroxide.

SAL 000005452

1. THE PROCESS

This section of the Sulfur Processing Division Manual covers the Sulfuric Acid Unit. Within this unit four (4) distinctly different processed are combined to yield the finished product. These processes are:

1. Formation of sulfur dioxide.
2. Cooling and purification of the SO_2 gas stream.
3. Conversion of SO_2 to SO_3.
4. Absorption of SO_3 into sulfuric acid (H_2SO_4).

Because of their close interrelation to one another however, "Conversion" and "Absorption" will be combined into one step.

PURPOSE AND IMPORTANCE

The primary purpose of the Sulfuric Acid Unit is the regeneration of the Alkylation Process Unit spent acid to an acceptable grade of sulfuric acid for reuse in the Alkylation process.

The secondary purpose is to process waste gas streams with high concentrations of hydrogen sulfide and ammonia and using these environmentally objectionable components to produce a marketable grade of sulfuric acid.

The grades of sulfuric acid to be produced are 93%, 96%, and 98%.

SECTION FUNCTION

(See Figures 2.1, 2.2, 2.3, 2.4, 2.5 and 2.6)

The process may be divided into the following three (3) steps:

1. The formation of sulfur dioxide (SO_2) gas in the combustion chamber by the burning of Sour Water Stripper (SWS) overhead gas (sour gas) and Primary Amine Unit regeneration overhead gas (amine gas) and the

The cooled gas stream leaves the waste heat boiler and flows to the humidifying tower where it travels upward through a spray of circulated weak acid and is cooled by the evaporation of water from the weak acid. Sufficient acid is circulated over the tower to remove most of the solids (primarily ash from impurities such as iron in the spent acid feed to the combustion chamber) and most of the SO_3 formed in the combustion chamber.

The gases then pass through the tube side of the primary gas coolers in parallel with cooling tower water circulated through the shell side. In these coolers the gas is cooled and sufficient water is condensed into the weak acid system and returned to the humidifying tower to make up for water lost from purging to the combustion chamber and by evaporation. The process gas stream then flows in series through two electrostatic mist precipitators where the SO_3 in the form of an acid mist and those solids not previously removed in the humidifying tower are collected and drained into the weak acid system.

The process gas then flows through the tube side of the secondary gas coolers where the gas stream is further cooled by the cooling tower water circulated shell side and additional water condensed. The relatively acid free water is then pumped to the Effluent Stripper Tower to remove entrained SO_2. Atmospheric air brought into the effluent stripper tower contacts the circulated water, removing the entrained SO_2 and the water is sent to the neutralization pit via the weak acid drain system. The SO_2 enriched air leaves the effluent stripper tower via the overhead line and joins with the process gas stream before entering the secondary coolers.

The process gas from the Secondary Coolers flows through an entrainment separator for further drying. At this point dilution air may be added to

SAL 000005454

The partially converted first pass outlet gas then passes through the tube side of the hot heat exchanger where it is cooled by the first converter bed inlet gas before it enters the second converter bed.

The second converter bed outlet gas then passes through the tube side of the hot interpass heat exchanger where it is cooled by the fourth converted bed inlet gas before entering the third converter bed.

Partially converted third converted bed outlet gas goes through the tube side of the cold heat exchanger where it is cooled by the SO_2 gas stream from the discharge of the main blower.

The gas stream from the cold heat exchanger flows to the tube side of the combustion air preheater and is further cooled before entering the interpass absorbing tower. In the interpass tower the SO_3 in the gas stream is absorbed into the 98% acid circulated over the tower.

The cool gas stream, leaving the interpass tower and still containing unreacted SO_2 flows through the shell side of the cold interpass heat exchanger where it is heated by the fourth converter bed outlet gas. From here, the gas stream enters the shell side of the hot interpass heat exchanger, where it is further heated by the second converter bed outlet gas before entering the fourth converter bed where final conversion of SO_2 to SO_3 is accomplished.

The gas stream upon leaving the fourth bed of the converter flows through the tube side of the cold interpass heat exchanger where it is cooled by the process gas stream from the interpass absorbing tower.

The converted gas then flows to the final absorbing tower where the SO_3 in the gas stream is absorbed in the 98% acid circulated over the tower.

SAL 000005455

SAL 00000456

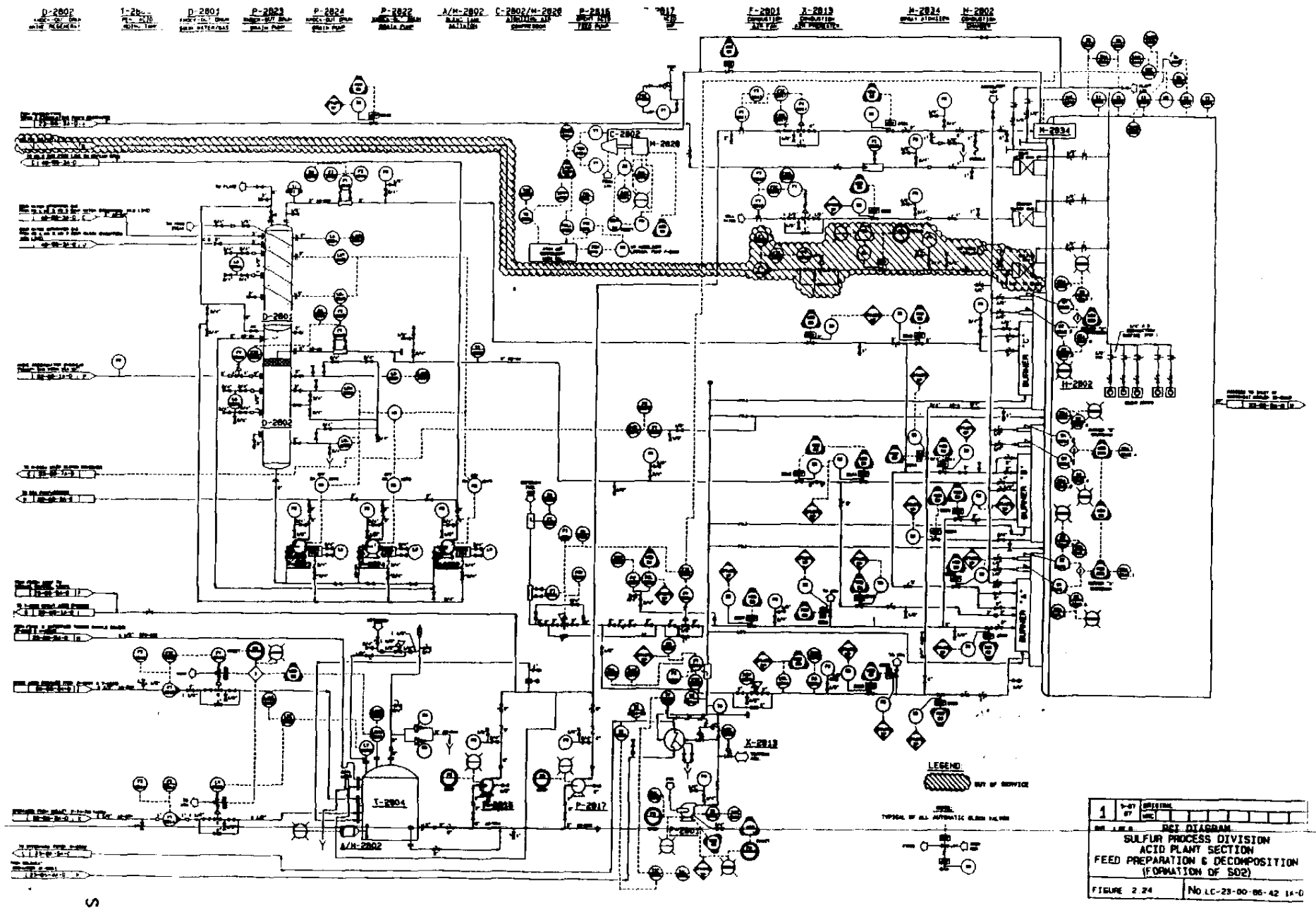

5 PUMPS

SAL 000005457

4 PUMPS

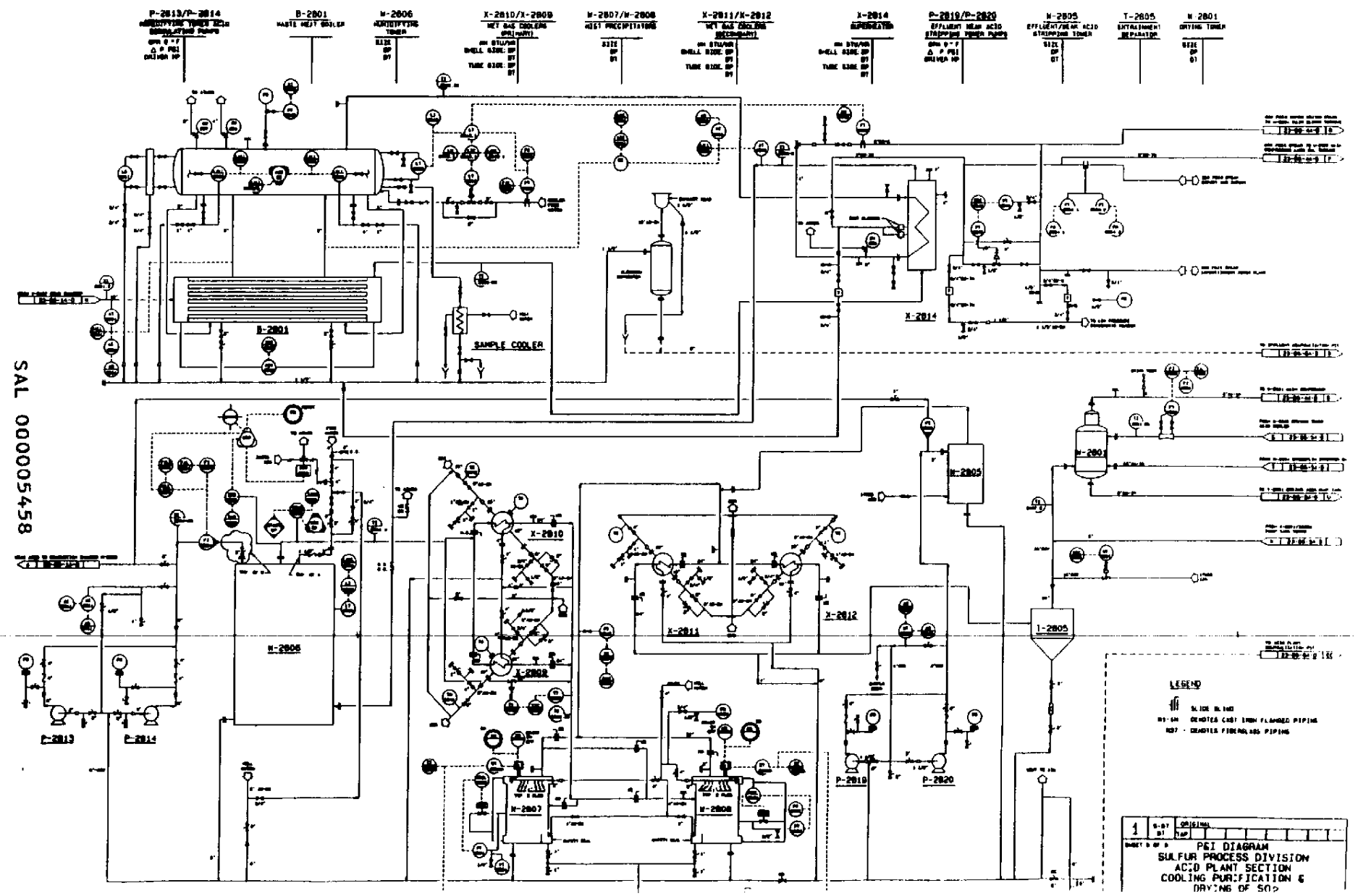

SAL 000005458

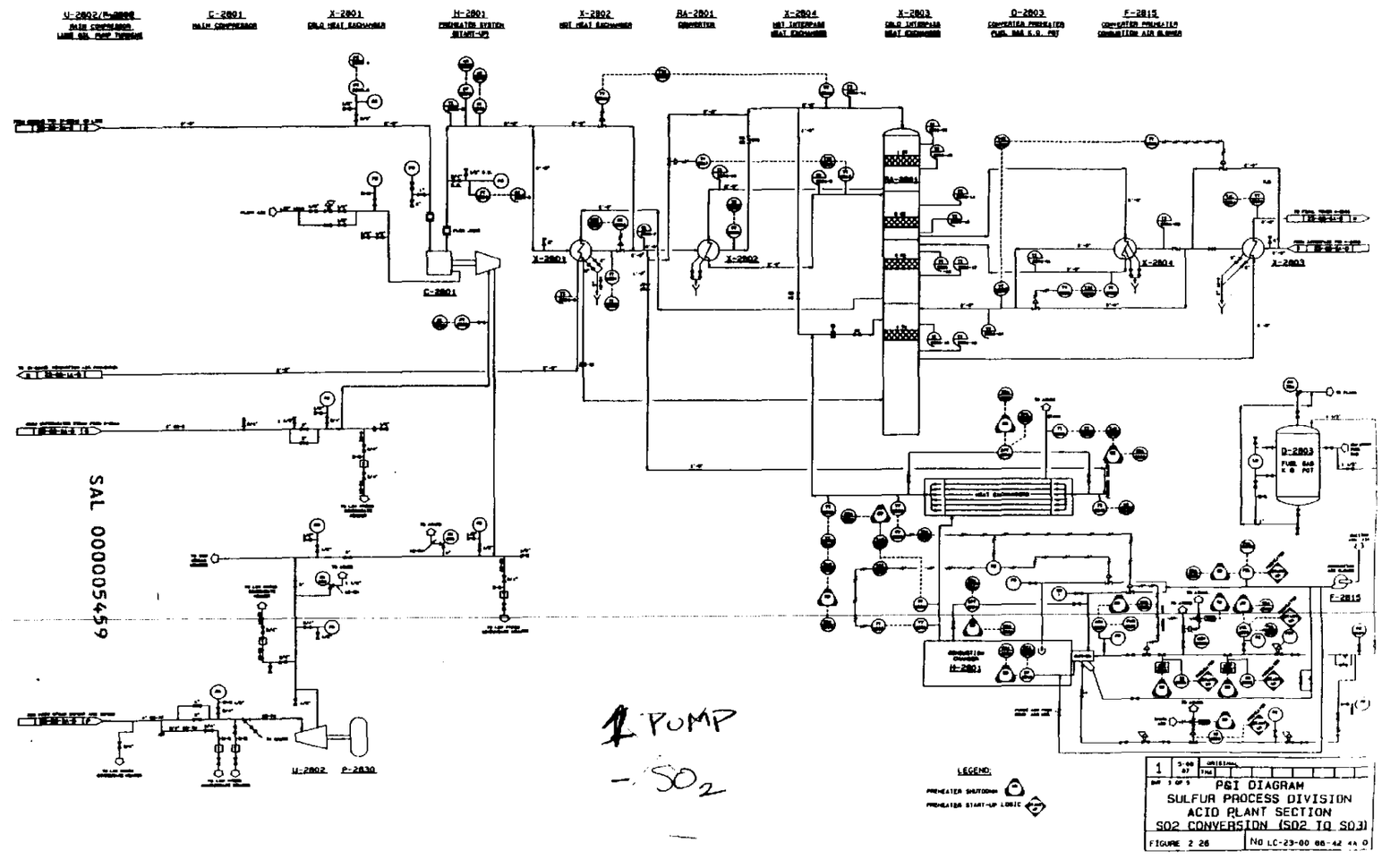

1 PUMP
- SO_2

SAL 00000459

7 PUMPS

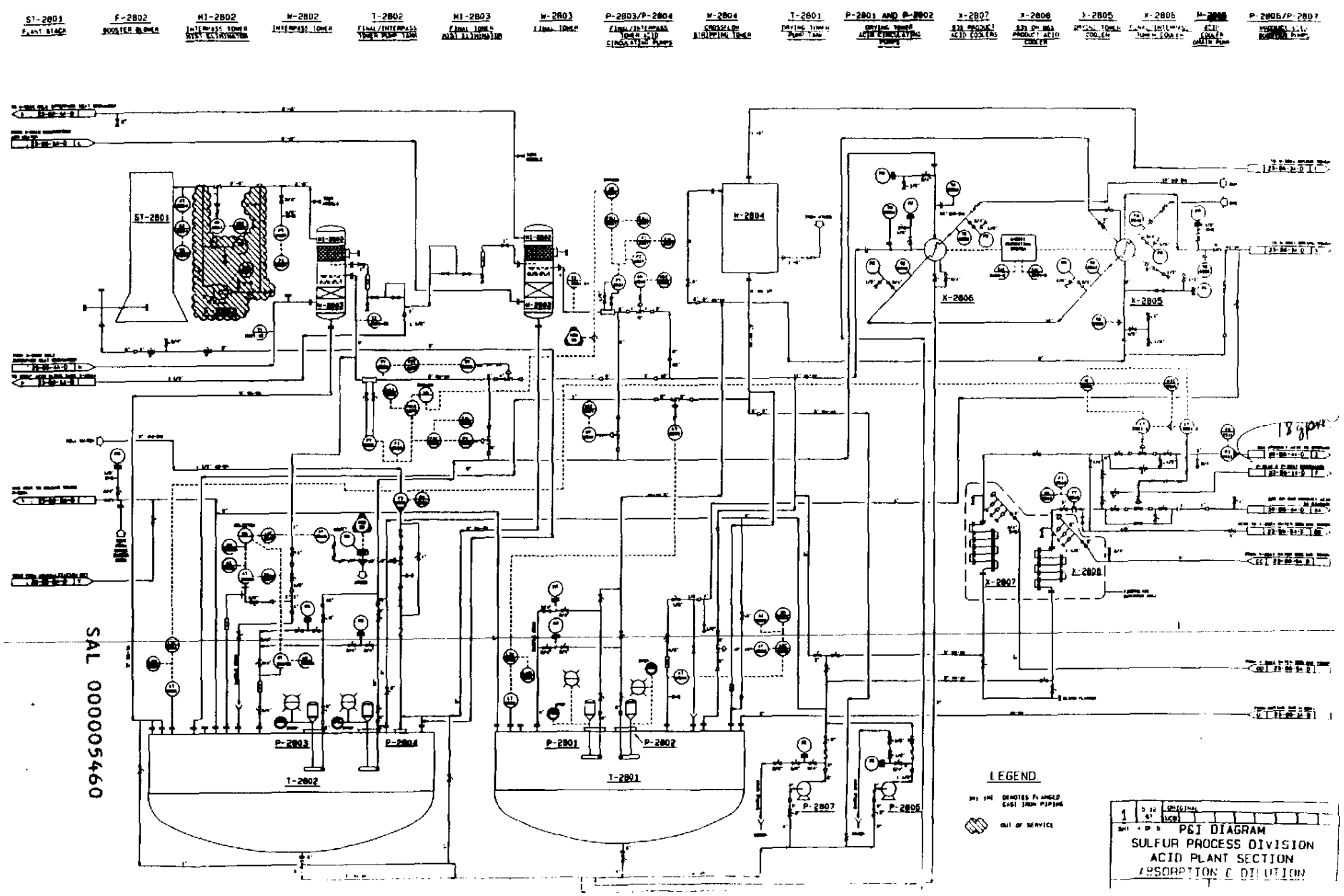

SAL 000005460

Conc <1% ?

4 PUMPS

T-2803	A-2801	P-2811 - P-2812	J-2801 - J-2802	P-2809 - P-2810	Y-2801
CAUSTIC STORAGE TANK	NEUTRALIZATION PIT AGITATOR	EFFLUENT WATER PUMPS	COOLING TOWER CHEMICAL FEED SYSTEM	COOLING TOWER PUMPS	WATER COOLING TOWER

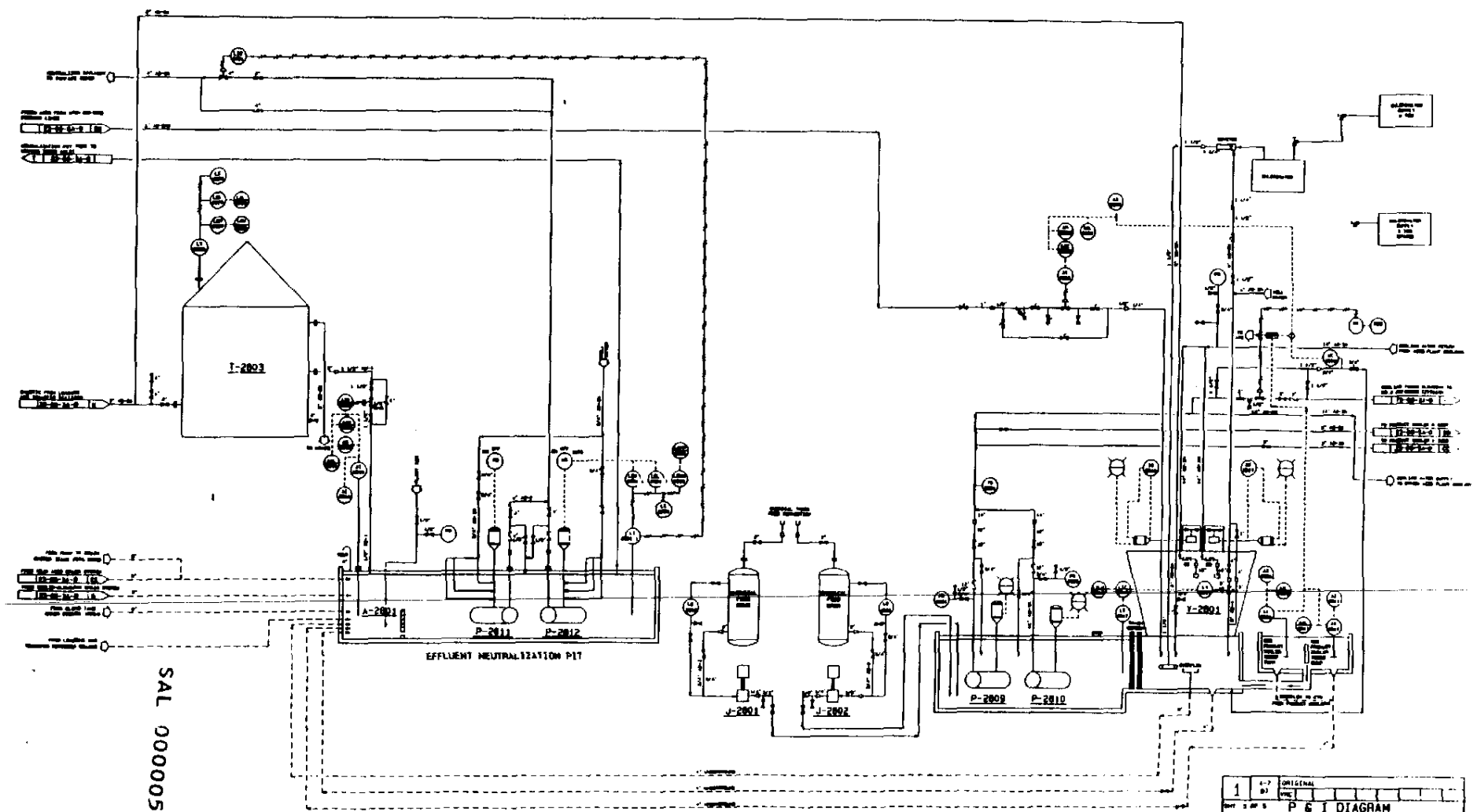

1 | 6/7 93 | ORIGINAL

P & I DIAGRAM
SULFUR PROCESS DIVISION
ACID PLANT SECTION
COOLING TWR H2O TREATING AND
EFFLUENT NEUTRALIZATION

SAL 0000054461

Plant Cooling Towers and Potable Water System (Section 7)

(See Figure 8A)

The refinery's cooling water system consists of thirteen cooling cells in three separate but interconnected cooling towers (Y-1, Y-2 and Y-3).

Heated water enters each cell through distribution valves and flows out through the distribution boxes onto the decks. The water then gravity feeds through spray cups and falls down to a grid system located in the cell interior. A fan induced air flow, crosscurrent to the falling water, extracts heat and carries it to the atmosphere. The cooled water continues downward and is collected in the tower basin. In the basin the water is treated with chlorine and then flows through two sets of screens and into the pump basin.

Except for chlorination, routine chemical treatment for the system is accomplished at the Y-2 water basin.

The cooling tower pumps take suction from the pump basin and discharge the cooled water to the cooling water supply headers where it is returned to the units. A combination of electrical and steam driven pumps provides for flexibility in power consumption and aids in optimizing plant efficiency.

All three cooling towers feed the low pressure (refinery) cooling water system while selected pumps on Y-2 and Y-3 feed the high pressure (No. 3 CTU Division) cooling water system.

The potable water system (see Figure 8A) is supplied from the well water system. The well water is chlorine treated and routed to a degasification/storage tank. The water is drawn from the tank and pumped through two backwashable sand filters before entering the potable water distribution system.

SAL 000005462

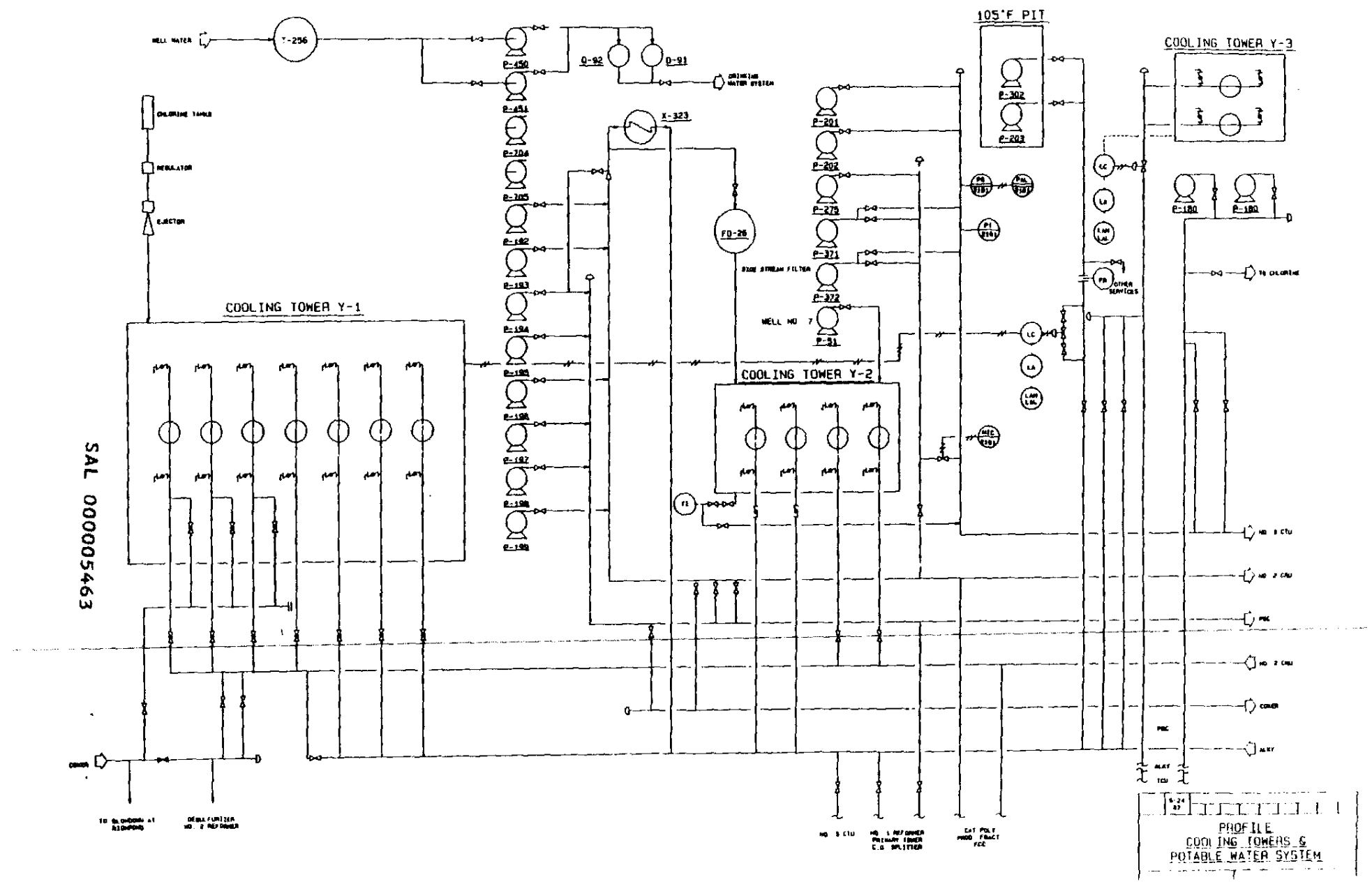

PROFILE
COOLING TOWERS &
POTABLE WATER SYSTEM

2. GENERAL DESCRIPTION

Demineralized Boiler Feedwater Make-up (Section 1)

Raw water from the plant wells is pumped to a storage tank. From the storage tank the raw water is pumped through the prefilter and then goes to the demineralizer trains for removal of dissolved metals. There are three trains.

A. Demineralized Boiler Feedwater Make-up

(See Figure 1)

Raw well water is fed to the raw water storage tank (T-105) from the raw well water system. The raw well water pumps take suction off the raw water tank and well water is pumped through a pre-filter (FD26). The pre-filter removes 90+% of the oxidized iron and suspended solids from the raw well water.

From the pre-filter the raw well water is fed to one or more of the three regenerative-type demineralizer trains for processing to insure boiler feedwater quality and supply to meet the steam generation demand. One train can be regenerating (on a regulated time sequence) while the other demin (demineralization) trains are in service.

A demin train consists of a cation exchange vessel, decarbonator (clearwell) and an anion exchange vessel. The three separate demin trains are referred to as "A," "B," and "C" trains. The three trains are operated the same, so we will only go through the operation of one train.

The filtered water first goes through a strong acid cation resin bed vessel to remove calcium, magnesium, and sodium minerals from the water.

SAL 000005464

The effluent from the strong acid cation vessel is routed to a forced draft decarbonator unit. The water is distributed in a countercurrent flow with respect to the forced air flow. The decarbonator process removes bicarbonates in the form of CO_2.

The effluent water from the forced draft decarbonator is collected in the decarbonator clearwell section. A booster pump takes suction on the clearwell and feeds the strong base anion resin bed vessel. The strong base anion bed removes chlorides, sulfates, and silica. More information will be given in Section 1 covering demineralized boiler feedwater make-up as to exactly how cation, anion and decarbonizers work.

The effluent water from the strong base anion vessel is called demin water and is routed to the demin water storage tank (T103). The demin water from the demin water storage tank is pumped as make-up water along with condensate for final treatment. This is described in the Condensate and Make-Up Water Treatment Section 5.

The in-service cycle of our demin vessel is terminated when the resins become exhausted. If a train is allowed to stay in service beyond this point, breakthrough can occur and the quality of water being processed is greatly decreased.

In order to return the exhausted resin beds of a demin train to a condition where it will again produce purified water, it has to be regenerated.

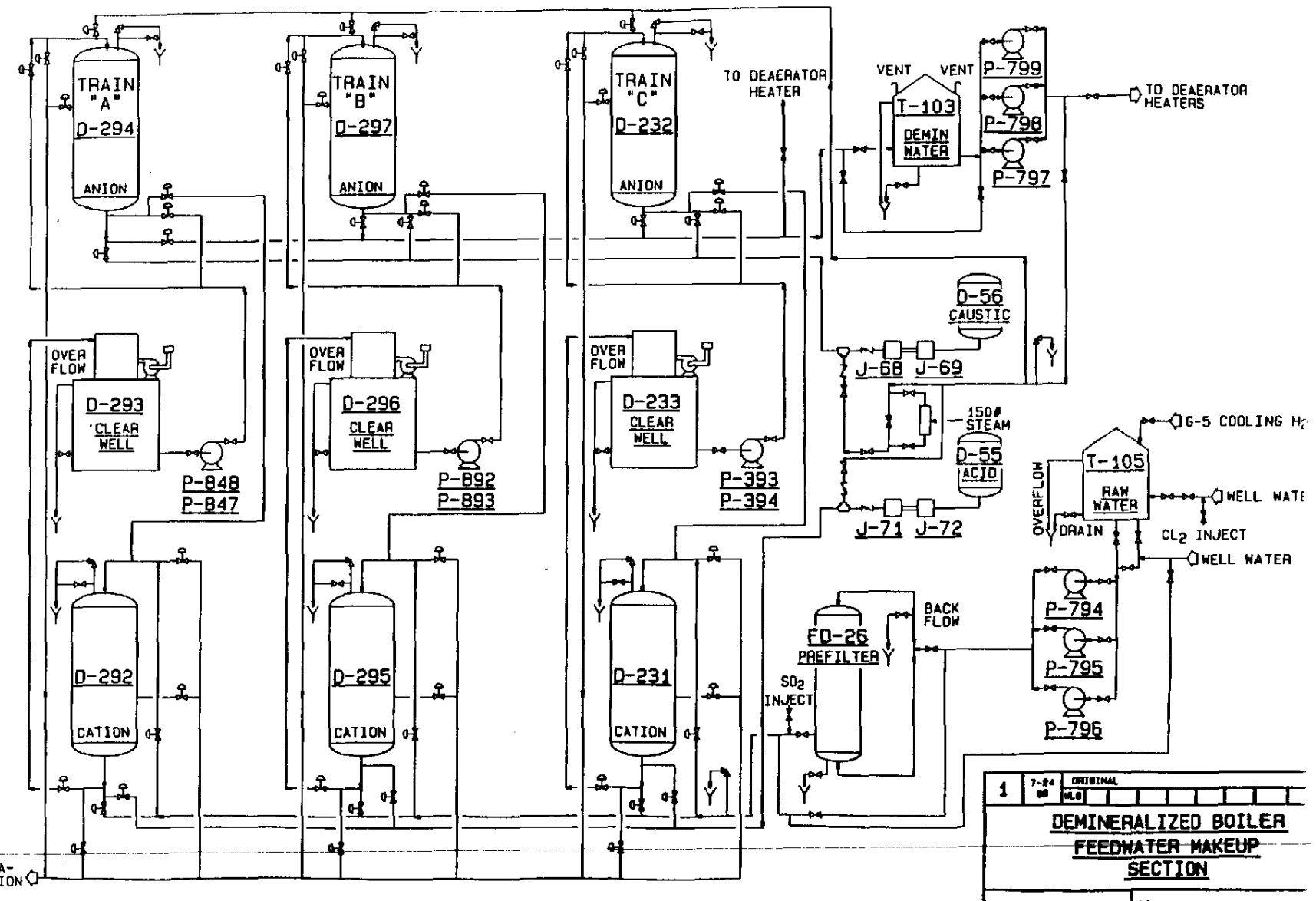

SAL 000005466

Y-4 Cooling Tower

(See Figures 2.3, 2.4, 2.5)

The removal of heat from process streams and equipment is an integral function in the refining process. Heat removal from the SC/RC and Premium Coker Divisions (PCD) is accomplished through the proper functioning of the cooling water circulation system, the Y-4 cooling tower.

Three cooling tower water pumps provide for circulation of Y-4 cooling water. Centrifugal pumps P-1501, P-1502, and P-1503 draw water from the Y-4 pump basin through 24-inch suction lines. The cooling water is pumped into the 20-inch discharge line of each pump before combining into a 24-inch cooling water supply (CWS) main. Water pumped into the main flows into the 14-inch CWS header for the SC/RC and the 14-inch CWS header for the PCD.

The PCD CWS header splits into several flows before supplying water to that unit. Cooling water flows through a 1½-inch line to the acid dilution trough in the Y-4 basin. The next tie-in provides water to the No. 2 Calciner via a 6-inch line. The PCD CWS line is also connected to a 14-inch tie-in that may be used to supply cooling water to the No. 2 Reformer. From this junction, water flows through exchangers and equipment in the PCD via the 14-inch CWS header, then into the cooling water return (CWR) header. The 14-inch CWR line from the PCD is joined by several flows before it joins the 24-inch CWR main at Y-4.

The 14-inch PCD CWR header is first joined by a 14-inch CWR line from the No. 2 Reformer. The combined flow in the PCD CWR header is joined by a flow of make-up water from the 105° pit in the No. 3 CTU Division via a 6-inch tie-in. The last tie-in to the PCD CWR header before it joins the Y-4 CWR main is the 6-inch CWR from the No. 2 Calciner. These streams

constitute the sum of return water that enters the Y-4 CWR main via the 14-inch CWR header from the PCD.

The 14-inch SC/RC CWS header supplies cooling water from the Y-4 basin to exchangers and equipment in the various sections of the SC/RC Division. This heat-laden water returns to Y-4 via a 24-inch CWR header. As it joins the CWR main, some return water flows through a sample line and empties into the Y-4 basin. In addition to providing water for circulation through the SC/RC and the PCD, the CWS main supplies high pressure water for several purposes at the Y-4 basin area. Each circulating water pump has an associated priming eductor system. EJ-1502, EJ-1503, and EJ-1504 are used to prime P-1501, P-1502, and P-1503 and are powered by water from the CWS main via a 1½-inch line. Water flows through the eductor and into the basin. This priming is necessary to start the circulating water pumps because the pumps are mounted in a suction lift installation at a distance above the level of water in the basin. High pressure water from the CWS main also flows via 1½-inch lines through a pH analyzer and the chlorinator eductor EJ-1501. The water returns to the basin after use.

Water from the CWS main is used for some cooling purposes at the pump basin area, flowing to the CWR main after use. Turbine bearing oil is cooled via 3/4-inch takeoffs from the CWS main. Cooling water for turbine/innerdrive lube oil coolers X-1502 and X-1504 is supplied via 1½-inch lines from the CWS main.

The Y-4 cooling tower has four independently operated cells, numbered from the north. Water from the CWR main flows to each cell via an 18-inch line. The flow of water through each 18-inch line is distributed equally to both halves of a cell via tee handle distribution valves. The distribution valves open into a distribution box to control the splash. Water flows from

the distribution box onto the cell deck and through the holes drilled into the deck. As water flows through the spray cap in each hole, it is broken into small streams by the blades attached to the bottom of each cap.

Water flows down through the cells, and the streams are broken into droplets by the rows of packing under the deck. This provides return water with the maximum surface area for evaporative contact with air. The crossflow of air enters the tower via side-mounted louvers and is drawn up the tower by the cell fan located in the center and at the top of the cell. The lateral air flow evaporates some of the falling water; the heated air and water vapor are exhausted to the atmosphere via the fan shroud. Evaporation is the heat-removing mechanism for Y-4. The droplets of cooled water fall into the solids settling basin where they collect and flow into the pump basin. Flowing through dual suction screens for each pump, the water becomes available to be pumped through the system again.

Water is lost from the system through evaporation, exchanger backflushing, and the intentional removal of water (blowdown). To replace this water, make-up water from the 105° pit in the No. 3 CTU Division enters Y-4 via a tie-in downstream of the PCU CWR header block valve. The 105° make-up line also provides water for P-3601, P-3602 and P-3603 in the Coke Drum Processing and Closed Blowdown section of the SC/RC via a 2-inch line upstream of the make-up water control valve. These pumps may alternatively be supplied from the CWS main via a 1½-inch jumper line. Blowdown water exits the system via a 6-inch line from the No. 2 Calciner CWR header.

The use of chemical additives enhance cooling tower performance. Untreated cooling water causes problems with corrosion, scaling, fouling, pH, microbiological growth, and slime. Control of these conditions protects process equipment and maintains cooling tower efficiency.

Chemical and electrochemical reaction between exchanger alloy and heated water causes corrosion. For this reason a corrosion inhibitor is injected. Inhibitor flows from storage tank T-1501 to the suction of metering pumps P-1504 or spare P-1505. These pumps discharge directly into the basin to mix with cooling water. Corrosion is monitored with a coupon corrosion rack. A 1-inch line from the CWR main provides a constant flow of water through the rack into the basin. The rack contains coupons of metal alloys found in exchangers, and the coupons are checked periodically for indications of corrosion.

Scaling and fouling are related processes. Scaling occurs when dissolved salts are deposited on heat exchange surfaces. Fouling is the deposition of materials such as silt and suspended irons. In either case, heat transfer is impeded and cooling tower effectiveness deteriorates. To prevent scaling and fouling problems, a chemical dispersant is added. Stored in tank T-1502, dispersant is injected into the tower basin via metering pump P-1506.

Corrosion inhibitor and dispersant work together within an optimum pH range. pH may be better understood as the relative acidity of a substance. The optimum pH range for Y-4 cooling water is achieved through the introduction of 98% H_2SO_4 (sulfuric acid) from the Sulfur Processing Division. Incoming acid is directed into Y-4 via one of two line-ups. Acid can be sent to the elevated storage drum D-1503 and be gravity fed through the controller into the acid dilution trough in the settling basin. The acid flow can bypass D-1503 and be fed through the controller into the trough using line pressure from Sulfur Processing. Either line-up can be used, but fluctuations in line pressure from Sulfur Processing make gravity feed from D-1503 the more consistent mode of acid addition.

Microbiological growth and slime will hamper cooling tower efficiency by obstructing water flow through exchangers and equipment. The introduction of chlorine inhibits microbiological growth and slime. A 1½-inch line from the CWS main flows through EJ-1501 and draws chlorine from one of two 2000 lb. chlorine containers. This solution flows into the basin via the chlorine solution diffuser.

SC/RC Flare System

(See Figures 2.1, 2.2)

SC/RC flare drum D-1504 receives liquids and gases via two headers: a 30-inch warm flare line and a 12-inch cold flare line. The warm flare line carries a mixture of fluids from the No. 3 CTU and the various sections of the SC/RC Division to D-1504, while the cold flare line has the metallurgy to handle low temperature light ends (30° or less) that may be flared from portions of the Gas Recovery Plant (GRP). A two-phase flow of gas and liquid separates in D-1504 with liquid collecting in the boot and gases drawn off the top of the drum via a 30-inch line to the flare stack. The SC/RC Flare system can also handle some of the refinery flare load via the flare header from the No. 3 CTU Division knockout drum. This knockout drum can be lined up to accept flared material from the refinery when the south flare must be taken out of service. NOTE: The north flare cannot accept the entire refinery flare load; some units must be shut down.

It is critical to prevent liquid accumulation from building to the point where liquid enters the flare line to the flare stack. A high liquid level in D-1504 coupled with the opening of a relief valve in the flare system could force liquid (usually hydrocarbons) into the flare line and to the atmosphere via the flare stack. This liquid would ignite and fall to the ground, posing a fire hazard.

SAL 000005471

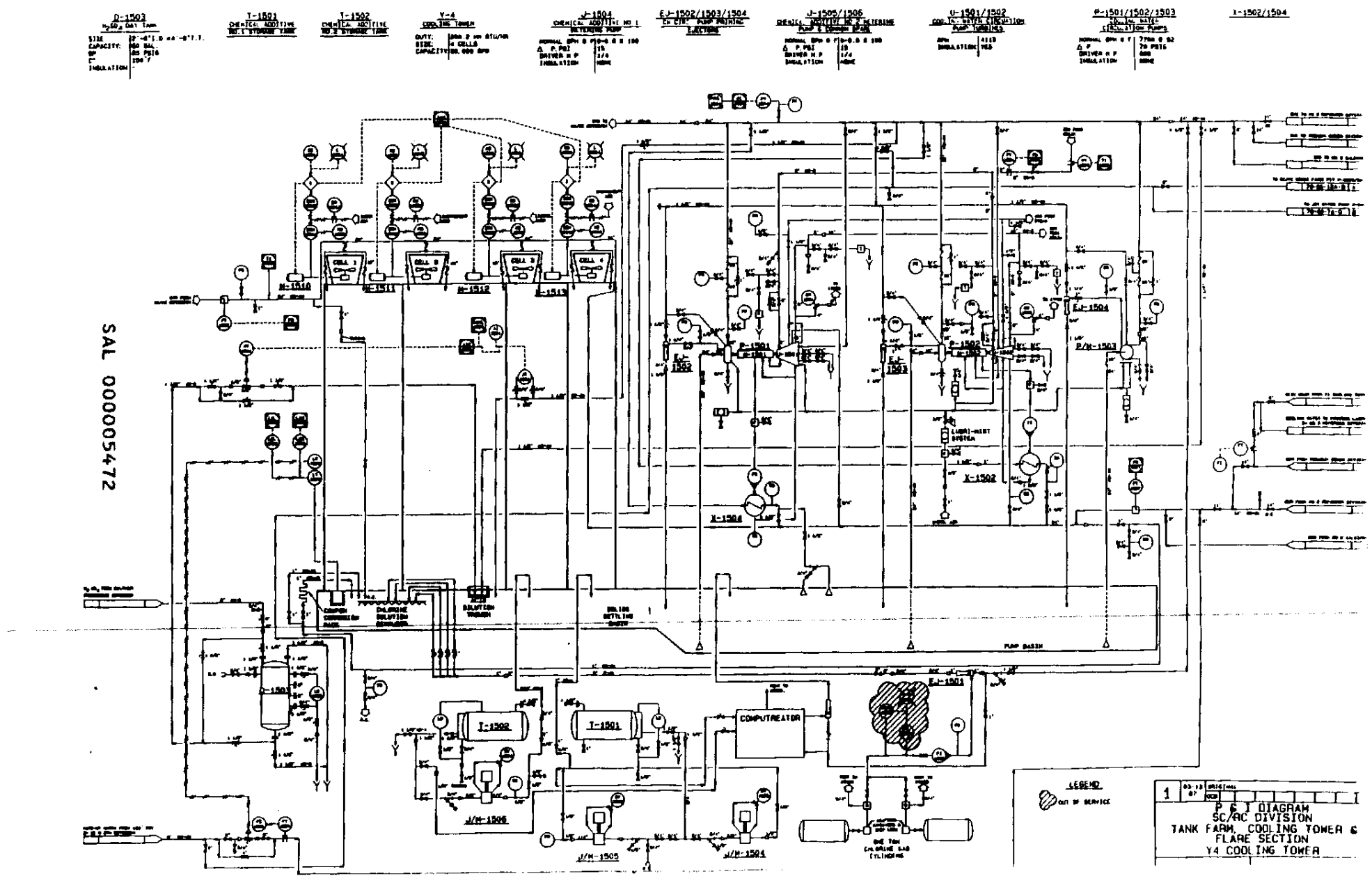

SAL 00000547 2

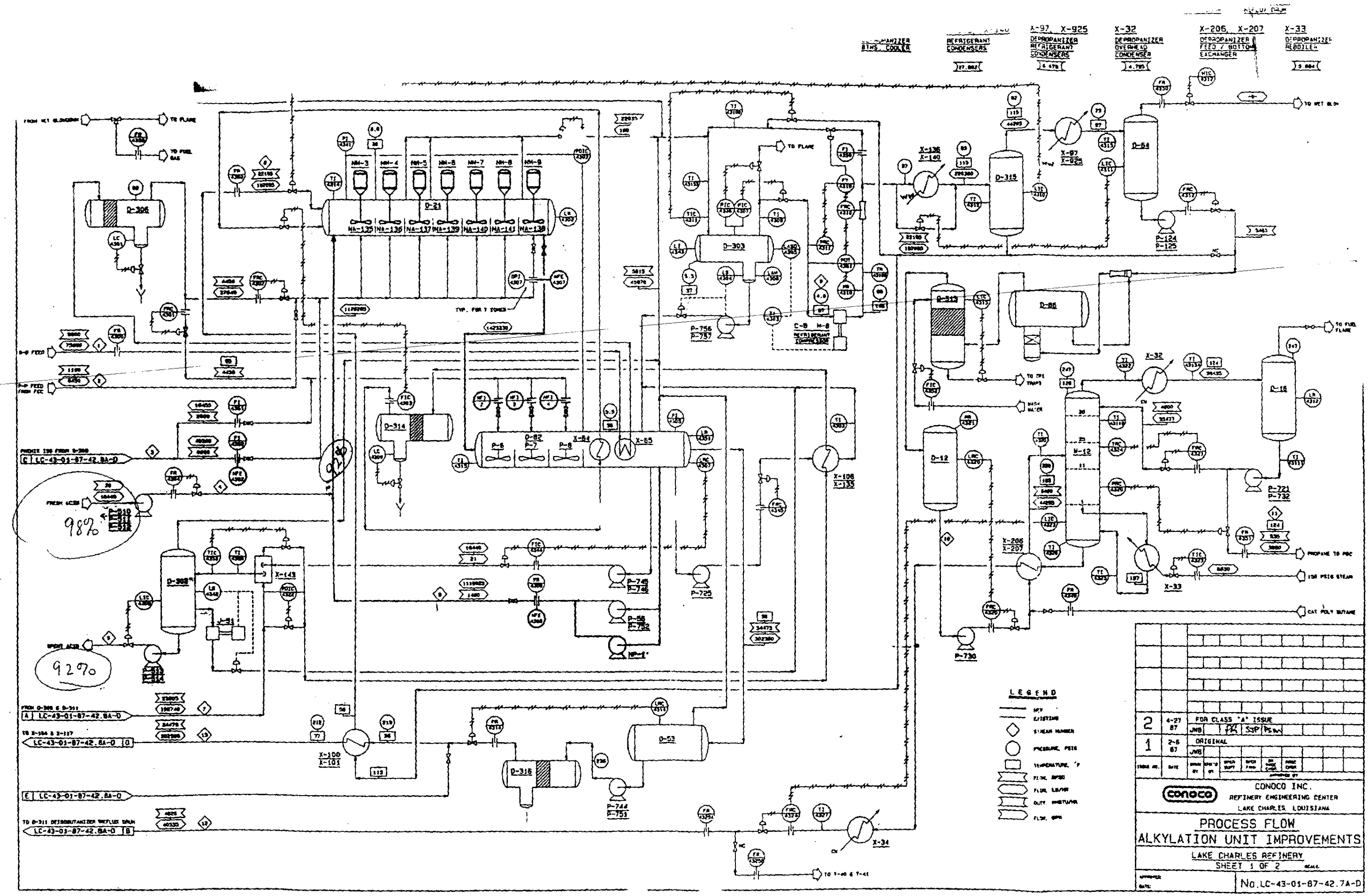

SAL 000005473

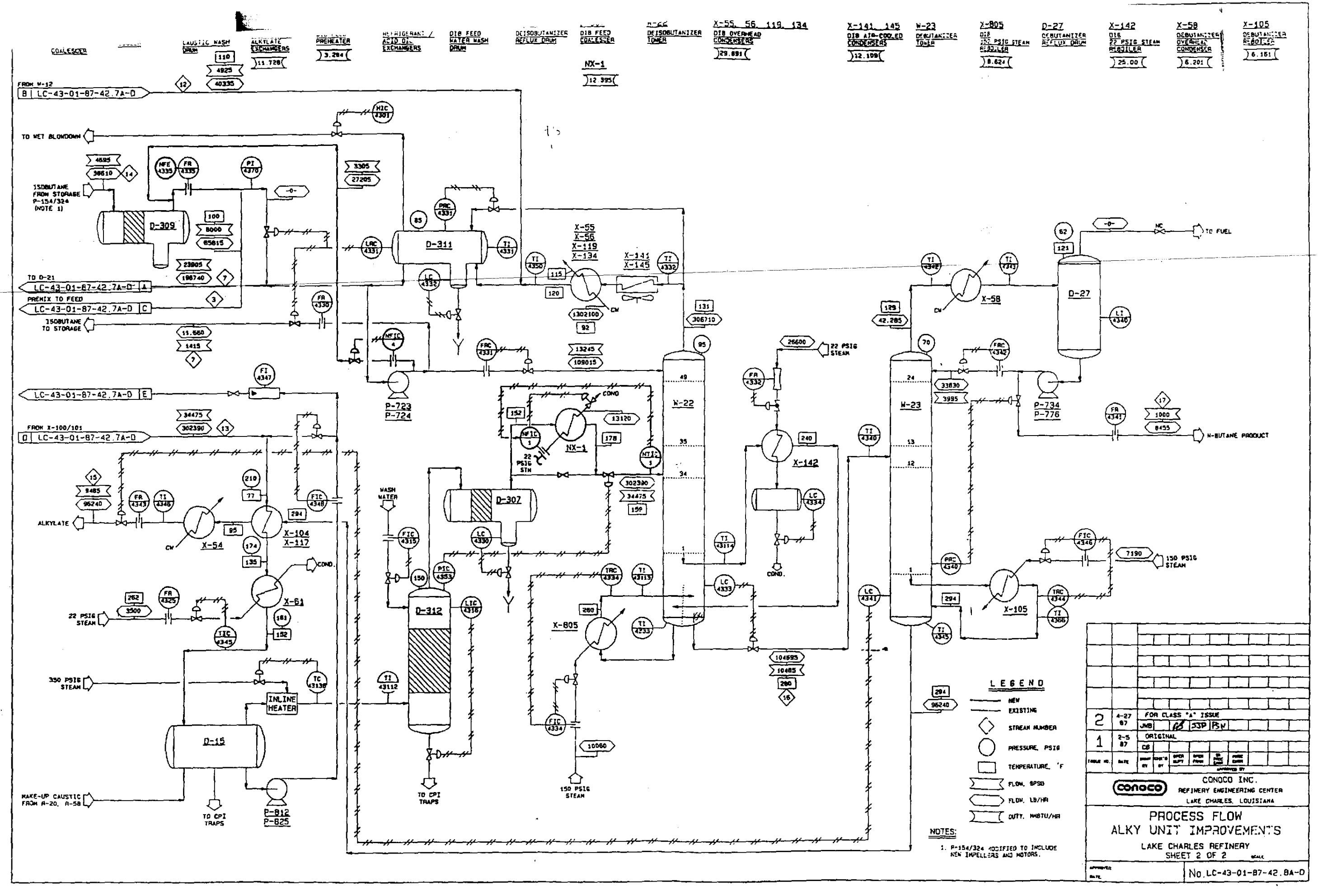

SAL 000005474

APPENDIX E

CHEMICAL COMPOSITION DATA

SAL 000005475

Conoco Inc
Calculation Sheet

Title

Job No.

Field

State

LAKE CHARLES REFINERY
LIQUID STREAM COMPOSITIONS
1987

Stream	Composition (wt %)										
	Benz	Tol.	EB	O-Xy	M-Xy	P-Xy	CHX	Naph (Biphen)	STY	CUM	PCUM
Reg Gasoline	1.4	7.9	1.7	2.3	4.0	1.7	<1	<1	1.0	1.0	2.0
UL Gasoline	1.7	7.9	1.7	2.3	4.0	1.7	<1	<1	1.0	1.0	2.0
SUL Gasoline	2.4	7.9	1.7	2.3	4.0	1.7	<1	<1	1.0	1.0	2.0
FCC Gasoline (Lt)	1.1	4.4	1.2	1.9	2.0	5.0	1.0	<1	1.0	1.0	1.0
FCC Gasoline (Hvy)	1.1	4.4	1.2	1.9	2.0	5.0	1.0	1.0 (1.0)	1.0	1.0	1.0
LSR Gasoline	3.9	3.0	<1	<1	<1	<1	5.2	<1	<1	<1	<1
Reformate	3.6	15.0	2.5	4.0	7.0	3.0	<1	<1	<1	1.0	1.0
Crude Wet Gas	0.2	<1	<1	<1	<1	<1	<1	<1	<1	<1	<1
Alkylate	<0.01	<1	<1	<1	<1	<1	<1	<1	<1	<1	<1
Naphtha	1.0	4.5	1.0	1.0	2.0	1.0	2.0	<1	<1	<1	<1
Crude	0.3	<1	<1	<1	<1	<1	<1	<1	<1	<1	<1
JP-4	0.3	1.5	<1	<1	1.4	<1	1.4	<1	<1	<1	<1
		—	—	—	—	—	—	—			
Coker Gas	0.3	4.0	<1	1.0	1.5	<1	1.0	<1	1.0	1.0	3.0
	<0.1	<1	<1	<1	<1	<1	<1	3.0	<1	<1	<1
No. 2 Distillate	<0.1	<1	<1	<1	<1	<1	<1	3.0	<1	<1	<1
Kerosene	<0.1	<1	<1	<1	<1	<1	<1	3.0	<1	<1	<1

Use LSR FOR ANY UNKNOWN GASOLINE STREAMS

SAL 000005476

Conoco Inc
Calculation Sheet

Job No

Title

Field

State

LIQUID STREAM COMPOSITIONS
1987 SARA 313 REPORT
LAKE CHARLES REFINERY

BENZENE

REGULAR GASOLINE - 1.4 wt% (PER TSL REPORT # I-32-85)

UNLEADED GASOLINE = 1.7 wt% (PER TSL REPORT # I-32-85 and M.W. CLAYTON IOC (6-19-86))

SUPER UL GASOLINE = 2.4 wt% (PER TSL REPORT # I-32-85 and M.W. CLAYTON IOC (6-19-86))

FCC GASOLINE (Lt & Hvy) = 1.1 wt%
LSR GASOLINE = 3.9 wt%
REFORMATE = 3.6 wt%
ALKYLATE = <0.01 wt%
NAPHTHA = 1.0 wt%
COKER GASOLINE = 0.3 wt%
(PER Tim MYERS IOC (1-7-88))

CRUDE WET GAS = 0.2 wt% (PER 1971 R&D Ponca City Stream SURVEY - # 305-0-2-71)

CRUDE = 0.3 wt% (PER TIM MYERS IOC (1-7-88))

JP-4 = 0.3 wt% (ESTIMATE BASED ON PONCA CITY DATA)

NO. 2 DISTILLATE, KEROSENE = <0.1 wt% (PER TSL (OLLIE ENGLE/BILL GEUBELLE) BASED ON BPT. RANGES)

SAL 000005477

NOTE: (1) REFER TO THE TABLE OF LIQUID STREAM COMPOSITIONS.
(2) DATA DIRECTLY FROM THE REFINERY WAS USED PREFERENTIALLY FOR BENZENE

Conoco Inc.
Calculation Sheet

Job No.

Field

State

TOLUENE

REGULAR, UNLEADED, SUPER UL GASOLINE = 7.9 wt % (MOBIL GASOLINE STUDY AVG. W/O HIGHEST)

FCC GASOLINE (Lt & Hvy) = 4.4 wt %
LSR GASOLINE = 3.0 wt %
REFORMATE = 15.0 wt %
NAPHTHA = 4.5 wt %
COKER GASOLINE = 4.0 wt %
(PER 1971 R&D Ponca City Stream Survey #305-0-2-71)

CRUDE WET GAS = ALKYLATE = CRUDE = No. 2 DISTILLATE = KEROSENE = <1% (OLLIE ENGLE, BILL GEUBELLE NIPER CRUDE ANALYSIS, R&D STREAM SURVEY)

JP-4 = 1.5 wt % (ESTIMATE BASED ON PONCA CITY DATA)

ETHYL BENZENE

REGULAR UNLEADED, SUPER UL GASOLINE = 1.7 wt % (MOBIL GASOLINE STUDY)

FCC GASOLINE (Lt & Hvy) = 1.2 wt % (R&D Stream Survey)

REFORMATE = 2.5 wt %
NAPHTHA = 1.0 wt %
(BILL GEUBELLE - 4-19-88 PHONE CONVERSATION)

ALKYLATE = CRUDE = No. 2 DISTILLATE = CRUDE WET GAS = KEROSENE = LSR GASOLINE = COKER GASOLINE = JP-4 = <1% (R&D Stream Survey, TSL - BASED ON BPTs)

O-XYLENE

REGULAR, UNLEADED, SUPER UL GASOLINE = 2.3 wt % (AVG MOBIL - HIGHEST AVG)

FCC GASOLINE (Lt & Hvy) = 1.9 wt % (1971 R&D Ponca City Stream Survey #305-0-2-71)

Conoco Inc.
Calculation Sheet

Job No **SAL 000005478**

Title

Field

State

REFORMATE = 4.0% (BILL GEUBELLE 4-19-88)

NAPHTHA = COKER GASOLINE = 1.0% (BILL GEUBELLE 4-19-88)

LSR GASOLINE = ALKYLATE = CRUDE = CRUDE OH = < 1 % (R&D Stream Survey, TSL - BPTS)
= KEROSENE = No. 2 DISTILLATE = JP-4

M-XYLENE

REGULAR, UNLEADED, SUPER UL GASOLINE = 0.7 (5.7) = 4.0 wt %
(AVG MOBIL - 2 HIGHEST Blending, RATIO TO REFORMATE COMP)

FCC GASOLINE (Lt & Hvy) = 2.0 wt % (BILL GEUBELLE 4-19-88)

REFORMATE = 7.0 wt %
NAPHTHA = 2.0 wt %
COKER GASOLINE = 1.5 wt %
(BILL GEUBELLE 4-19-88)

JP-4 = 1.4 wt % (ESTIMATE BASED ON PONCA CITY DATA)

ALKYLATE = CRUDE = KEROSENE = DIESEL = LSR = CRUDE OH = < 1 wt %
(BILL GEUBELLE, R&D SURVEY, CRUDE ANALYSIS)

P-XYLENE

REGULAR, UNLEADED, SUPER UL GASOLINE = 0.3 (5.7) = 1.7 wt %
(AVG MOBIL - 2 HIGHEST - M-Xy, RATIO TO REFORMATE COMP)

FCC GASOLINE (Lt & Hvy) = 5.0 wt %
REFORMATE = 3.0 wt %
NAPHTHA = 1.0 wt %
= COKER GASOLINE =
(BILL GEUBELLE, 4-19-88)

ALKYLATE = CRUDE = KEROSENE = DIESEL = LSR GASO = CRUDE OH = JP-4 = < 1 wt %
(BILL GEUBELLE, R&D SURVEY, CRUDE ANALYSIS)

SAL 000005479

Conoco Inc.
Calculation Sheet

Job No.

Field

State

Title

CYCLOHEXANE

REGULAR, UNLEADED, SUPER UL GASOLINE = <1% (MOBIL GASOLINE STUDY)

FCC GASOLINE (Lt & Hvy) = 1.0%
NAPHTHA = 2.0%
COKER GASOLINE = 1.0%
(BILL GEUBELLE, 4-19-88)

LSR GASOLINE = 5.2% (PER 1971 PONCA CITY R&D STREAM SURVEY)

REFORMATE = ALKYLATE = CRUDE = SLOP = DIESEL = KERO = CRUDE OH = <1%
(BILL GEUBELLE, R&D SURVEY, NIPER CRUDE ANALYSIS)

JP-4 = 0.7 × 2.0% = 1.4% (ESTIMATE BASED ON PONCA CITY DATA)

NAPHTHALENE (ALL PER OLLIE ENGLE & BILL GEUBELLE)

STYRENE, CUMENE, PSEUDO CUMENE (ALL PER BILL GEUBELLE, 5-2-88 PHONE CONVERSATION)

SAL 000005480

Conoco Inc.
Calculation Sheet

Job No

Title

Field

State

conoco

~~Em~~ 072

Interoffice Communication

To G. N. Constien - Denver

From S. D. Graybill, MT&E - Houston

Date July 11, 1986

Subject EPA LIMITS ON BENZENE IN REFORMATE - NOT A PROBLEM

As we discussed, the benzene concentration in reformate from Denver's new reformer should be much lower than EPA's 10 WT% maximum limitation, as required by NESHAP (National Emissions Standard for Hazardous Air Pollutants). Test run data from Ponca City's reformers indicates the benzene content in reformate ranges from 2-4 WT%. However, the actual benzene content of the Denver reformate will depend upon the feed quality, operating pressure, and octane severity of the operation.

Shown below are reformate benzene contents from the Ponca City No. 2 and No. 3 CRU's presented with respective RONC's and feed quality data. Increasing the light ends in the feed will generally increase the benzene content in the reformate. For example, cyclohexane converts mostly to benzene, boiling at 177°F.

	REFORMATE			FEED FRONT-END D-86 @ PC ELEVATION, F				FEED
	BENZENE WT%	RONC	API GRAV	IBP	5LV%	10LV%	20LV%	BENZENE WT%
Ponca City								
No. 2 CRU								
Dec/85	2.1	90.9	51.9	128	159	197	216	0.2
Aug/83	2.2	93.9	47.4	130	186	208	228	0.1
Dec/85	2.8	95.1	49.4	128	159	197	216	0.2
No. 3 CRU								
Dec/85	2.3	91.5	52.5	117	195	205	218	0.2
Feb/84	2.8	91.5	53.1	106	169	195	215	0.2
Feb/84	3.9	97.3	47.3	102	170	191	212	0.3
Dec/85	2.9	97.8	48.5	117	195	205	228	0.2
Feb/84	4.0	98.7	45.4	105	173	197	216	0.2

In addition to the above data, all of NAR's streams were well below NESHAP limitations at the time the standard was introduced, according to Phil Youngblood with Environmental Conservation. Moreover, Humber's heart-cut reforming operation at low pressure and high severity still maintains less than 10 WT% benzene in the C5+ reformate.

If you have any questions or comments, please contact me (ETN 3868) or Phil Youngblood (ETN 3677).

Steve Graybill
S. D. Graybill

Reference:
TBL I-5.84
B-83-86

SDG:ci
MT9/sdg6

cc: LTW, PLY, OA/File 2.52 - Houston
DJP - Denver
TGW, PCP, OFE - Ponca City

SAL 000005481

CONOCO

Interoffice Communication

To Mike Johnston

From M. W. Clayton

Date June 19, 1986

Subject Benzene Analysis of Gasoline Tanks - Lake Charles Refinery

JHR
WCR
DDS
RSJ
FILE

The benzene content of Refinery base gasoline tanks and finish product gasoline tanks was determined. All of the tanks were below the five percent maximum allowable concentration*. The tanks showing the highest levels of benzene were the reformate tanks and the super unleaded tanks which contain a high percentage of reformate.

4.9%

Tank	Sample Date	Gasoline Type	Benzene LV% ~~(Mole%)~~
38	6-11-86	Light St. Run	0.93
77	6-13-86	No. 2 Reformate	3.47
85	6-13-86	FCC Gasoline	0.94
98	6-13-86	Alkylate	0.10
99	6-12-86	Alkylate	0.10
33	6-11-86	No. 3 Reformate	4.14
78	6-13-86	Super Unleaded	1.79
64	5-27-86	Super Unleaded	3.18
65	6-09-86	Super Unleaded	1.49
80	6-13-86	Regular Leaded	1.86
25	6-01-86	Regular Leaded	1.65
32	5-29-86	Regular Leaded	2.36
92	6-08-86	Unleaded	1.87
93	6-13-86	Unleaded	0.29
31	6-05-86	Unleaded	2.12

4.5 → 7.9%

* Maximum allowable concentration for gasolines sales

M. W. Clayton
M. W. Clayton
Analytical Chemist

mr
cc: PFM/DLW RJH/PAN/RLM RHC KWC/JJM/JI/FILE
T. G. Waltrip - Ponca City

SAL 000005482

CONOCO INC.

PONCA CITY, OKLAHOMA

TECHNICAL SERVICES LABORATORY

Plt.: LC

File: 662.1
924

Date: 9-11-85

LABORATORY NO.: I-32-85

CHARGE: TSL

SUBJECT: Summary of Benzene Content of Finished Gasoline and In-Plant Streams - 1977 to 1985 - Lake Charles Refinery

CONCLUSION:

None of the Lake Charles Refinery finished gasolines or in-plant streams analyzed by this laboratory contain as much as 10.0 wt. % benzene. Therefore, the control provisions of EPA regulation 40 CFR 61, Subpart J, do not apply.

DISCUSSION:

A June 6, 1984, promulgated regulation from EPA mandates controls on benzene fugitive emissions at petroleum refineries. A key definition in the regulation is: "In benzene service means that a piece of equipment either contains or contacts a fluid that is at least 10 percent benzene by weight as determined according to the provisions of §61.245(d)." Unless fluids produced or used in the refinery contain at least 10 wt.% benzene, the controls in the regulation do not apply.

At P. L. Youngblood's request of 9-6-85, the results of previous laboratory studies of benzene in Lake Charles Refinery streams are summarized in this report. Five major studies on this topic were made from 1977 through 1985. Benzene content of all the streams measured in them was lower than 10 wt.%. Additional analyses have been done by the Lake Charles Refinery Laboratory.

Attachment II is a laboratory crosscheck comparing benzene concentrations determined using gas chromatography and infra-red analytical methods. The benzene results included in this report were obtained using both methods at different times. The method described in the regulation at §61.245(d) is gas chromatography.

ANALYTICAL DATA:

Attachment I.

REFERENCE:

1. Verbal request from P. L. Youngblood to R. S. Jones, dated 9-6-85.
2. Several laboratory reports dated in 1977, 1983, and 1985.

Approved:

Robert S. Jones

Senior Technologist

jd

cc: PWL-RMc-EW-PLY-RSJ-TGW-GM-F

Att: 2

SAL 000005483

ATTACHMENT I
BENZENE CONTENT OF LAKE CHARLES REFINERY
FINISHED GASOLINES AND IN-PLANT STREAMS

Stream Description	Sample Date	Benzene Wt.%
Finished Gasolines		
Regular Gasoline	8/83	1.8
Unleaded Gasoline	8/83	2.6
Super Unleaded Gasoline	8/83	2.8
Regular Gasoline	5/77	1.3
Premium Gasoline	5/77	1.2
Unleaded Gasoline	5/77	1.3
Unleaded Gasoline	3/77	1.8
Regular Gasoline	3/77	1.2
Premium Gasoline	3/77	1.3
In-Plant Streams		
Naphtha Cutterstock	5/85	0.7
Naphtha Cutterstock	4/85	0.7
Naphtha Cutterstock	4/85	0.4
Naphtha Cutterstock	4/85	0.5
Field PBC	1/85	1.3
Denuded Casinghead	1/85	2.4
No. 2 CTU LSR	1/85	3.9
No. 3 CTU LSR	1/85	2.8
W-10 OH	1/85	2.4
W-10 Btms	1/85	3.0
FCC Gasoline	8/83	0.8
No. 2 Lt. St. Run Gasoline	8/83	2.1
No. 3 Lt. St. Run Gasoline	8/83	4.4
Denuded Casinghead	8/83	2.0
Cat Poly Gasoline	8/83	0.1
Alkylate	8/83	0.1
Coker Gasoline	8/83	0.1
No. 2 Reformer Charge	8/83	1.2
No. 2 Reformate (95 RON)	8/83	4.3
No. 3 Reformate (101 RON)	8/83	6.6
No. 2 CTU Lt. Straight Run	11/77	2.2
No. 2 CTU Naphtha	11/77	0.2
Thermal Gasoline	11/77	3.8
Coker Gasoline	11/77	0.3
Coker Gasoline	5/77	0.2
Thermal Gasoline	5/77	0.4
TCC Gasoline	5/77	0.6
No. 1 Lt. Straight Run	5/77	2.3
No. 2 Lt. Straight Run	5/77	2.0
Denuded Casinghead	5/77	2.0
No. 1 Reformate	5/77	1.1
No. 2 Reformate	5/77	1.1
Primary Tower OH	5/77	3.4

→ NOTE: SHOULD ADD SOME RANGES IN FOR LC FUGITIVES USE DERIVED DATA. WILL HAVE TO CONVERT THESE CONCS. TO WT. % (SAME)

ETHYLENE, PROPYLENE & 1,3 BUTADIENE DATA

(PONCA CITY - USE LAKE CHAS DATA IF AVAILABLE)

STREAM	CONCENTRATION, MOL % ETHYLENE	PROPYLENE	1,3 BUTADIENE
FUEL GAS	6	3	<1
FCC TAIL GAS	10	<1	<1
P-B (FCC) (	<1	30	<1
P-P (FCC) (POLY)	<1	65	0.2
B-B (FCC	<1	7	0.3
CRYO-VRU TAIL GAS	10	<1	<1
RESID GAS ((RYO)	<1	0.1 & 3 (1)	<1
LIQ PROD ((RYO)	<1	5 & 45	<1
COKER WET GAS	1.8	7	<1
COMBINED POLY FEED (2)	<1	50	<1
PROPANE OVERHEAD (POLY)	<1	20	<1
POLY REACTOR EFF.	<1	10	<1
ALKY (CRYO) FEED	<1	5	<1
BB TO ALKY	<1	7	0.3
POLY OVERHEAD	<1	20	0.2
DEETH BTMS (POLY)	<1	20	<1
REFORMER TAIL GAS	7	2	<1
SWS OVERHEAD	9	27	<1

NOTE: DO SAME AS PREVIOUS EQPT FUGITIVES. ASSUME NO VOC EMISSIONS FROM HEATERS. ABOUT 98% FLARE EFFICIENCY (GET FLARED GAS FROM FUEL BALANCE). GET AVG. # VALVES & FLANGES FROM DENVER DATA. X NO. HTRS. PLUS FUEL GAS VALVES NOTED IN LC REPORT.

(1) #2 CRYO HAS LOWER CONCS THAN SOUTH PLANT UNIT.
(2) PP FROM FCC PLUS CRYO LIQUID

SAL 000005485

- CUMENE, PSEUDO CUMENE & STYRENE COMP. DATA MEMO

NAPHTHALENE AND BIPHENYL DATA

STREAM	COMPOSITION, WT % NAPHTHALENE	BIPHENYL
JET FUEL - (JET 50)	3	<1
No 2 DIESEL	3	<1
CRUDE CONDENSATE	1	<1
KEROSENE	3	<1
HEAVY FCC GASOLINE	1	1

CRUDE COMPOSITIONAL DATA

NOTE: USE THIS FOR PROCESS DRAINS

	WT %
BENZENE	0.36
CYCLOHEXANE	0.76
TOLUENE	0.79
ETHYL BENZENE	0.29
M-XYLENE	0.47
P-XYLENE	0.27
O-XYLENE	0.29
* CUMENE	0.17
* PSEUDO-CUMENE	0.12
NAPHTHALENE	0.01 +
STYRENE	0.05 +
BIPHENYL	NOT TESTED; NEGLIGIBLE

SAL 000005486

* THESE ARE FROM A CRUDE MIXTURE BUT SHOULD BE CLOSE. NO DATA ON NAPHTHALENE & BIPHENYL. MAY ASSUME SOMETHING LATER. MUST CHECK THESE WITH TSC.
+ FROM PC WASTE ANALYSIS FOR DENVER API SLOP OIL.

Dana Burke —
Ollie R.
4/12/88

APPENDIX B

Mobil Oil Corporation

ENVIRONMENTAL AFFAIRS
AND TOXICOLOGY DEPARTMENT

150 EAST 42ND STREET
NEW YORK, NEW YORK 10017

August 17, 1983

American Petroleum Institute
2101 L Street, N.W.
Washington, D.C. 20037

Attached are data which may be useful in the API package of information being prepared on gasoline as a potential source of human exposure to ethyltoluenes (ET) and trimethylbenzenes (TMB). The information comes from earlier Mobil investigations of the chemical components of gasoline both in the liquid and vapor states.

- Table 1. Chemical Composition of Commercial Unleaded Gasolines, shows the percent composition of 48 components in 12 commercial gasolines. The content of ET range from 2.50 to 5.29 (average 3.74) and individual TMB isomers range from 0.61 to 4.56 (average 1.80).

- Table 2, API-PS6 Gasoline and Vapor Sample Compositions, summarizes measurements of 74 components in an equilibrium air/gasoline mixture headspace when the liquid level approximated 20% of the total container volume (simulating refueling a car at the one fifth tank capacity level). Appendix A describes the procedure. No quantities of ET and TMB could be measured in the headspace at a detection limit of 30 ppm, even though calculated values might have indicated the presence of up to 96 ppm. The headspace conditions represent the maximum potential for exposure to gasoline vapors. In actual practice, people would be exposed to considerably lower concentrations as the headspace vapors mix with outside air.

  Substantiating the conclusion from the Table 2 data are results of air monitorings conducted at various gasoline handling locations. Ambient air samples were taken at an eastern Pennsylvania Mobil service station and analyzed for their gasoline vapor content. Additionally, numerous studies were made at refineries and terminals for the hydrocarbon content of air. These studies indicate the following:

Mobil

- No detectable quantities of ethyltoluenes or trimethylbenzenes were found in the eastern Pennsylvania service station air samples. The detection limit for these compounds is 0.2 mg/m^3 or 0.04 ppm (40 ppb).

- No measureable quantities of ethyltoluenes or trimethylbenzenes have been found in the hydrocarbon studies conducted at various Mobil facilities.

The results of these studies indicate a very low potential for human inhalation exposure to ET or TMB as a consequence of their presence as minor components of gasoline.

One interesting observation when reviewing the overall data on Table 1 is close agreement between the calculated values and the measured values. The calculated values are slightly higher than the measured values (482,490 vs. 460,000) because the calculation procedure recognizes all theoretical values in the vapor space.

TABLE 1

COMPOSITION'S OF TWELVE COMMERCIAL UNLEADED GASOLINES*

	A	B	C	D	E	F	G	H	I	J	K	L
C_3 & Lighter	0.13	0.17	0.04	1.33	0.09	0.03	0.03	0.03	0.00	0.02	0.02	0.05
n-Butane	2.97	1.66	4.50	4.95	3.02	3.11	3.71	5.12	3.02	3.95	3.11	4.01
i-Butane	1.22	0.60	0.70	0.07	2.10	0.73	0.58	0.51	0.96	0.92	0.43	0.64
Butenes	2.65	0.45	0.75	0.29	1.00	1.01	0.65	0.70	1.69	1.13	0.50	0.65
n-Pentane	3.10	1.71	2.35	1.65	3.16	1.60	3.17	2.26	3.05	1.12	4.72	3.45
i-Pentanes	6.25	20.80	9.58	8.03	6.54	9.70	7.83	5.18	7.63	7.54	10.08	8.36
Pentenes	5.01	1.23	5.65	3.33	2.70	3.72	3.69	3.00	5.83	4.90	2.61	2.83
Cyclopentane	0.15	0.09	0.20	0.12	0.33	0.17	0.33	0.27	0.31	0.14	0.36	0.36
Methylcyclopentane	1.09	0.51	1.11	0.64	1.70	1.12	1.40	0.87	1.37	1.39	1.05	1.61
n-Hexane	2.45	1.23	0.88	0.47	2.33	0.50	1.56	0.95	1.64	0.85	1.51	2.23
i-Hexanes	7.18	3.93	6.90	4.46	6.04	4.83	6.23	4.16	6.42	7.04	5.67	6.66
Hexenes	3.96	0.96	4.46	2.37	2.67	3.43	4.39	6.60	4.54	3.77	3.35	2.79
Cyclohexane	0.12	0.04	0.09	0.05	0.59	0.09	0.23	0.14	0.15	0.09	0.19	0.41
Methylcyclohexane	0.41	0.36	0.44	0.17	0.94	0.28	0.58	0.43	0.49	0.54	0.40	0.61
n-Heptane	1.20	0.80	0.44	0.40	1.40	0.25	0.76	0.62	0.92	0.54	0.63	1.17
i-Heptanes	4.73	3.32	4.28	5.02	5.02	2.64	5.24	3.26	4.38	4.81	3.91	5.08
Heptenes	2.36	0.73	2.33	0.87	3.21	1.58	2.01	1.62	2.21	1.94	1.88	1.38
diMethylcyclopentanes	0.57	0.43	0.52	0.48	1.10	0.62	0.98	0.68	1.00	1.14	0.68	1.01
n-Octane	0.48	0.55	0.42	0.48	1.20	0.16	0.45	0.55	0.58	0.31	0.38	0.58
i-Octanes	2.64	6.05	18.99	23.04	3.30	1.28	9.97	8.66	8.27	14.04	10.80	7.23
Octenes	2.55	0.28	2.54	1.47	1.98	1.88	1.98	1.34	0.67	2.08	2.96	2.06
C_8-Naphthenes (N_5 & N_6)	0.87	0.89	0.55	0.32	1.20	1.19	0.71	0.74	0.99	1.16	0.54	0.89
n-Nonane	0.26	0.22	0.25	0.24	0.21	0.17	0.33	0.28	0.30	0.22	0.19	0.30
i-Nonanes	0.94	0.79	3.34	2.99	1.03	2.08	1.61	1.58	2.48	2.08	1.50	1.67
Nonenes	0.80	0.72	0.56	0.63	1.53	0.36	1.28	1.10	0.88	1.13	0.89	0.81
C_9-Naphthenes (N_5 & N_6)	0.46	0.27	0.86	0.60	0.75	0.57	0.76	0.45	0.75	0.72	0.65	0.76
n-Decane	0.00	0.00	0.00	0.00	0.00	0.00	0.00	0.00	0.00	0.00	0.00	0.00
C_{10}– i-Paraffins, Olefins, Naphthenes	2.52	1.17	3.81	2.97	3.34	2.16	3.32	2.94	2.87	4.52	2.68	3.00
Benzene	2.24	1.09	0.63	0.45	1.62	2.21	1.78	1.22	1.06	1.05	1.94	1.56
Toluene	7.50	14.86	2.51	6.10	10.78	17.78	6.13	13.21	4.76	4.05	7.43	9.77
Ethylbenzene	2.11	2.84	0.84	1.70	1.72	1.63	1.71	3.11	2.05	1.30	1.07	1.95
m-,p-Xylenes	7.84	9.81	4.22	8.48	6.40	5.71	5.19	7.52	6.97	5.78	3.65	6.67
o-Xylenes	3.48	3.76	1.64	2.96	2.50	2.29	2.26	2.63	2.64	2.16	1.90	2.25
1,2,3-Trimethylbenzene	1.02	1.00	0.61	0.73	0.95	0.90	1.00	0.98	0.95	0.79	1.26	0.95
1,2,4-Trimethylbenzene	3.87	3.89	2.22	3.07	3.45	3.25	3.16	2.97	3.24	2.93	4.56	3.10
1,3,5-Trimethylbenzene	1.37	1.34	0.82	1.10	1.27	1.07	1.02	1.02	1.17	1.10	1.54	1.04
Methylethylbenzenes	6.53	4.37	2.50	2.87	3.61	3.62	3.55	4.01	4.27	3.02	5.29	3.25
Propylbenzenes	0.64	0.71	0.30	0.44	0.63	0.74	0.70	0.81	0.76	0.44	0.91	0.58
Butylbenzenes	0.08	0.08	0.05	0.05	0.09	0.08	0.44	0.28	0.11	0.10	0.27	0.23
Methylpropylbenzenes	1.23	1.02	0.55	0.63	0.41	0.94	0.96	1.68	1.02	0.99	1.10	1.13
di-Ethylbenzenes	0.11	0.94	0.53	0.55	0.91	1.06	0.99	0.90	1.30	0.65	1.17	0.83
1,2,4,5-Tetramethylbenzene	0.35	0.28	0.27	0.25	0.39	0.26	0.34	0.24	0.23	0.31	0.25	0.31
1,2,3,5-Tetramethylbenzene	0.57	0.43	0.32	0.29	0.63	0.39	0.53	0.40	0.35	0.50	0.39	0.51
1,2,3,4-Tetramethylbenzene	0.17	0.12	0.11	0.09	0.22	0.12	0.19	0.24	0.08	0.15	0.13	0.17
Other C_{10} Alkylbenzenes	1.74	1.55	0.98	1.00	1.80	1.82	1.81	1.96	1.36	1.48	2.11	1.83
C_{11} Alkylbenzenes	2.71	1.43	2.21	1.33	3.61	1.36	3.42	2.68	1.93	3.77	2.68	2.86
Naphthalene	0.50	0.36	0.27	0.24	0.64	0.33	0.45	0.40	0.17	0.47	0.37	0.00
Methylnaphthalenes	0.12	0.31	0.34	0.22	0.69	0.10	0.49	0.28	0.00	0.87	0.47	0.38

*Sampled in southern New Jersey in summer, 1980. The analyses were carried out by gas chromatography and are shown in weight percent.

SAL 000005489

Table 2.

API-PS6 GASOLINE AND VAPOR SAMPLE COMPOSITIONS

	COMPONENT	HYDROCARBONS, 100 WT% BASIS			HC IN HC+AIR SAMPLE	
		LIQUID MEAS.	VAPOR MEAS.	VAPOR CALC.	PPM VOL MEAS.	PPM VOL CALC.
1	UNKNOWNS (HC AROMATICS)	0.04	0.00	0.00	0	0
2	PROPENE	0.01	0.20	0.18	1440	1408
3	PROPANE	0.05	1.44	1.25	9896	9136
4	I-BUTANE	0.90	10.50	8.97	54740	49937
5	1-BUTENE+2-METHYLPROPENE	0.13	1.25	1.13	6749	6524
6	N-BUTANE	3.97	30.40	28.23	158486	157117
7	TRANS-2-BUTENE	0.27	1.96	1.81	10583	10441
8	CIS-2-BUTENE	0.23	1.56	1.45	8623	8362
9	3-METHYL-1-BUTENE	0.07	0.27	0.26	1166	1190
10	I-PENTANE	8.69	25.10	24.65	105411	110512
11	1-PENTENE	0.23	0.58	0.60	2505	2777
12	2-METHYL-1-BUTENE	0.49	1.18	1.25	5097	5757
13	N-PENTANE	3.60	7.10	7.68	29818	34421
14	TRANS-2-PENTENE	0.64	1.27	1.36	5486	6274
15	CIS-2-PENTENE	0.36	0.68	0.74	2670	3083
16	2-METHYL-2-BUTENE	1.01	1.77	2.00	7646	9201
17	C5-DIOLEFINS (DIENES)	0.00	0.00	0.00	0	23
18	2,2-DIMETHYLBUTANE	0.22	0.31	0.29	1087	1073
19	CYCLOPENTANE	0.29	0.32	0.39	1382	1810
20	2,3-DIMETHYLBUTANE	1.82	1.49	1.80	5239	6739
21	2-METHYLPENTANE	3.91	2.88	3.49	10126	13085
22	3-METHYLPENTANE	2.49	1.57	2.00	5520	7513
23	HEXENES	2.26	1.21	1.82	4356	6988
24	N-HEXANE	1.69	0.79	1.11	2778	4153
25	2,4-DIMETHYLPENTANE	0.97	0.27	0.41	816	1320
26	METHYLCYCLOPENTANE	1.24	0.51	0.73	1836	2805
27	3,3-DIMETHYLPENTANE	0.11	0.03	0.04	91	125
28	CYCLOHEXANE	0.12	0.03	0.04	108	166
29	2-METHYLHEXANE	1.47	0.24	0.43	724	1377
30	2,3-DIMETHYLPENTANE	0.86	0.15	0.36	453	1165
31	3-METHYLHEXANE	1.50	0.23	0.40	694	1299
32	1-CIS-3-DIMETHYL-N5	0.32	0.05	0.09	157	289
33	1-TRANS-3-DIMETHYL-N5	0.31	0.04	0.09	126	292
34	1-TRANS-2-DIMETHYL-N5	0.31	0.04	0.08	126	281
35	3-ETHYL-PENTANE	0.09	0.01	0.01	30	30
36	N-HEPTANE	0.57	0.06	0.12	181	382
37	C7-OLEFINS	0.78	0.10	0.33	309	1076
38	METHYLCYCLOHEXANE	1.38	0.10	0.26	308	871
39	MONOMETHYL-ISO-C8-P	5.24	0.48	0.48	1271	1369
40	OTHER ISO-C8-P	10.06	0.76	1.35	2012	3828
41	C8-OLEFINS	0.05	0.48	0.01	1294	17
[illegible]	C8-NAPHTHENES (N5+N6)	2.61	0.12	0.14	323	395
	N-OCTANE	0.23	0.00	0.02	0	43

APPENDIX A

API-PS6 GASOLINE AND VAPOR SAMPLE COMPOSITIONS

To help define the composition of gasoline vapors to which people might be exposed, auto gas tank refueling conditions were simulated in the laboratory. An apparatus was constructed which allowed controlled filling/emptying (with agitation) and subsequent sampling of the equilibrium air/hydrocarbon mixture headspace when the liquid level closely approximated 20% of the total container volume (simulating a refueling at the one-fifth tank capacity level). Temperature for the test was 79°F and the gasoline used was API PS-6.

The resulting data are attached in Table 2 for both measured and calculated values. The first data column is a chromatographic analysis of the API PS-6 gasoline charged to the simulated gas tank. The second column shows a chromatographic analysis of the headspace vapors on a 100 wt. % hydrocarbon basis. As would be expected, the predominate hydrocarbons are those of lower molecular weights. The third column is a calculated hydrocarbon composition (100 wt. % basis) for the headspace, using methods, slightly modified, described in SAE Paper 690506, "Mathematical Models for Prediction of Fuel Tank and Carburetor Evaporation Losses" by W. J. Koehl, Jr. As indicated, agreement is very close between the measured and the calculated vapor space hydrocarbon compositions.

Both the measured and calculated vapor space hydrocarbon compositions were then converted to parts-per-million volume of the hydrocarbon plus air mixture without round-off of values. The measured values shown in the fourth column are based on the 46 mole % hydrocarbons/54 mole % air mixture in the vapor space as determined by the chromatograph or (and confirmed by mass spectrometer analysis). The calculated ppm volume values for hydrocarbons in the mixture are listed in the fifth column. These are slightly higher than the measured ppm volume values (482,490 vs. 460,000) because the calculation procedure recognizes all theoretical hydrocarbons in the vapor space, and includes several not detected by the actual chromatograph analysis. Overall, however, the calculated and measured values are in very reasonable agreement.

Appendix C
ET & TMB Charcoal Tube Readings for Service Station Employees

Station A		Station B		Station C	
ET	TMB	ET	TMB	ET	TMB
<0.05	<0.05	0.14	0.11	<0.04	<0.04
<0.05	<0.05	<0.04	<0.04	<0.04	<0.04
<0.05	<0.05	0.03	0.03	<0.04	<0.04
<0.05	<0.05	0.04	0.04	<0.05	<0.05
<0.04	<0.04	0.03	0.03	<0.04	<0.04
<0.05	<0.05	<0.05	<0.05	<0.05	<0.05
<0.04	<0.04	<0.04	<0.04	<0.05	<0.05
<0.05	<0.05	0.03	0.03	<0.04	<0.04
<0.05	<0.05	<0.03	<0.03	<0.04	<0.04
		<0.03	0.03	<0.04	<0.04

Source: This study was conducted under contract for API by UBTL Div., University of Utah Research Institute.

Table II. Individual Hydrocarbons in a Typical Gasoline (GC Data from General Motors Research Lab)

Component	Vol.	Density,[a] g/ml	Ratio,[a] carbons counted / carbons present
Aromatics			
Benzene	1.5	0.8845	1.000
Toluene	5.9	0.8719	0.857
Ethyl benzene	1.3	0.8717	0.750
Xylene	5.9	0.8730	0.750
1-Methyl-3-ethyl benzene + 1-methyl-4-ethyl benzene	1.5	0.8673	0.666
tert-Butyl benzene + 1,2,4-tri methyl benzene (pseudocumene)	1.7	0.8756	0.583
Weighted average density = 0.8732 g/ml. Weighted ratio, carbons counted/carbons present = 0.7835.			
Paraffins			
n-Butane	7.0	0.5844	1.000
Isopentane	9.3	0.6248	1.000
n-Pentane	4.6	0.6312	1.000
2,3-Dimethylbutane	1.4	0.6664	1.000
2-Methyl pentane	3.8	0.6579	1.000
3-Methyl pentane	2.4	0.6690	1.000
n-Hexane	3.3	0.6640	1.000
Methyl cyclopentane + 2,2-dimethyl pentane	1.6	0.7159	0.928
2,4-Dimethyl pentane + 2,2,3-trimethyl butane	1.4	0.6858	0.928
2,3-Dimethyl pentane + 2-methyl hexane	3.9	0.6912	1.000
3-Methyl hexane + unknown	2.4	0.6915	1.000
3-Ethyl pentane + 2,2,4-trimethyl pentane	4.9	0.6994	0.937
n-Heptane	2.0	0.6882	1.000
Methyl cyclohexane + 2,2-dimethyl hexane	1.0	0.7368	0.937
2,2,3-Trimethyl pentane + 2,5-dimethyl hexane + 2,4-dimethyl hexane	1.9	0.7076	0.958
3,3-Dimethyl hexane + 2,3,4-trimethyl pentane + 2,3,3-trimethyl pentane + 2,3-dimethyl hexane	3.6	0.7211	0.937
3-Methyl heptane	1.1	0.7101	1.000
Weighted average density = 0.6612 g/ml. Weighted ratio, carbons counted/carbons present = 0.9831.			
Olefins			
2-Methyl-1-butene	0.6	0.6557	0.400
trans-2-Pentene	0.8	0.6533	0.400
2-Methyl-2 butene	1.7	0.6676	0.200
2-Methyl-1-pentene + 1-hexene	0.5	0.6814	0.416
2-Methyl-2-pentene	1.0	0.6913	0.166
4,4-Dimethyl-1-pentene	0.6	0.6871	0.428
2-Methyl-1-hexene 1-heptene + 2-ethyl-1-pentene	0.9	0.7092	0.333
3-Methyl-*trans*-2-hexene + 2-methyl-2-hexane + *trans*-3-heptene + *cis*-3-heptene	1.0	0.7053	0.214
Weighted average density = 0.6808 g/ml. Weighted ratio, carbons counted/carbons present = 0.2917.			

[a] In instances where two or more components appear unresolved in the GC chromatogram, they are assumed to be present in equal amounts, and the average densities and average ratio values are used.

SAL 000005493

NIPER
NATIONAL INSTITUTE FOR PETROLEUM AND ENERGY RESEARCH
Post Office Box 2128
Bartlesville, Oklahoma 74005
(918) 336-2400

SINCE 1936

April 25, 1988

Ms. Dana Burke
CONOCO
P. O. Box 1267
Ponca City, OK 74603

Reference: Your phone call of April 22, 1988

Dear Dana:

I have enclosed two PIANO analyses from our Siemens gas chromatograph. One is the analysis of a blend of sweet crude oils, and the other is the analysis of a 250-375°F boiling range distillate of the same crude. We have this file set up to eliminate the olefin category from the printout because the samples are crude oil. Olefins would also be printed for analysis of petroleum products such as gasolines.

We can provide this type analyses on your samples for $150 per sample.

I trust this information will be useful to you. Call me at (918) 337-4256, if I may be of further assistance.

Sincerely,

Paul W. Woodward

Paul W. Woodward
Senior Chemist
Fuel Chemistry Research

Enclosures

SAL 000005494

Crude oil

S. P. R. P. N. A.

Sample ID: ... '08-15CR 83 Peaks from File: J3087H2a
run on: 3 Nov 1987 @ 11:13 Spl.Wt.: 6.5036 / Std.Wt.: .1355

		Normalized Wt.%	Normalized Vol.%	in Sample Wt.%	in Sample Vol.%
Total Paraffins =		34.289	37.496	7.436	8.132
Total Iso-paraffins =		25.098	26.457	5.443	5.738
Total Naphthenes =		29.289	26.864	6.352	5.826
Total Aromatics =		11.323	9.183	2.456	1.991
Total Unknowns =		-0.000	-0.000	0.000	0.000
Paraffins:	C1	0.000	0.000	0.000	0.000
	C2	.038	.075	.008	.016
	C3	2.070	2.891	.449	.627
	C4	5.104	6.190	1.107	1.342
	C5	6.528	7.328	1.416	1.589
	C6	5.629	6.007	1.221	1.303
	C7	5.281	5.436	1.145	1.179
	C8	5.197	5.208	1.127	1.129
	C9	4.443	4.362	.963	.946
	C10	0.000	0.000	0.000	0.000
	C11	0.000	0.000	0.000	0.000
	C12	0.000	0.000	0.000	0.000
Iso-paraffins:	C4	1.748	2.200	.379	.477
	C5	4.002	4.541	.868	.985
	C6	4.909	5.254	1.065	1.139
	C7	4.668	4.799	1.012	1.041
	C8	4.635	4.636	1.005	1.005
	C9	5.136	5.026	1.114	1.090
	C10	0.000	0.000	0.000	0.000
	C11	0.000	0.000	0.000	0.000
Naphthenes:	C5	.862	.814	.187	.176
	C6	6.828	6.294	1.481	1.365
	C7	10.291	9.451	2.232	2.050
	C8	9.435	8.628	2.046	1.871
	C9	1.874	1.678	.406	.364
	C10	0.000	0.000	0.000	0.000
	C11	0.000	0.000	0.000	0.000
	C12	0.000	0.000	0.000	0.000
Aromatics:	C6	1.658	1.328	.360	.288
	C7	3.619	2.941	.785	.638
	C8	6.047	4.913	1.311	1.065
	C9	0.000	0.000	0.000	0.000
	C10	0.000	0.000	0.000	0.000
	C11	0.000	0.000	0.000	0.000
	C12	0.000	0.000	0.000	0.000

This run was terminated after n-C_9, but could be run to n-C_{12}.

SAL 000005495

S. P. R. P. N. A.

The Detailed Analysis of Petroleum Hydrocarbon
Samples by Capillary Gas Chromatography

Components Listed in Chromatographic Order

Sample ID: 08-15CR 83 Peaks from File: J3087H2a
run on: 3 Nov 1987 @ 11:13 Spl.Wt.: 6.5036 / Std.Wt.: .1355

COMPONENT	NORMALIZED Wt. %	NORMALIZED Vol. %	in Sample Wt. %	in Sample Vol. %
Ethane	.038	.075	.008	.016
Propane	2.070	2.891	.449	.627
i-Butane	1.748	2.200	.379	.477
n-Butane	5.104	6.190	1.107	1.342
i-Pentane	4.002	4.541	.868	.985
n-Pentane	6.528	7.328	1.416	1.589
Cyclopentane	.862	.814	.187	.176
2-Methylpentane	3.045	3.279	.660	.711
3-Methylpentane	1.864	1.975	.404	.428
n-Hexane	5.629	6.007	1.221	1.303
2,2-Dimethylpentane	.079	.082	.017	.018
Methylcyclopentane	3.307	3.109	.717	.674
2,4-Dimethylpentane	.207	.216	.045	.047
Benzene	1.658	1.328	.360	.288
3,3-Dimethylpentane	.057	.058	.012	.013
Cyclohexane	3.521	3.185	.764	.691
2-Methylhexane	1.587	1.647	.344	.357
2,3-Dimethylpentane	.634	.642	.137	.139
1,1-Dimethylcyclopentane	.356	.332	.077	.072
3-Methylhexane	1.959	2.007	.425	.435
1t,3-Dimethylcyclopentane	.774	.732	.168	.159
1c,3-Dimethylcyclopentane	.683	.642	.148	.139
3-Ethylpentane	.145	.147	.032	.032
1t,2-Dimethylcyclopentane	1.216	1.108	.264	.240
n-Heptane	5.281	5.436	1.145	1.179
Methylcyclohexane	6.676	6.098	1.448	1.332
1,1,3-Trimethylcyclopentane	.414	.404	.090	.088
Ethylcyclopentane	.585	.538	.127	.117
2,5-Dimethylhexane	.222	.222	.048	.048
2,2,3-Trimethylpentane	.299	.293	.065	.064
1c,2t,4c-Trimethylcyclopentan	.386	.364	.084	.079
1c,2t,3c-Trimethylcyclopentan	.517	.483	.112	.105
2,3,4-Trimethylpentane	.085	.083	.018	.019
Toluene	3.619	2.941	.785	.638
2,3-Dimethylhexane	.528	.522	.115	.113
2-Methylheptane	1.931	1.948	.419	.423
4-Methylheptane	.462	.462	.100	.100
1c,2c,4t-Trimethylcyclopentan	.060	.055	.013	.012
3-Methylheptane	1.108	1.106	.240	.240
1c,2t,3-Trimethylcyclopentane	1.769	1.618	.384	.351
1,4-Dimethylcyclohexane	.641	.592	.139	.128
1,1-Dimethylcyclohexane	.215	.194	.047	.042
3c-Ethylmethylcyclopentane	.230	.209	.050	.045
3t-Ethylmethylcyclopentane	.208	.189	.045	.041
2t-Ethylmethylcyclopentane	.632	.574	.137	.125
1,1-Ethylmethylcyclopentane	.074	.068	.016	.015
1t,2-Dimethylcyclohexane	.847	.769	.184	.167
n-Octane	5.197	5.208	1.127	1.129
i-Propylcyclopentane	.085	.077	.018	.017
2,3,4-Trimethylhexane	.037	.036	.008	.008
N2	.075	.069	.016	.015
2,2-Dimethylheptane	.052	.051	.011	.011

SAL 000005496

2,5-Dimethylheptane	.432	.417	.094	.090
n-Propylcyclopentane	2.145	1.947	.465	.422
2,4-Dimethylheptane	.794	.782	.172	.170
Ethylcyclohexane	.844	.755	.183	.164
2,6-Dimethylheptane	.400	.397	.087	.086
2,3-Dimethylheptane	.051	.049	.011	.011
N5	.135	.121	.029	.026
N6	.076	.068	.016	.015
N7	.083	.074	.018	.016
Ethylbenzene	1.341	1.090	.291	.236
2,5-Dimethylheptane	.350	.340	.076	.074
P3	.034	.033	.007	.007
m-Xylene	2.147	1.754	.466	.380
p-Xylene	1.232	1.007	.267	.218
P4	.296	.285	.064	.062
P5	.073	.070	.016	.015
4-Methyloctane	.588	.578	.128	.125
2-Methyloctane	.796	.783	.173	.170
1c,2t,4t-Trimethylcyclohexane	.097	.087	.021	.019
3-Ethylheptane	.244	.236	.053	.051
3-Methyloctane	.933	.913	.202	.198
o-Xylene	1.327	1.063	.288	.230
N11	.417	.373	.090	.081
N12	.728	.652	.158	.141
N13	.459	.411	.099	.089
P7	.057	.055	.012	.012
1-Butylcyclopentane	.096	.086	.021	.019
N14	.048	.043	.010	.009
N15	.029	.026	.006	.006
n-Nonane	4.443	4.362	.963	.946

This fraction is
12.3 wt % of
crude.
BP = 250-375°F

S. P. R. P. N. A.

Sample ID: 08-15CUT3 — 209 Peaks from File: J3087H8b
run on: 4 Nov 198 @ 02:3 — Spl.Wt.: 7.2634 / Std.Wt.: .1352

		Normalized Wt.%	Normalized Vol.%	in Sample Wt.%	in Sample Vol.%
Total Paraffins =		23.831	25.809	21.937	25.758
Total Iso-paraffins =		20.092	21.475	18.496	19.769
Total Naphthenes =		23.686	23.501	21.804	21.634
Total Aromatics =		28.363	25.396	26.110	25.379
Total Unknowns =		4.029	3.819	3.658	3.467
Paraffins:	C1	0.000	0.000	0.000	0.000
	C2	0.000	0.000	0.000	0.000
	C3	0.000	0.000	0.000	0.000
	C4	0.000	0.000	0.000	0.000
	C5	.009	.011	.008	.010
	C6	.022	.027	.021	.024
	C7	.398	.453	.366	.417
	C8	5.426	6.017	4.995	5.539
	C9	8.118	8.819	7.473	8.118
	C10	6.858	7.323	6.313	6.741
	C11	2.838	2.990	2.612	2.753
	C12	.163	.169	.150	.156
Iso-paraffins:	C4	0.000	0.000	0.000	0.000
	C5	.007	.009	.006	.008
	C6	.015	.018	.014	.017
	C7	.137	.156	.127	.144
	C8	2.385	2.642	2.196	2.432
	C9	8.554	9.253	7.875	8.517
	C10	7.883	8.227	7.256	7.573
	C11	1.110	1.170	1.022	1.077
Naphthenes:	C5	0.000	0.000	0.000	0.000
	C6	.092	.093	.084	.085
	C7	1.514	1.533	1.394	1.411
	C8	9.883	9.934	9.098	9.145
	C9	6.523	6.403	6.005	5.895
	C10	5.585	5.452	5.142	5.019
	C11	.046	.045	.042	.041
	C12	.042	.042	.039	.038
Aromatics:	C6	.026	.023	.024	.021
	C7	1.195	1.075	1.100	.989
	C8	10.111	9.086	9.307	8.364
	C9	9.155	8.218	8.427	7.565
	C10	6.362	5.663	5.857	5.213
	C11	1.480	1.302	1.362	1.198
	C12	.034	.030	.032	.028

SAL 000005498

S. P. R. P. N. A.

The Detailed Analysis of Petroleum Hydrocarbon
Samples by Capillary Gas Chromatography

Components Listed in Chromatographic Order

Sample ID: 08-15CUT3 209 Peaks from File: J3087H8b
run on: 4 Nov 198 @ 02:3 Spl.Wt.: 7.2634 / Std.Wt.: .1352

COMPONENT	NORMALIZED Wt. %	NORMALIZED Vol. %	in Sample Wt. %	in Sample Vol. %
i-Pentane	.007	.009	.006	.008
n-Pentane	.009	.011	.008	.010
2-Methylpentane	.009	.011	.008	.010
3-Methylpentane	.006	.007	.006	.007
n-Hexane	.022	.027	.021	.024
Methylcyclopentane	.024	.025	.022	.023
Benzene	.026	.023	.024	.021
Cyclohexane	.068	.068	.062	.062
2-Methylhexane	.044	.051	.041	.047
2,3-Dimethylpentane	.022	.024	.020	.022
1,1-Dimethylcyclopentane	.013	.013	.012	.012
3-Methylhexane	.071	.081	.066	.075
1t,3-Dimethylcyclopentane	.039	.041	.036	.037
1c,3-Dimethylcyclopentane	.033	.035	.031	.032
1t,2-Dimethylcyclopentane	.072	.072	.066	.066
n-Heptane	.398	.453	.366	.417
Methylcyclohexane	1.237	1.250	1.139	1.151
1,1,3-Trimethylcyclopentane	.089	.096	.082	.088
Ethylcyclopentane	.120	.122	.111	.113
2,5-Dimethylhexane	.051	.057	.047	.052
2,2,3-Trimethylpentane	.072	.078	.067	.072
1c,2t,4c-Trimethylcyclopentan	.121	.126	.111	.116
1c,2t,3c-Trimethylcyclopentan	.184	.190	.169	.175
2,3,4-Trimethylpentane	.036	.039	.033	.036
Toluene	1.195	1.075	1.100	.989
2,3-Dimethylhexane	.259	.284	.239	.261
2-Methylheptane	1.032	1.153	.950	1.061
4-Methylheptane	.256	.284	.236	.261
1c,2c,4t-Trimethylcyclopentan	.039	.040	.036	.037
3-Methylheptane	.677	.747	.623	.688
1c,2t,3-Trimethylcyclopentane	1.402	1.418	1.290	1.305
1,4-Dimethylcyclohexane	.525	.537	.483	.494
1,1-Dimethylcyclohexane	.189	.189	.174	.174
2,2,5-Trimethylhexane	.012	.013	.011	.012
3c-Ethylmethylcyclopentane	.195	.196	.179	.180
3t-Ethylmethylcyclopentane	.182	.182	.167	.168
2t-Ethylmethylcyclopentane	.534	.537	.492	.494
1,1-Ethylmethylcyclopentane	.065	.065	.059	.060
1t,2-Dimethylcyclohexane	.899	.904	.827	.832
n-Octane	5.426	6.017	4.995	5.539
i-Propylcyclopentane	.108	.108	.099	.099
2,3,5-Trimethylhexane	.060	.065	.056	.060
2,3,4-Trimethylhexane	.054	.059	.050	.055
N2	.095	.095	.087	.087
2,2-Dimethylheptane	.081	.089	.075	.082
2,5-Dimethylheptane	.650	.695	.599	.640
n-Propylcyclopentane	3.207	3.221	2.953	2.965
2,4-Dimethylheptane	1.271	1.385	1.170	1.275
N4	.050	.050	.046	.046

SAL 000005499

N5	.274	.271	.252	.250
N6	.140	.139	.129	.128
N7	.145	.143	.133	.132
Ethylbenzene	2.068	1.960	1.903	1.712
2,5-Dimethylheptane	.626	.673	.577	.619
P3	.092	.098	.084	.090
N9	.035	.035	.032	.033
m-Xylene	3.517	3.180	3.237	2.927
p-Xylene	2.020	1.826	1.860	1.681
3,4-Dimethylheptane	.062	.067	.057	.061
P4	.413	.440	.380	.405
P5	.128	.137	.118	.126
4-Methyloctane	1.068	1.161	.983	1.069
2-Methyloctane	1.430	1.556	1.317	1.432
1c,2t,4t-Trimethylcyclohexane	.225	.223	.207	.205
3-Ethylheptane	.443	.475	.408	.437
3-Methyloctane	1.691	1.830	1.557	1.685
?	.041	.044	.038	.041
?	.033	.036	.031	.033
o-Xylene	2.506	2.220	2.307	2.044
P6	.051	.055	.047	.051
N11	.749	.742	.689	.683
N12	1.295	1.284	1.192	1.182
N13	.807	.800	.743	.736
P7	.127	.136	.117	.126
i-Butylcyclopentane	.215	.213	.198	.196
N14	.105	.104	.097	.096
?	.024	.024	.022	.022
N15	.066	.066	.061	.061
n-Nonane	8.118	8.819	7.473	8.118
1,1-Ethylmethylcyclohexane	.886	.857	.815	.789
N17	.040	.039	.037	.036
?	.015	.014	.013	.013
i-Propylbenzene	.584	.528	.537	.486
N18	1.001	.969	.921	.892
i-Propylcyclohexane	.491	.478	.452	.440
P10	.067	.065	.062	.060
3-Ethyloctane	.399	.420	.367	.387
2,4-Dimethyloctane	.066	.071	.061	.065
2,6-Dimethyloctane	.270	.290	.249	.267
2,2-Ethylmethylheptane	2.193	2.349	2.019	2.163
n-Butylcyclopentane	.608	.594	.560	.547
P13	.229	.245	.211	.226
P15	1.943	1.896	1.788	1.745
N25	.133	.130	.122	.120
?	.065	.064	.060	.059
n-Propylbenzene	1.035	.939	.952	.864
2-Methylnonane	.577	.614	.532	.565
2,3-Dimethyloctane	.040	.042	.036	.039
2,4-Diethylhexane	.111	.118	.102	.109
N27	.038	.037	.035	.035
1-Methyl-3-ethylbenzene	1.712	1.544	1.576	1.422
1-Methyl-4-ethylbenzene	.640	.577	.589	.531
N28	.567	.554	.522	.510
1,3,5-Trimethylbenzene	1.112	1.002	1.024	.923
?	.104	.094	.096	.086
P22	.404	.428	.372	.394
5-Methylnonane	1.058	1.125	.974	1.035
1-Methyl-2-ethylbenzene	2.035	1.802	1.873	1.659
3-Ethyloctane	.325	.349	.299	.321
N30	.108	.105	.099	.097
1t-Methyl-2-n-propylcyclohexa	1.307	1.276	1.203	1.174
N31	.306	.299	.282	.275
P23	.055	.059	.051	.054
1,2,4-Trimethylbenzene	1.196	1.065	1.101	.980
t-Butylcyclohexane	.339	.331	.312	.304
i-Butylcyclohexane	.583	.569	.536	.523
P24	.146	.157	.135	.144
?	.038	.041	.035	.038
N34	.213	.208	.196	.191
?	.034	.033	.031	.030
N35	.169	.164	.155	.151
i-Butylbenzene	.144	.130	.132	.120
sec-Butylbenzene	.032	.028	.029	.026
n-Decane	6.858	7.323	6.313	6.741
P26	.093	.098	.086	.090

SAL 000005500

[illegible]-me[illegible]	[illegible]	[illegible]	[illegible]	[illegible]
?	.062	.055	.057	.050
?	.109	.096	.101	.088
?	.016	.014	.014	.013
?	.145	.127	.133	.117
N37	.210	.205	.194	.189
?	.134	.131	.123	.120
sec-Butylcyclohexane	1.278	1.247	1.176	1.148
?	.072	.071	.067	.065
?	.126	.123	.116	.113
?	.672	.656	.619	.604
P27	.017	.018	.015	.016
N38	.335	.327	.308	.301
?	.167	.163	.154	.150
1,3-Diethylbenzene	.133	.120	.122	.110
?	.034	.031	.031	.028
1-Methyl-3-n-propylbenzene	.930	.842	.856	.775
?	.061	.055	.056	.051
1-Methyl-4-n-propylbenzene	.207	.187	.190	.172
n-Butylbenzene	.452	.401	.416	.369
1,3-Dimethyl-5-ethylbenzene	.288	.256	.265	.236
1,4-Diethylbenzene	.046	.041	.042	.037
?	.039	.035	.036	.032
1,2-Diethylbenzene	.489	.443	.450	.407
1-Methyl-2-n-propylbenzene	.460	.403	.424	.371
2-Ethyl-1,4-dimethylbenzene	.407	.362	.375	.333
P28	.429	.452	.395	.416
1,4-Dimethyl-2-ethylbenzene	.931	.831	.857	.765
1,3-Dimethyl-4-ethylbenzene	.384	.337	.354	.310
P29	.457	.481	.420	.443
1,2-Dimethyl-4-ethylbenzene	.335	.294	.308	.270
A14	.041	.036	.038	.033
1,3-Dimethyl-2-ethylbenzene	.087	.076	.080	.070
?	.023	.020	.021	.018
?	.032	.028	.029	.026
?	.100	.088	.092	.081
?	.154	.135	.142	.125
?	.134	.118	.123	.108
?	.046	.040	.042	.037
?	.177	.156	.163	.143
(2-Methylbutyl)benzene	.332	.293	.306	.269
A15	.119	.104	.110	.096
n-Undecane	2.838	2.990	2.612	2.753
?	.067	.071	.062	.065
1,2,4,5-Tetramethylbenzene	.100	.088	.092	.081
1,2-Dimethyl-3-ethylbenzene	.115	.102	.107	.094
1,2,3,5-Tetramethylbenzene	.137	.121	.126	.111
?	.073	.065	.068	.059
?	.022	.019	.020	.018
?	.077	.068	.071	.062
P31	.115	.121	.106	.112
?	.031	.032	.028	.030
1-t-Butyl-2-methylbenzene	.016	.014	.015	.013
?	.033	.029	.031	.027
A1	.112	.098	.103	.091
A2	.027	.024	.025	.022
A3	.253	.223	.233	.205
A4	.107	.094	.098	.086
A5	.158	.139	.146	.128
?	.025	.022	.023	.020
n-Pentylbenzene	.058	.051	.053	.047
1t-M-2-(4-MP)cyclopentane	.042	.042	.039	.038
A6	.057	.051	.053	.047
A7	.054	.048	.050	.044
A8	.068	.060	.063	.055
P32	.055	.058	.051	.054
?	.047	.049	.043	.045
A9	.101	.089	.093	.082
?	.128	.113	.118	.104
?	.011	.010	.010	.009
?	.007	.006	.007	.006
A17	.017	.014	.016	.013
?	.009	.007	.008	.006
A10	.034	.030	.032	.028
n-Dodecane	.163	.169	.150	.155
?	.018	.018	.016	.017

SAL 000005501

ALUMINUM OXIDE

FCC CATALYST (PER P ANDREWS)

BILLINGS		1.36 TON/DAY	46% Al_2O_3
DENVER		1.67	48%
LAKE CHAS.		2.53	52%
PONCA CITY	4	1.39	51%
	5	2.46	55%

SAL 000005502

Chemical	Vapor Pressure @ 70°F (PSIA)
Benzene [1]	1.5
Toluene [1]	0.4
Ethyl Benzene [2]	0.18
Xylenes [2]	0.19
Cyclohexane [1]	1.6
Naphthalene [2]	0.0045
Styrene [2]	0.0967
Cumene [2]	0.0619
Pseudo-Cumene [2]	0.0393
Biphenyl [2]	0.0193
Gasoline [1]	6.2
Crude [1]	3.4
Kerosene [1]	0.011
Diesel [1]	0.009
Naphtha [1]	1.6

(1) AP-42 VERSION 3 TABLE 4.3-2

(2) EPA RELEASE CALCULATION GUIDANCE DOCUMENT

Made By
Checked By
Date

Conoco Inc.
Calculation Sheet

Title

Job No.
Field
State

CRUDE COMPOSITION

BENZENE	0.3	(OR 0.1 DEPENDING ON REF)
CYCLOHEXANE	0.76	
TOLUENE	0.79	
ETHYL BENZENE	0.29	
M-XYLENE	0.47	
P-XYLENE	0.27	
O-XYLENE	0.29	
CUMENE	0.17	
PSEUDO CUMENE	0.12	
NAPATHALENE	0.01	
STYRENE	0.05	
BIPHENYL	NO DATA	

SEE NIPER GC ANALYSIS IN APPENDIX E

Conoco Inc.
Calculation Sheet
Made By
Checked By
Date
Page of
Title
Job No
Field
State

CONOCO

ACHIEVING SAFETY EXCELLENCE

INTEROFFICE COMMUNICATION

To: All Supervisors

From: Tim Myers

Date: January 07, 1988

Subject: Lab Results Of The Refinery's Streams That Have Been Tested For Benzene Content

Attached you will find a list of the refinery's streams that have been tested for Benzene content. The samples dated 12-14-87, were taken after the HAD from Tank 27 had been injected into the # 3 CTU's crude charge for over a week. The total Benzene content of # 3 CTU's crude charge was 0.7% .

We are monitoring a represented number of the job tasks where an employee is exposed to a stream with a Benzene concentration of 0.1% . A list should be develop by the Operating Department of all equipment that is in service of these streams, or any like streams that would contain 0.1 % Benzene.

Please contact the Safety Department, in advance, as equipment in service of these streams is brought down for repair. This will help us in setting up the personnel monitoring required by the new Benzene Standard.

Many of the employees have already received the results of the monitoring that they took part in. Additional results will be made available as we receive it.

Please contact your area Safety Supervisor or the Safety Department with any questions concerning Benzene Exposure.

Tim Myers

Tim Myers
Safety Supervisor

BENZENE RESULTS OF REFINERY'S STREAMS

UNIT	SAMPLE	FIRST RESULT	SECOND RESULT
# 1 HDS UNIT	# 1 HDS EFFLUENT	0.18% (01-31-86)	
# 2 COKER	# 2 COKER GASOLOINE	0.43% (01-28-86)	0.19% (12-14-87
# 2 CRU & HDS	# 2 HDS CHARGE	1.16% (01-31-86)	0.90% (12-14-87
	# 2 REF. REFORMATE	2.71% (01-31-86)	3.76% (12-14-87
# 2 CRUDE UNIT	# 2 LSR GASOLINE	1.95% (01-31-86)	5.49% (12-14-87
	# 2 NAPHTHA	0.18% (01-31-86)	0.21% (12-14-87
# 3 CRU & HDS	# 3 HDS CHARGE	1.16% (01-31-86)	1.01% (12-14-87
	# 3 REF STB OH LIQ	<0.1% (12-14-87)	
	# 3 REFORMER CHARGE	1.17% (12-14-87)	
	# 3 REFORMER REFORMAT	2.71% (01-31-86)	5.20% (12-14-87
# 3 CTU	# 3 HOD	<0.01% (02-04-86)	0.03% (12-14-87
	CHARGE (W/ 500 BPD HAD)	0.3% (12-14-87)	
	Desalted Water	<0.01% (12-14-87)	
# 3 CTU & VAC	# 3 LSR GASOLINE	2.79% (02-04-86)	5.28% (12-14-87
	# 3 NAPHTHA	0.41% (01-31-86)	0.41% (12-14-87
# 4 HDS	# 4 HDS Strip. OH LQ	0.19% (12-14-87)	
# 4 Mod	# 4 Frac. Btms.	<0.01% (12-14-87)	
	# 4 Frac. HOD	<0.01% (12-14-87)	
	# 4 Frac. Naphtha	0.07% (12-14-87)	
	# 4 Frac. OH Liquid	2.76% (12-14-87)	
# 6 HDS	# 6 HDS Strip. OH LQ	0.12% (12-14-87)	
ALKYLATION UNIT	TOTAL ALKYALTE	< 0.01% (02-02-86)	
CASINGHEAD	PBC DENUDED CASINGHEAD	1.29% (02-03-86)	2.83% (12-14-87
CAT POLY UNIT	CAT POLY GASOLINE	< 0.01% (01-28-86)	
FCC PRODUCT FRACT	FCC GASOLINE	1.21% (01-28-86)	0.93% (12-14-87
	LV% FCC GASOLINE	1.21% (01-28-86)	
GRP	GRP GASOLINE	0.39% (01-28-86)	0.45% (12-14-87
LITE GASO. SPLITTER	PRIM TWR BTMS	<0.01% (01-31-86)	
	PRIM TWR OH GASOLINE	0.32% (01-31-86)	1.41% (12-14-87
T U FARM	TK. 38 LSR	1.30% (12-14 87	
	TK. 85 FCC/CP	0.87% (12-14-87)	SAL 000005505
THERMAL CRACKER	THERMAL GASOLINE	0.25% (02-04-86)	1.66% (12-14-87
	W-10 GASOLINE	3.15% (02-04-86)	3.78% (12-14-87
	W-10 NAPHTHA	2.29% (02-04-86)	4.62% (12-14-87

Calculated conversion of benzene L. Vol. % to Wt. %
from Lab Report No. K-15-87, dtd 11-4-87

$$\text{By Vol\%} \times \frac{0.882}{\text{Stream density g/ml}} = \text{By wt. \%}$$

Ponca City Stream	API Gravity @ 60°F	Density @ 15°C, g/ml	Vol % Benzene	Wt % Benzene
Leaded Regular Gasoline	57.7	0.748	3.4	4.0
Unleaded Regular Gasoline	58.4	0.745	2.1	2.5
Super Unleaded Gasoline	61.0	0.735	1.9	2.3
5 FCC Light Gasoline	63.3	0.726	1.0	1.2
5 FCC Heavy Gasoline	33.2	0.859	0.7	0.7
4 FCC Light Gasoline	63.4	0.726	1.0	1.2
4 FCC Heavy Gasoline	32.6	0.862	0.9	0.9
2 Reformer Raffinate (95 RON)	49.0	0.783	5.0	5.6
3 Reformer Reformate (97 RON)	46.5	0.795	4.3	4.8
Straight Run Gasoline	82.9	0.659	3.2	4.3
Cat Poly Gasoline	60.7	0.736	<0.1	<.1
Alkylate	72.6	0.693	0.2	0.3

SAL 000005506

Liquid Composition

Close to what we have now

	Total Gasp. 1973 wt. %	Low Aro. Gasoline 1970 wt. %	High Aro. Gasoline 1970 wt. %	Regular Gasoline 1968 wt. %	Premium Gasoline 1968 wt. %	6	7
Ethylene							
1,3-butadiene							
Benzene	0.6	0.31	3.50	1.4	0.8		
Toluene	0.9	3.40	21.96	5.6	11.8		
total C8 aromatics	0.2	2.96	13.54	10.0	9.0		
Xylenes	0.2	2.47	10.68	7.3	7.3		
Styrene							
Naphthalene		0.37	0.49	0.24	0.10		
C6+	78.1			76.6	74.9		

Seems very high compared to other data

Liquid C

		LC Field PBC 1985	LC Denuded Casinghead 1985	LC #2CTU L.S.R. 1985	LC #3CTU L.S.R. 1985	LC W OH 1985
Propylene none	LV,%					
1,3-butadiene none						
Benzene		0.9	1.8	3.2	2.2	1.7
Toluene		0.7	1.2	6.5	3.0	T
total C8 aromatics		0.3	0.5	0.6	0.2	
Xylenes						
Styrene						
Naphthalene						
Gasoline Throughput 287 TPY (from [illegible] 226.7 TPY)						
C6+		22.8	40.7	89.6	81.8	32.4
[illegible]						
[illegible]						
NH_3						
S						

SAL 00000508

Denver [illegible] TK [illegible]

General [illegible] according to loading
Loading Empty - 1972

Bottom loading of Tr[illegible]
Hatches open

Mol %	Regular Hat. finish TK bel vapor line 1967	Prem. Hat. Floating Roof 1967	Low Crude Tower 3 QH Cone roof 1967	Sweet Crude Oil Storage Cone Roof 1967	No. 5 Hatch Sealed	No. 3 Hatch Sealed	No. 4 Hatch Sealed	No. 2 Hatch unlocked	No. 1 Hatch unlocked	No. 4 Hatch locked open	No. 10 Hatch locked open	No. 11 Hatch locked open
C1	—		0.2	0.1								
C2			0.8	0.3	C_2 T	0.1	T	T	T	0.3	0.2	0.1
C3 - Propylene	0.3	0.1	0.3	0.1								
C3	0.3	0.1	2.2	1.5	C_3 0.1	0.4	0.1	T	T	0.7	0.5	0.4
C4 -	0.3	T	0.2	T								
iC4	0.7	T	0.8	0.7	C_4 6.6	5.6	2.4	1.0	1.0	14.2	11.7	11.5
nC4	1.5	0.6	2.2	2.2								
C5 -	0.1	T	T	0.1								
iC5	0.3	0.1	1.2	0.5	C_5 3.0	1.6	1.0	0.6	0.6	7.4	6.0	6.1
nC5	0.3	0.2	0.9	0.4								
C6+	0.2	0.1	0.7	0.1	C_{6+} 1.7	0.9	0.9	0.2	0.1	2.4	2.6	2.2
Air, incl excess N_2	96.0	98.8	90.1	94.0	Air 88.6	91.4	95.6	98.2	98.3	75.0	79.0	79.7
CO_2	T	T	0.3	T								
Vapor Mol. Wt. @ 60°F	59	61	56	55	Vapor Mol. Wt. 66	63	67	66	65	64	65	65
Paraffin	3.3	1.1	9.0	5.8	Par.							
Olefin	0.7	0.1	0.5	0.2	Olef.							
Aromatic			(0.1)		Aro.							
Total HC	4.0	1.2	9.6	6.0	Total HC 11.4	8.6	4.4	1.8	1.7	25.0	21.0	20.3
	Vapor M.W. @ 60°F											
	16				0.2 3.2	0.1 1.6						
"	30				0.8 24	0.3 9		0.1				
Propylene	42	0.3	[illegible]	0.1 4.2	0.3 12.6	0.1 4.2						
Propane	44	0.3	[illegible]	0.1 4.4	2.2 96.8	1.5 [illegible]	0.1 4.4	0.4 17.6	0.1 4.4			
Butane	56	0.3	[illegible]		0.2 11.2							

SAL 000005509

APPENDIX F

SOLID WASTE DATA AND CALCULATIONS

SAL 000005510

Conoco Inc.
Calculation Sheet

Made By
Checked By
Date
Page of

Title

Job No.
Field
State

LAND RELEASE SUMMARY
LAKE CHARLES

CHEMICAL	LANDFARM RELEASE TO LAND (LB/YR)	LANDFARM RELEASE TO AIR (LB/YR)
BENZENE	10.	93.
TOLUENE	150.	150.
ETHYL BENZENE	71.	35.
STYRENE	18.	9.
XYLENES	340.	160.
PHENOL	15.	1.
NAPHTHALENE	1900.	94.

SAL 000005511

Conoco Inc
Calculation Sheet

Made By
Checked By
Date
Page of

Title

Job No.
Field
State

LAND RELEASES - LAKE CHARLES

SOLID WASTE EMISSIONS

BIOLOGICAL SOLIDS - COMPOSITION PER ATTACHMENT TABLE 5-3

1987 VOLUME = 17,390 YDS. (PER BRANDT BUTCHER)

$$17{,}390 \text{ YDS} \times \frac{3^3 \text{ FT}^3}{\text{CYD}} \times \frac{62.4 \text{ LB}}{\text{CF}} \times \frac{1}{2000 \text{ LB}} = 14{,}650 \text{ TONS}$$

$$\text{TOTAL TONS} \times \frac{(\text{TABLE 5-3})}{\text{TON } 10^6} \times \frac{2000 \text{ LB}}{\text{TON}} = \text{LBS EMITTED}$$

BENZENE $= 14{,}650 \times \frac{.239}{10^6} \times \frac{2000}{1} = 7.0$ LBS/YEAR

TOLUENE $= 14650 \times \frac{.706}{10^6} \times \frac{2000}{1} = 20.7$ LBS/YEAR

ETHYL BENZENE $= 14650 \times \frac{.374}{10^6} \times \frac{2000}{1} = 11.0$ LBS/YEAR

XYLENES $= 14650 \times \frac{2.315}{10^6} \times \frac{2000}{1} = 67.8$ LBS/YEAR

MEK $= 14650 \times \frac{.95}{10^6} \times \frac{2000}{1} = 27.8$ LBS/YEAR

PHENOL $= 14650 \times \frac{.26}{10^6} \times \frac{2000}{1} = 7.6$ LBS/YEAR

NAPHTHALENE $= 14650 \times \frac{8.6}{10^6} \times \frac{2000}{1} = 252$ LBS/YEAR

LEAD $= 14650 \times \frac{4.5}{10^6} \times \frac{2000}{1} = 132$ LBS/YEAR

API SLUDGES - COMPOSITION PER ATTACHMENT TABLE 5-4 ②

1987 VOLUME = 1320 YDS (PER BRANDT BUTLER)

$$1320 \text{ YDS} \times \frac{3^3 \text{ FT}^3}{\text{CYD}} \times \frac{62.4 \text{ LB}}{\text{CF}} \times \frac{1}{2000 \text{ LB}} = 1112 \text{ TONS}$$

$$\text{TOTAL TONS} \times \frac{(\text{TABLE } 5\text{-}4)}{\text{TON } 10^6} \times \frac{2000 \text{ LB}}{\text{TON}} = \text{LBS EMITTED}$$

BENZENE $= 1112 \times \frac{43}{10^6} \times \frac{2000}{1} = 95.6$ LBS/YR

TOLUENE $= 1112 \times \frac{128}{10^6} \times \frac{2000}{1} = 284.7$ LBS/YR

ETHYL BENZENE $= 1112 \times \frac{43}{10^6} \times \frac{2000}{1} = 95.6$ LBS/YR

STYRENE $= 1112 \times \frac{12.2}{10^6} \times \frac{2000}{1} = 27.1$ LBS/YR

XYLENES $= 1112 \times \frac{196}{10^6} \times \frac{2000}{1} = 435.9$ LBS/YR

MEK $= 1112 \times \frac{2.1}{10^6} \times \frac{2000}{1} = 4.7$ LBS/YR

PHENOL $= 1112 \times \frac{3.8}{10^6} \times \frac{2000}{1} = 8.5$ LBS/YR

NAPHTHALENE $= 1112 \times \frac{791}{10^6} \times \frac{2000}{1} = 1759$ LBS/YR

LEAD $= 1112 \times \frac{10.8}{10^6} \times \frac{2000}{1} = 24$ LBS/YR

SAL 000005513

Landfarm Releases to Air

(Solid Waste emissions + API Sludge) × [illegible]
(LBS/YR) (see attachment)

Benzene (7 + 95.6)(.903) = 92.65

Toluene (20.7 + 824.7)(.494) = 150.87

Ethyl Benzene [illegible] - 75.6)(.325) = 55.5

Xylene (161.8 + 435.9)(.320) = 161.2

MEK (27.8 + 4.7)(.714) = 23.[illegible]1

Phenol (7.6 + 2.3)(.076) = 1.22

Naphthalene (252 + 1759)(.047) = 94.5

[illegible] (1[illegible] + 21)[illegible] = 156 ← assume all goes to air

[illegible]

SAL 000005514

Conoco Inc.
Calculation Sheet

Made By
Checked By
Date
Page of

Title

Job No.
Field
State

CHEMDAT 6
(DEFAULT PARAMETERS)

LAND TREATMENT MODEL DATA
(land treatment)

L,Loading (g oil/cc soil)	0.036
Enter Ci x 10^6 VO ppmw	2000
1.Depth (cm)	20
Total porosity	0.41
Air Porosity (default=0)	0.5
MW oil	282
VO diss. in water, enter 1	0
Time of calc. (days)	365.25
Biodegradation, enter 1	1
Temperature (Deg. C)	25
Wind Speed (m/s)	4.47
Area (m2)	25000

COMPOUND NAME	LANDTREATMENT FRACTION LOST AIR	BIO	INTERMEDIATE TIME 365.25 days AIR	BIO
METHYL ETHYL KETONE	0.714	0.286	0.714	0.286
BENZENE	0.903	.097	0.903	0.097
TOLUENE	0.494	0.506	0.492	0.508
CRESOLS	0.056	0.944	0.056	0.944
NAPHTHALENE	0.047	0.953	0.047	0.953
PHENOL	0.076	0.924	0.076	0.924
CARBON TETRACHLORIDE	0.998	0.002	[illegible]	0.000
TRICHLOROETHANE(1,1,1)	0.998	0.002	0.998	0.000
METHANOL	0.966	0.034	0.966	0.034
ETHYLBENZENE	0.333	0.667	0.362	0.638
CUMENE (isopropyl benzene)	0.998	0.002	0.968	0.000
XYLENE(-o)	0.320	0.680	0.320	0.680

Estimating Land Treatment Air Emissions

Based on EPA Land Treatment Model

Compound	Land Treatment Fraction Lost: Air	Land Treatment Fraction Lost: Biodegradation
Benzene	0.903	0.097
Toluene	0.494	0.506
Xylene	0.320	0.680
Phenol	0.076	0.924
Ethylbenzene	0.333	0.667
Cresol	0.056	0.944
Naphthalene	0.047	0.953
MEK	0.714	0.286
MIK	0.969	0.031
Acetone	0.978	0.022

SAL 000005516

TABLE 5-3

SUMMARY OF [redacted] CONTENT WASTE CHARACTERISTICS

Parameter	Number of Samples Above D.L.	Mean	Range Lower	Range Upper	S.D.	C.V.
Oil and Grease, mg/kg	6	53100	1900	170000	63720	1.20
Chloride, mg/kg	5	1502	580	4000	1443	0.96
Metals, mg/kg						
Arsenic	1	0.37	<0.23	<4.3	***	
Barium	6	66	32	124	35	0.53
Beryllium	2	0.18	<0.096	0.22	0.06	0.36
Cobalt	6	1.1	0.6	2.1	0.6	0.51
[redacted]						
Selenium	4	2.7	0.7	<13	2.5	0.93
Vanadium	6	2.0	1.1	3.8	1.0	0.51
Mercury	4	0.4	<0.10	0.88	0.3	0.91
Volatile Organics, mg/kg						
Carbon disulfide	1	0.0027	<0.005	0.0027	***	
Chloroform	2	0.012	0.012	<1.2	***	
[redacted]						
Chlorobenzene	1	0.007	<0.005	<1.2	***	
[redacted]						
Semi-volatile Organics, mg/kg						
[redacted]						
Phenanthrene	6	30	3.2	81	32	07
Anthracene	5	8.6	1.2	31	13	1.48
Fluoranthene	6	40	3.0	180	70	1.74
Pyrene	6	140	9.5	640	248	1.77
Bis(2-ethyylhexyl)phthalate*	2	0.39	0.26	<26	0.[illegible]8	0.47
Benzo(a)anthracene	6	47	3.3	220	66	1.82
Chrysene	6	82	4.8	390	[illegible]52	1.85
Benzo(b)fluoranthene**	5	58	<0.67	260	[illegible]13	1.97
Benzo(k)fluoranthene	5	58	<0.67	260	[illegible]13	1.97
Benzo(a)pyrene	4	24	<0.67	80	38	1.56
Dibenzo(a,h)anthracene	5	3.20	0.20	11	4.50	1.41
2-Methyl naphthalene	6	22	3.0	66	[illegible]	1.10

D.L. = Detection Limit

* = compound detected in blank

** = coeluting isomers

*** = Standard deviation not possible for one sample.

SAL 000005517

TABLE 5-4

SUMMARY OF [illegible] CONTENT WASTE CHARACTERISTICS

Parameter	Number of Samples	Mean	Range Lower	Range Upper	S.D	C.V.
Oil and Grease, mg/kg	6	143950	2700	310000	105859	0.74
Chloride, mg/kg	5	3120	1200	9800	3743	1.20
Metals, mg/kg						
Arsenic	2	0.42	<0.23	<4.3	0.07	0.17
Barium	7	83.3	34.0	145.0	40.1	0.48
Beryllium	4	0.14	<0.10	0.18	0.03	0.23
Cobalt	7	2.1	0.6	4.7	1.7	0.81
[redacted]						
Selenium	4	4.5	0.4	<13	[illegible]	[illegible]
Vanadium	7	6.8	1.0	20.0	[illegible]	[illegible]
Mercury	3	0.43	<0.074	0.50	0.13	0.30
Volatile Organics, mg/kg						
[redacted]						
Semi-volatile Organics, mg/kg						
[redacted]						
1,2-Dichlorobenzene	1	3.4	<3.3	<120	***	
[redacted]						
Phenanthrene	6	1930	<33	7900	2953	[illegible]
Anthracene	6	131	28	250	73	0.56
Di(n)butyl phthalate*	1	310	<3.3	310	***	
Fluoranthene	6	109	27	220	[illegible]	[illegible]
Pyrene	6	519	<33	1200	[illegible]	[illegible]
Bis(2-ethylhexyl)phthalate	1	5.8	<3.3	<120	***	
Benzo(a)anthracene	6	70	15	140		
Chrysene	6	143	25	280	[illegible]	[illegible]
Benzo(b)fluoranthene**	6	39	13	90	[illegible]	[illegible]
Benzo(k)fluoranthene	6	39	13	90	27	[illegible]
Benzo(a)pyrene	5	33	<3.3	72	25	[illegible]
Dibenzo(a,h)anthracene	2	3.2	1.4	<120	2.5	[illegible]
2-Methyl naphthalene	7	2384	300	4800	1914	0.80

D.L. = Detection Limit

* = compound detected in blank

** = coeluting isomers

*** = Standard deviation not possible for one sample.

SAL 000005518

2 MM ~~[illegible]~~ gal Sulfidic Caustic

1987 ~ 15% Caustic

224 M gal Phenolic Caustic

HDS Catalyst Disposal - as SOLID WASTE

- 116 tons - 1987

Reclamation/Recycle - ~~[illegible]~~ 41 tons

AMAX. Nickle, Inc.
P.O. Box 1336
Braithwaite, Louisiana 70040

SAL 000005519

Landfarm
230 M gal/yr

TABLE 5-4
SUMMARY OF HIGH OIL CONTENT WASTE CHARACTERISTICS

Parameter	Number of Samples	Mean	Range Lower	Range Upper	S.D.	C.V.
Oil and Grease, mg/kg	6	143950	2700	310000	105859	0.74
Chloride, mg/kg	5	3120	1200	9800	3743	1.20
Metals, mg/kg						
Arsenic	2	0.42	<0.23	<4.3	0.07	0.17
Barium	7	83.3	34.0	145.0	40.1	0.48
Beryllium	4	0.14	<0.10	0.18	0.03	0.23
Cobalt	7	2.1	0.6	4.7	1.7	0.81
Chromium	7	7.7	4.6	13.0	2.7	0.36
Lead	6	10.8	2.3	20.0	7.2	0.66
Nickel	4	8.3	<2.1	12.0	3.7	0.45
Selenium	4	4.5	0.4	<13	4.1	0.90
Vanadium	7	6.8	1.0	20.0	6.7	0.98
Mercury	3	0.43	<0.074	0.50	0.13	0.30
Volatile Organics, mg/kg						
Benzene	7	43	10	100	32	0.75
Toluene	7	128	38	310	99	0.77
Ethylbenzene	7	43	17	86	24	0.56
Styrene	4	12.2	4.5	33	13.9	1.15
Total Xylenes	7	196	17	520	171	[illegible]
Methyl ethyl ketone	1	2.10	2.10	<24	***	
Semi-volatile Organics, mg/kg						
Phenol	1	3.8	3.8	<67	***	
1,2-Dichlorobenzene	1	3.4	<3.3	<120	***	
Naphthalene	7	791	140	1600	477	0.60
Phenanthrene	6	1930	<33	7900	2953	1.53
Anthracene	6	131	28	250	73	0.56
Di(n)butyl phthalate*	1	310	<3.3	310	***	
Fluoranthene	6	109	27	220	71	0.65
Pyrene	6	519	<33	1200	415	0.80
Bis(2-ethylhexyl)phthalate	1	5.8	<3.3	<120	***	
Benzo(a)anthracene	6	70	15	140	43	0.61
Chrysene	6	143	25	280	92	0.64
Benzo(b)fluoranthene**	6	39	13	90	27	0.69
Benzo(k)fluoranthene	6	39	13	90	27	0.69
Benzo(a)pyrene	5	33	<3.3	72	25	0.75
Dibenzo(a,h)anthracene	2	3.2	1.4	<120	2.5	0.80
2-Methyl naphthalene	7	2384	300	4800	1914	0.80

D.L. = Detection Limit
* = compound detected in blank
** = coeluting isomers
*** = Standard deviation not possible for one sample.

SAL 000005520

Landfarm
3.5 MM gal/yr

TABLE 5-3
SUMMARY OF LOW OIL CONTENT WASTE CHARACTERISTICS

Parameter	Number of Samples Above D.L	Mean	Range Lower	Range Upper	S.D.	C.V.
Oil and Grease, mg/kg	6	53100	1900	170000	63720	1.20
Chloride, mg/kg	5	1502	580	4000	1443	0.96
Metals, mg/kg						
Arsenic	1	0.37	<0.23	<4.3	***	
Barium	6	66	32	124	35	0.53
Beryllium	2	0.18	<0.094	0.22	0.06	0.36
Cobalt	6	1.1	0.6	2.1	0.6	0.51
Chromium	5	9.5	<5.9	23.0	7.6	0.79
Lead	4	4.5	1.9	11.0	4.3	0.97
Nickel	3	4.2	<2.0	5.7	1.3	0.31
Selenium	4	2.7	0.7	<13	2.5	0.93
Vanadium	6	2.0	1.1	3.8	1.0	0.51
Mercury	4	0.4	<0.10	0.88	0.3	0.91
Volatile Organics, mg/kg						
Carbon disulfide	1	0.0027	<0.005	0.0027	***	
Chloroform	2	0.012	0.012	<1.2	***	
Benzene	4	0.239	0.016	0.660	0.300	1.25
Toluene	6	0.706	0.068	2.400	0.889	[illegible]
Chlorobenzene	1	0.007	<0.005	<1.2	***	
Ethylbenzene	6	0.374	0.052	1.000	0.354	[illegible]
Total Xylenes	6	2.315	0.290	5.600	2.016	0.87
Methyl ethyl ketone	2	0.950	<0.010	1.600	0.919	0.97
Semi-volatile Organics, mg/kg						
Phenol	2	0.26	0.11	<26	0.21	0.80
Naphthalene	6	8.6	0.76	34.0	12.7	1.48
Phenanthrene	6	30	3.2	81	32	1.07
Anthracene	5	8.6	1.2	31	13	1.48
Fluoranthene	6	40	3.0	180	70	1.74
Pyrene	6	140	9.5	640	248	1.77
Bis(2-ethyylhexyl)phthalate*	2	0.39	0.26	<26	0.18	0.47
Benzo(a)anthracene	6	47	3.3	220	86	1.82
Chrysene	6	82	4.8	390	152	1.85
Benzo(b)fluoranthene**	5	58	<0.67	260	113	1.97
Benzo(k)fluoranthene	5	58	<0.67	260	113	1.97
Benzo(a)pyrene	4	24	<0.67	80	38	1.56
Dibenzo(a,h)anthracene	5	3.20	0.20	11	4.50	1.41
2-Methyl naphthalene	6	22	3.0	66	24	1.10

D.L. = Detection Limit
* = compound detected in blank
** = coeluting isomers
*** = Standard deviation not possible for one sample.

SAL 000005521

Landfarm to land:

All equal zero.

See "Estimating Land Treatment Air Emissions"
Based on EPA Land Treatment Model for
Benzene
Toluene
Xylenes
Ethyl Benzene
Naphthalene

Based on the fact that Naphthalene is made up of two Benzene-like rings & that it biodegrades totally, the assumption was made that
Cyclohexane
Cumene
pcumene
biphenyl
Styrene
all also biodegrade totally

SAL 000005522

Conoco Inc.
Calculation Sheet

Job No.

Title

Field

State

APPENDIX G

WASTEWATER, API SEPARATOR / DAF-IAF, AND COOLING TOWER DATA

SAL 000005523

Conoco Inc.
Calculation Sheet

Made by
Checked by
Date
Page

Title

Job No.
Field
State

WASTEWATER EFFLUENT

RATE = 2.4 MMGAL/DAY^{+} × 365 × $\frac{CF}{7.4805\ GAL}$ × $\frac{62.4\ LB}{CF}$ = 7.31×10^{9} LB/YR

API SEPARATOR - VOC

AP-42 FACTOR (COVERED) = 0.2 LB VOC/1000 GAL W.W.

RATE = 750 GAL/MIN* × 60 × 24 × 365 × $\frac{.02\ LB\ VOC}{1000\ GAL}$ × $\frac{1\ ton}{2000\ lb}$ = 39.42 TPY

DAF SYSTEM - VOC

AP-42 FACTOR = .01 LB VOC / 1000 GAL

RATE = 600 GAL/MIN* × 60 × 24 × 365 × $\frac{.01\ LB\ VOC}{1000\ GAL}$ × $\frac{1\ ton}{2000\ LB}$ =

IAF SYSTEM - VOC

AP-42 FACTOR = .033 LB VOC / 1000 GAL

RATE = 80 $\frac{GAL}{MIN}^{*}$ × $\frac{1}{7.48}$ × 62.4 × 60 × 24 × 365 × $\frac{.033}{1000}$ × $\frac{1}{2000}$ = 5.79 T

COOLING TOWER - VOC

AP-42 FACTOR = 1.2 LB VOC/MBBL (APPENDIX B: TABLE 9.1-2 FUG. EMISSION FACTO

RATE = 49,827.7 MBBL CRUDE^{o} × 1.2 LB VOC/MBBL = 29.90 TPY VOC

\+ AVERAGE RATE
* RATES PER BRANDT BUTLER
o BLUE BOOK

SAL 000005524

Conoco Inc
Calculation Sheet

Job No

Title

Field

State

REVISED VOC EMISSION FACTORS FOR REFINERY WASTE WATER SYSTEMS

Based on more recent information, we suggest the following emission factor. Source: "VOC Emissions From Petroleum Refinery Wastewater Systems - Background Information For Proposed Standards" Preliminary Draft July 1984.

I. API Separator

AP-42 emission factors:			
Uncontrolled		5.0	$lb/10^3$ Gal.
Controlled		0.2	$lb/10^3$ Gal.
Revised Factors:			
Uncontrolled	(420kg/$\bar{M}$ Gals.)	0.93	$lb/10^3$ Gal.
Covered	(85% Control)	0.14	$lb/10^3$ Gal.
Covered w/Vent to Vapor Collection System	(97% Control)	0.03	$lb/10^3$ Gal.

II. Air Flotation Systems

AP-42 Emission Factor			
Dissolved Air Flotation (DAF)		0.01	$lb/10^3$ Gal.
Revised Factors:			
Dissolved Air Flotation (DAF)			
Uncontrolled	(15.2 kg/$\bar{M}$ Gal.)	0.033	$lb/10^3$ Gal.
Cover w/Atmospheric Vent	(77% Control)	0.008	$lb/10^3$ Gal.
Cover w/Vent to Vapor Collection System	(97% Control)	0.001	$lb/10^3$ Gal.
Induced Air Flotation (IAF)			
Completely Uncontrolled	(15.2 kg/$\bar{M}$ Gal.)	0.033	$lb/10^3$ Gal.
Covered w/Doors Open	(8.7 kg/$\bar{M}$ Gal.)	0.02	$lb/10^3$ Gal.
* Covered w/Doors Closed	(3.0 kg/$\bar{M}$ Gal.)	0.0066	$lb/10^3$ Gal.
Covered (Tight Seals)	(2.3 kg/$\bar{M}$ Gal.)	0.005	$lb/10^3$ Gal.
Covered w/Vent To Vapor Collection System	(0.45kg/$\bar{M}$ Gal.)	0.001	$lb/10^3$ Gal.

SAL 00000525

* Typical IAF Operation

TOTAL RELEASE SUMMARY — WASTE WATER
LBS/YR

CHEMICAL	MAX INFLUENT	VOLATIZED	EFFLUEN
BENZENE	732	176	37
CYCLOHEXANE	732	93	37
ETHYL BENZENE	732	176	37
TOLUENE	366	84	37
XYLENES	732	176	37
CUMENE	732	228	37
NAPHTHALENE	732	—	37
1,3 BUTADIENE	—	—	—
CARBON TETRACHLORIDE	732	264	37
1,1 DICHLOROETHYLENE (EDC)	732	556	
STYRENE	732	84	37

CHROMIUM - SLUDGE - 1023
VOLATIZED - 0

SAL 000005526

WASTEWATER TREATMENT EVAPORATION LAKE CHARLES

~ 2.4 MMGAL/DAY REF. EPA 560/4-88-002 TABLE A2

$$876{,}000{,}000 \frac{GAL}{YR} \times \frac{CF}{7.4805\ GAL} \times \frac{62.4\ LB}{CF} = 7.31 \times 10^9\ LB/YR$$

BENZENE (N.D.)

$$7.31 \times 10^9 \frac{LB}{YR} \times \frac{5\ LB}{10^9\ LB} = 36.6\ LB/YR \text{ INEFFLUENT}$$

$$\frac{36.6\ LB/YR}{.05\ (95\%\ REMOVED)} = 732\ LB/YR \text{ MAX INFLUENT}$$

$$732\ LB/YR \times .24 = 175.7\ LB/YR \text{ VOLATIZED}$$

CYCLOHEXANE (N.D.)

$$732\ LB/YR \times .10 = 73.1\ LB/YR \text{ VOLATIZED}$$

ETHYL BENZENE (N.D.)

$$732\ LB/YR \times .24 = 175.7\ LB/YR \text{ VOLATIZED}$$

TOLUENE (N.D.)

$$7.31 \times 10^9 \frac{LB}{YR} \times \frac{5\ LB}{10^9\ LB} = \frac{36.6\ LB/YR}{.10\ (90\%\ REMOVED)} = 366\ LB/YR \text{ MAX INFLUENT}$$

$$366\ LB/YR \times .23 = 84.2\ LB/YR \text{ VOLATIZED}$$

XYLENES (N.D.)

$$732\ LB/YR \times .24 = 175.7\ LB/YR \text{ VOLATIZED}$$

SAL 000005527

Conoco Inc.
Calculation Sheet

Made By
Checked By
Date
Page of
Title
Job No.
Field
State

1,3 BUTADIENE – ALL PROBABLY VOLATIZED PRIOR TO LAGOON

PROPYLENE/ETHYLENE – NOT ANALYZED

CRESOLS – (2 COMPOUNDS; NON DETECTED)
NONE VOLATIZED

BIPHENYL – (ASSUMED NAPHTHALENE PROPS) = 0 VOLATIZED
(SIMILIAR V.P)

CUMENE – (NOT ON LIST BUT DETECTED IN P.C. SAMPLE)

$$\frac{36.6}{.05} \times .38 = 278.2 \text{ LB/YR VOLATIZED}$$

NAPHTHALENE (N.D)

$$\frac{36.6}{.05} = 732 \times 0 = 0 \text{ VOLATIZED}$$

CARBON TETRACHLORIDE (N.D.)

$$7.31 \times 10^{9} \times \frac{5}{10^{9}} \times \frac{1}{.10 \text{ (90\% Removal)}} \times .72 = 264 \text{ LB/YR VOLATIZED}$$

CHROMIUM TOTAL = .14 MG/L (EFFLUENT)
DISSOLVED = .098 MG/L

$$.14 - .098 = .042 \frac{\text{MG}}{\text{L}} \times \frac{\text{G}}{1000 \text{ MG}} \times \frac{1 \text{ LB}}{453.6 \text{ G}} \times \frac{1000 \text{ L}}{264.2 \text{ GAL}} \times \frac{2.4 \times 10^{6} \text{ GAL}}{\text{DAY}}$$

$$\times \frac{365 \text{ DAY}}{\text{YR}} = \frac{307 \text{ LB/YR}}{.30 \text{ (70\% Removal)}} = 1023 \text{ LB/YR } \underline{\text{SLUDGE}}$$

0 = VOLATIZED

W.W. TREATMENT EVAP (CONT.) LAKE CHARLES ⑨

1,1 DICHLOROETHYLENE (N.D.) EPC

$$\frac{36.6}{.05} \times .76 = 556.3 \text{ LB/YR VOLATIZED}$$

STYRENE (N.D.) $\frac{36.6}{.10} \times .23 = 84.2$ LB/YR VOLATIZED

* (N.D.) – NOT DETECTED, 10 PPB ASSUMED AS DETECTION LIMIT. HALF OF DETECTION LIMIT WAS ASSUMED PER EPA RELEASE CALC. DOC.

SAL 000005529

Conoco Inc.
Calculation Sheet

Made By		Job No.	
Checked By			
Date	Title	Field	
Page of		State	

The data for Table A-2 were extracted from "Report to Congress on the Discharge of Hazardous Waste to Publicly Owned Treatment Works", U.S. Environmental Protection Agency, EPA/530-SW-86-004, 1986. The following notes apply to this table:

- The data from this table apply only to secondary biological wastewater treatment plants receiving low concentrations (≤ 500 ppb) of the compounds listed. A number of design and operational factors will affect the fate of these compounds in any given treatment plant. These numbers are useful only as rough approximations of pollutant fate.

- All percentages are based on influent loading. The original reference provided removals for volatilization and sludge partitioning as a percentage of overall removal. This data was translated to removals based on influent loading by assuming that all material not volatilized, transferred to sludge, or passed through untreated was biodegraded.

- (Percent volatilized to air) + (percent partitioned to sludge) + (percent biodegraded) + (100 - overall percent removal) = 100.

- Percent biodegraded was determined by difference in the preceding equation.

- The percentage which is discharged to receiving waters equals 100 minus the "overall percent removal" (percent discharged to receiving wastes = 100 - overall percent removal).

- (Percent volatilized to air) + (percent partitioned to sludge) + (percent biodegrded) + (percent discharged to receiving waters) = 100.

- "Acclimated" represents those processes which receive a relatively steady amount of the pollutant in question, such that biodegradtion rates stabilize. "Unacclimated, Median and Low" refer to processes which receive unsteady or "slug" loadings of the pollutant in question.

SAL 000005530

TABLE A-2. FATE OF HAZARDOUS A. R TOXIC POLLUTANTS AT LOW CONCENTRATIONS IN SECONDARY, BIOLOGICAL WASTEWATER TREATMENT PLANTS

	OVERALL PERCENT REMOVAL			PERCENT VOLATILIZED TO AIR			PERCENT PARTITIONED TO SLUDGE			PERCENT BIODEGRADED		
POLLUTANT	ACCLIMATED	UNACCLIMATED MEDIAN	UNACCLIMATED LOW	ACCLIMATED	UNACCLIMATED MEDIAN	UNACCLIMATED LOW	ACCLIMATED	UNACCLIMATED MEDIAN	UNACCLIMATED LOW	ACCLIMATED	UNACCLIMATED MEDIAN	UNACCLIMATED LOW
	%	%	%	%	%	%	%	%	%	%	%	%
2,4-D	90	60	50	0	0	0	7	5	4	83	55	46
ACENAPHTHYLENE	95	90	90	19	54	54	9	8	8	67	28	28
ACETALDEHYDE	95	95	95	0	5	5	10	10	10	85	81	81
ACETONE	95	50	30	0	3	2	10	5	3	85	43	26
ACROLEIN	95	95	95	0	5	5	10	10	10	85	81	81
ACRYLAMIDE	90	62	50	0	0	0	9	6	5	81	56	45
ACRYLIC ACID	90	85	80	0	0	0	9	9	8	81	77	72
ACRYLONITRILE	90	75	70	0	4	4	9	8	7	81	64	60
ALDRIN	90	90	90	0	0	0	33	33	33	57	57	57
ANILINE	95	85	80	0	0	0	10	9	8	86	77	72
ANTHRACENE	95	90	90	0	0	0	52	50	50	43	41	41
ANTIMONY	60	60	60	0	0	0	60	60	60	0	0	0
ARSENIC	50	50	50	0	0	0	50	50	50	0	0	0
BARIUM	90	90	90	0	0	0	90	90	90	0	0	0
BENZAL CHLORIDE	90	55	50	0	17	15	7	4	4	83	34	31
BENZENE	95	90	90	24	72	72	2	2	2	69	16	16
BENZOTRICHLORIDE	90	45	40	18	14	12	7	4	3	65	28	25
BENZYL CHLORIDE	90	90	90	23	45	45	7	7	7	60	38	38
BIS-2-CHLOROETHYL ETHER	90	50	30	0	3	2	9	5	3	81	43	26
BIS-2-ETHYLHEXYL PHTHALATE	90	90	90	0	0	0	66	66	66	24	24	24
BROMOMETHANE	95	95	95	86	90	90	0	0	0	10	5	5
BUTYL BENZYL PHTHALATE	95	90	90	0	0	0	43	41	41	52	50	50
CADMIUM	27	27	27	0	0	0	27	27	27	0	0	0
CAPTAN	90	50	30	0	0	0	7	4	2	83	46	28
CARBON DISULFIDE	95	85	80	76	77	72	1	1	1	18	8	7
CARBON TETRACHLORIDE	90	85	80	72	77	72	12	9	8	6	0	0
CHLORDANE	90	90	90	9	9	9	33	33	33	48	48	48
CHLOROBENZENE	90	90	90	27	45	45	14	14	14	50	32	32
CHLOROBENZILATE	90	60	50	9	6	5	7	5	4	74	49	41
CHLOROETHANE	95	90	90	76	81	81	1	1	1	18	8	8
CHLOROFORM	90	80	80	63	72	72	2	2	2	25	6	6
CHLOROMETHANE	95	90	90	86	86	86	1	1	1	9	4	4

(continued)

SAL 000005531

TABLE A-2 (continued)

POLLUTANT	OVERALL PERCENT REMOVAL			PERCENT VOLATILIZED TO AIR			PERCENT PARTITIONED TO SLUDGE			PERCENT BIODEGRADED		
	ACCLIMATED	UNACCLIMATED		ACCLIMATED	UNACCLIMATED		ACCLIMATED	UNACCLIMATED		ACCLIMATED	UNACCLIMATED	
		MEDIAN	LOW		MEDIAN	LOW		MEDIAN	LOW		MEDIAN	LOW
	%	%	%	%	%	%	%	%	%	%	%	%
2-CHLOROPHENOL	95	65	60	0	0	0	8	5	5	87	60	55
CHROMIUM	70	70	70	0	0	0	70	70	70	0	0	0
CRESOLS	95	50	40	0	0	0	8	4	3	87	46	37
CUMENE	95	95	95	38	57	57	4	4	4	53	34	34
CYANIDE	60	60	60	0	3	3	57	57	57	3	0	0
CYCLOHEXANE	95	95	95	10	86	86	4	4	4	82	6	6
DI-N-BUTYL PHTHALATE	90	90	90	0	0	0	20	20	20	70	70	70
DI-N-OCTYL PHTHALATE	90	90	90	0	0	0	7	7	7	83	83	83
DIBROMOMETHANE	85	80	80	43	64	64	13	12	12	30	4	4
1,2-DICHLOROBENZENE	90	87	85	45	78	77	32	9	9	14	0	0
1,3-DICHLOROBENZENE	90	87	85	45	78	77	3	3	3	42	6	6
1,4-DICHLOROBENZENE	90	87	85	45	78	77	23	9	9	23	0	0
1,2-DICHLOROETHANE	90	50	30	45	45	27	5	3	2	41	3	2
1,1-DICHLOROETHYLENE	95	90	90	76	81	81	0	0	0	19	9	9
2,4-DICHLOROPHENOL	95	55	50	0	0	0	8	4	4	87	51	46
1,2-DICHLOROPROPANE	90	70	70	45	63	63	0	0	0	45	7	7
DICHLORVOS	90	50	30	0	0	0	9	5	3	81	45	27
DICOFOL	90	90	90	45	45	45	8	8	8	37	37	37
DIETHYL PHTHALATE	90	75	70	0	0	0	1	1	1	89	74	69
3,3-DIMETHOXY BENZIDINE	80	30	20	0	0	0	8	3	2	72	27	18
2,4-DIMETHYL PHENOL	95	85	80	0	0	0	8	7	6	87	78	74
DIMETHYL PHTHALATE	95	65	60	0	0	0	0	0	0	95	65	60
2,4-DINITROPHENOL	90	75	70	0	0	0	9	8	7	81	68	83
1,4-DIOXANE	90	50	40	0	0	0	9	5	4	81	45	36
EPICHLOROHYDRIN	87	59	25	0	0	0	9	6	3	78	53	23
ETHYL BENZENE	95	90	90	24	72	72	6	5	5	66	13	13
ETHYLENE OXIDE	90	50	40	0	3	2	9	5	4	81	43	34
ETHYLENE THIOUREA	85	67	60	0	0	0	9	7	6	77	60	54
FORMALDEHYDE	85	85	80	0	4	4	9	9	8	76	72	68
HEXACHLORO-1,3-BUTADIENE	95	90	90	0	5	5	9	8	8	86	77	77
HEXACHLOROETHANE	95	90	90	0	5	5	9	8	8	86	77	77
HYDRAZINE	95	85	80	0	4	4	10	9	8	85	72	68

(continued)

SAL 00005532

TABLE A-2 (continued)

POLLUTANT	OVERALL PERCENT REMOVAL			PERCENT VOLATILIZED TO AIR			PERCENT PARTITIONED TO SLUDGE			PERCENT BIODEGRADED		
	ACCLIMATED	UNACCLIMATED		ACCLIMATED	UNACCLIMATED		ACCLIMATED	UNACCLIMATED		ACCLIMATED	UNACCLIMATED	
		MEDIAN	LOW		MEDIAN	LOW		MEDIAN	LOW		MEDIAN	LOW
	%	%	%	%	%	%	%	%	%	%	%	%
LEAD	70	70	70	0	0	0	70	70	70	0	0	0
MALEIC HYDRAZIDE	90	75	70	0	0	0	9	8	7	81	68	63
MERCURY	50	50	50	0	3	3	48	48	48	2	0	0
METHANOL	100	95	95	1	5	5	10	10	10	90	81	81
METHOXYCHLOR	90	90	90	54	54	54	8	8	8	28	28	28
METHYL ETHYL KETONE	95	50	30	0	3	2	10	5	3	85	43	26
METHYL ISOBUTYL KETONE	90	50	30	0	0	0	9	5	3	81	45	27
METHYLENE CHLORIDE	95	87	85	38	52	51	13	12	12	44	23	22
N-BUTYL ALCOHOL	95	90	90	0	0	0	10	9	9	86	81	81
N-NITROSODIMETHYL AMINE	90	75	70	0	0	0	9	8	7	81	68	63
NAPHTHALENE	95	75	70	0	4	4	27	21	20	68	50	47
NICKEL	35	35	35	0	0	0	35	35	35	0	0	0
NITROBENZENE	90	25	20	0	0	0	9	3	2	81	23	18
2-NITROPROPANE	95	95	95	86	90	90	1	1	1	9	4	4
P-BENZOQUINONE	95	50	40	0	0	0	8	4	3	87	46	37
PARATHION	0	55	40	0	0	0	0	4	3	0	51	37
PCB	92	92	92	9	9	9	22	22	22	61	61	61
PENTACHLOROPHENOL	95	25	20	0	0	0	17	5	4	78	21	16
PHENOL	95	85	80	0	0	0	14	13	12	81	72	68
PHENYLENE DIAMINE	90	75	70	0	0	0	9	8	7	81	68	63
PHOSGENE	100	100	100	1	5	5	10	10	10	90	85	85
PHTHALIC ANHYDRIDE	90	90	90	0	0	0	9	9	9	81	81	81
PYRIDINE	15	15	10	0	1	1	2	2	1	13	13	9
SELENIUM	50	50	50	0	0	0	50	50	50	0	0	0
SILVER	90	90	90	0	0	0	90	90	90	0	0	0
STYRENE	90	90	90	23	72	72	14	14	14	54	5	5
1,1,2,2-TETRACHLOROETHANE	90	25	20	36	15	12	4	1	1	50	9	7
TETRACHLOROETHYLENE	90	85	80	45	68	64	3	3	2	42	14	14
THIOUREA	90	75	70	0	0	0	9	8	7	81	68	63
TOLUENE	90	90	90	23	72	72	25	18	18	42	0	0
TOLUENE DIAMINE	90	75	70	0	0	0	9	8	7	81	68	63
TOXAPHENE	95	90	90	57	72	72	4	4	4	34	14	14

(continued)

SAL 00005533

TABLE V

WATER ANALYSIS
LAKE CHARLES REFINERY

Sample	Dissolved Metal Concentration (mg/L)											
	Ag	Al	As	Ba	Be	Ca	Cd	Cr	Cu	Fe	Hg	Mg
REF-87 Blank	<.03	<.15	<.002	<.005	<.01	<.050	<.015	<.030	<.015	<.030	<.013	<.10
REF-88 Pump Blank	<.03	<.15	<.002	<.005	<.01	<.050	<.015	<.030	<.015	<.030	<.013	<.10
REF-89 Composite	<.03	1.3	<.002	.23	<.01	49	<.015	.098	<.015	.60	<.013	16
REF-90 Effluent (3/4/79)	<.03	1.1	<.002	.22	<.01	49	<.015	.087	<.015	.48	<.013	16
REF-101 Effluent (3/5/79)	<.03	1.3	<.002	.23	<.01	49	<.015	.16	<.015	.77	<.013	15
REF-92 Influent (3/5/79)	<.03	<.15	<.002	.17	<.01	24	<.015	<.030	<.015	5.1	<.013	6.3
REF-93 Influent (3/5/79)	<.03	<.15	<.002	.17	<.01	24	<.015	<.030	<.015	5.4	<.013	6.3

	Mn	Mo	Na	Ni	Pb	Sb	Se	Sn	Tl	V	Zn
REF-87 Blank	<.010	<.050	<.10	<.075	<.25	<.2	<.002	<.10	<.50	<.025	<.025
REF-88 Pump Blank	<.010	<.050	<.10	<.075	<.25	<.2	<.002	<.10	<.50	<.025	<.025
REF-89 Composite	.30	<.050	350	<.075	<.25	<.2	.002	<.10	<.50	<.025	<.025
REF-90 Effluent (3/4/79)	.29	<.050	340	<.075	<.25	<.2	<.002	<.10	<.50	<.025	<.025
REF-101 Effluent (3/5/79)	.30	<.050	340	<.075	<.25	.2	<.002	<.10	<.50	<.025	<.025
REF-92 Influent (3/5/79)	.30	<.050	38	<.075	<.25	<.2	<.002	<.10	<.50	<.025	<.025
REF-93 Influent (3/5/79)	.31	<.050	39	<.075	<.25	<.2	<.002	<.10	<.50	<.025	<.025

1) Hg, As, Se (MHS-1 Analyses)
2) Ag, Be, Sb (Atomic Absorption Analyses)
3) All Others (ICAP Analyses)

SAL 0000534

TABLE VI

WATER ANALYSIS
LAKE CHARLES REFINERY

Sample	Total Metal Concentration (mg/L)										
	Ag[2]	Al	As[1]	Ba	Be[2]	Ca	Cd	Cr	Cu	Fe	Mg
REF-87 Blank	<.03	<.15	.006	<.005	<.01	.40	<.015	<.030	<.015	.046	<.10
REF-88 Pump Blank	<.03	<.15	.005	<.005	<.01	.22	<.015	<.030	.031	.052	<.10
REF-89 Composite	<.03	1.3	<.002	.23	<.01	46	<.015	.14	0.28	.58	15
REF-90 Effluent (3/4/79)	<.03	1.2	<.002	.22	<.01	46	<.015	.12	<.015	.50	15
REF-101 Effluent (3/5/79)	<.03	1.8	<.002	.24	<.01	51	<.015	.21	<.015	.75	16
REF-92 Influent (3/5/79)	<.03	<.15	<.002	.18	<.01	24	<.015	<.030	<.015	4.4	6.1
REF-93 Influent (3/5/79)	<.03	.16	<.002	.18	<.01	26	<.015	<.030	<.015	4.6	6.1

	Mn	Mo	Na	Ni	Pb	Sb[2]	Se[1]	Sn	Tl	V	Zn
REF-87 Blank	<.010	<.050	2.7	<.075	<.25	<.2	<.002	<.10	<.50	<.025	.030
REF-88 Pump Blank	<.010	<.050	1.9	<.075	<.25	<.2	<.002	<.10	<.50	<.025	.042
REF-89 Composite	.30	<.050	320	<.075	<.25	<.2	.003	<.10	<.50	<.025	.080
REF-90 Effluent (3/4/79)	.30	<.050	310	<.075	<.25	<.2	.002	<.10	<.50	<.025	.097
REF-101 Effluent (3/5/79)	.32	<.050	340	<.075	<.25	<.2	.003	<.10	<.50	<.025	.10
REF-92 Influent (3/5/79)	.34	<.050	33	<.075	<.25	<.2	<.002	<.10	<.50	<.025	<.025
REF-93 Influent (3/5/79)	.33	<.050	37	<.075	<.25	<.2	<.002	<.10	<.50	<.025	<.025

1) As, Se (MHS-1 Analyses)
2) Ag, Be, Sb (Atomic Absorption Analyses)
3) All Others (ICAP Analyses)

SAL 000005535

TABLE B'
Ref: TSR 242-79-350-2

WATER ANALYSIS

LAKE CHARLES REFINERY (REF)
SUMMARY GC/MS DATA

SAMPLE NO. REF- COMPONENT	82-92 Influent	82-89-1 Effluent
Butyl-capped nonionic		1306 ppb
di-2-Ethylhexylphthalate	1 ppb	
Possible amino acid		25 ppb
Tridecane		10 ppb
Tetradecane		21 ppb
Branched paraffin		41 ppb
Pentadecane		24 ppb
Diethylphthalate		7 ppb
Hexadecane		25 ppb
Heptadecane		24 ppb
Pristane		25 ppb
Biphenylcarbaldehyde		10 ppb
Octadecane		21 ppb
Dibutylphthalate		4 ppb
Nonodecane		23 ppb
Eicosane		19 ppb
Fluoranthene		1 ppb
Heneicosane		14 ppb
Trimethylphenanthrene		12 ppb
Docosane		14 ppb
Methylpyrene		10 ppb
Terphenyl		26 ppb
Tricosane		12 ppb
Tetracosane		11 ppb
Chrysene		16 ppb
Pentacosane		14 ppb
Dioctylphthalate		4 ppb
Methylbenzanthracene		18 ppb
Hexacosane		10 ppb
Heptacosane		8 ppb
Benzopyrene		7 ppb
Benzofluoranthrene		12 ppb
Carbon dioxide		200 ppb
Branched C_6 olefin		10 ppb
Hexane		210 ppb
Phenol		10 ppb

TABL

WATER ANALYSIS

LAKE CHARLES REFINERY (REF)
GC/MS DATA

SAMPLE NO. REF- / COMPONENT	82-88-BN Blank Water Base Neutrals	82-88-AC Blank Water Acid Fraction	82-92-BN Influent Base Neutrals	82-92-AC Influent Acid Fraction	82-89-1-BN Effluent Base Neutrals	82-89-1-AC Effluent Acid Fraction	82-95-VOA Volatile Organic Analysis
Butyl-capped nonionic	300 ppb	Nothing	Nothing		1506 ppb	100 ppb	
Isooctanol	30 ppb	Significant	Significant				
Isodecanol	10 ppb						
di-2-Ethylhexylphthalate				1 ppb			
Possible amino acid					25 ppb		
Tridecane					10 ppb		
Tetradecane					21 ppb		
Branched paraffin					41 ppb		
Pentadecane					24 ppb		
Diethylphthalate					7 ppb		
Hexadecane					25 ppb		
Heptadecane					24 ppb		
Pristane					25 ppb		
Biphenylcarbaldehyde					10 ppb		
Octadecane					21 ppb		
Dibutylphthalate					4 ppb		
Nonodecane					23 ppb		
Eicosane					19 ppb		
F[illegible]nthene					1 ppb		
E[illegible]sane					14 ppb		
Tr[illegible]hylphenanthrene					12 ppb		
Docosane					14 ppb		
Methylpyrene					10 ppb		
Terphenyl					26 ppb		
Tricosane					12 ppb		
Tetracosane					11 ppb		
Chrysene					16 ppb		
Pentacosane					14 ppb		
Dioctylphthalate					4 ppb		
Methylbenzanthracene					18 ppb		
Hexacosane					10 ppb		
Heptacosane					8 ppb		
Benzopyrene					7 ppb		
Benzofluoranthrene					12 ppb		
Carbon dioxide							200 ppb
Branched C_6 olefin							10 ppb
Hexane							210 ppb
Phenol							10 ppb

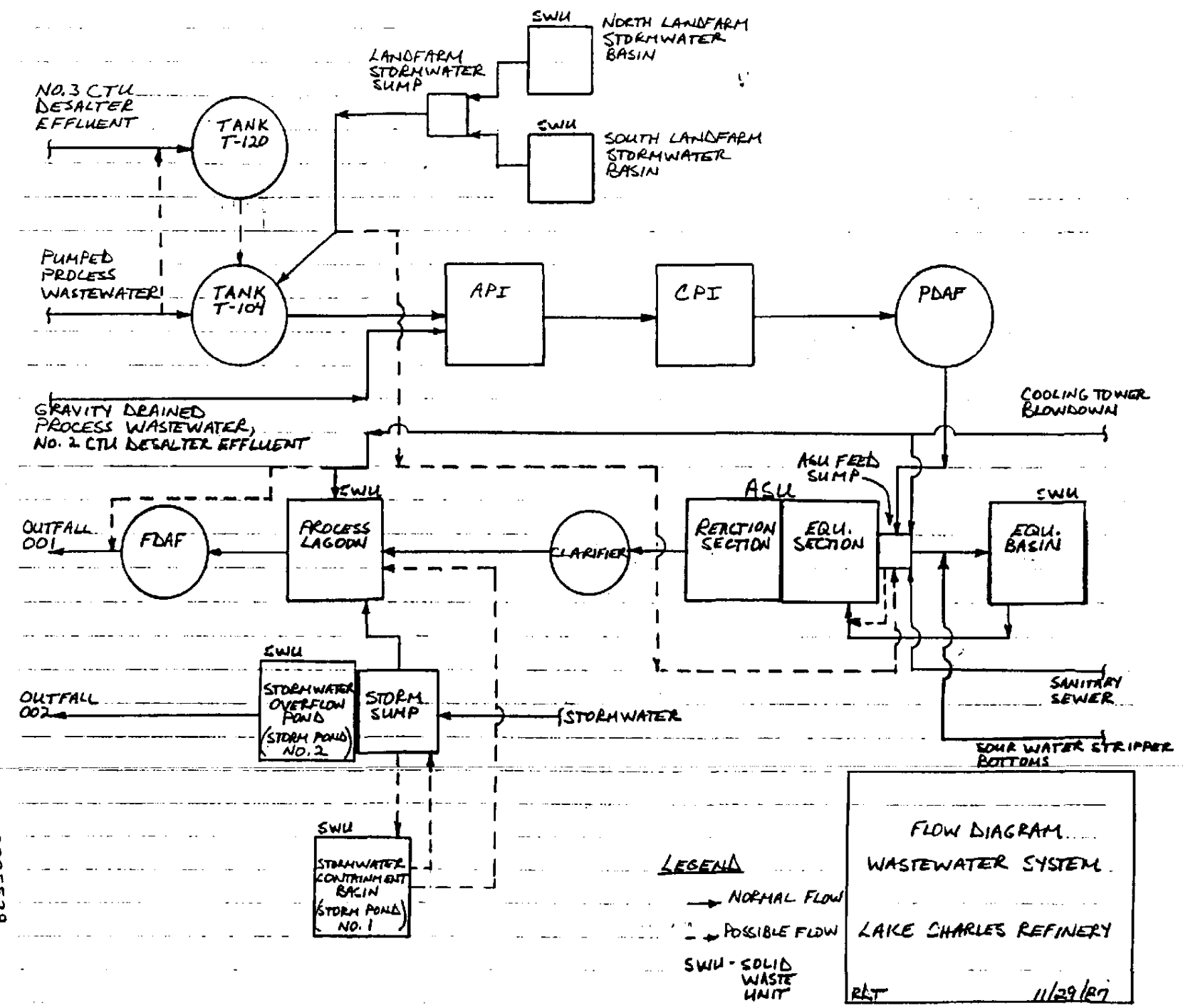

SAL 000005538

TOTAL RELEASE SUMMARY - API SEPARATOR / DAF - IAF
LBS/YR

BENZENE	-	175
CYCLOHEXANE	-	336
TOLUENE	-	86
ETHYLBENZENE	-	18
M XYLENE, O XYLENE, P XYLENE	-	52
CUMENE	-	4
PSEUDOCUMENE	-	2
STYRENE	-	3
NAPHTHALENE	-	0.2

SAL 000005539

API SEPARATOR — LAKE CHARLES

750 GPM – PER BRANDT BUTLER

(ASSUME CRUDE COMPOSITION; VAPOR PRESSURE CORRECTION); (AP-42 FACTOR - COVERED = 0.2 LB/1000 GAL W.W)

$$750 \frac{GAL}{MIN} \times 60 \frac{MIN}{HR} \times 24 \frac{HR}{DAY} \times 365 \frac{DAY}{YR} \times \frac{0.2\ LB}{1000\ GAL} \times \frac{1\ TON}{2000\ LB} = 39.42\ TPY\ VOC$$

VOC × WT. % × VAPOR CORRECTION FACTOR × 2000 LB = LB/YR

BENZENE $= 39.42 \times \frac{.36}{100} \times \frac{1.5}{3.4} \times 2000 = 125.2$ LB/YR

CYCLOHEXANE $= 39.42 \times \frac{.76}{100} \times \frac{1.6}{3.4} \times 2000 = 282$ LB/YR

TOLUENE $= 39.42 \times \frac{.79}{100} \times \frac{0.4}{3.4} \times 2000 = 73$ LB/YR

ETHYL BENZENE $= 39.42 \times \frac{.29}{100} \times \frac{0.18}{3.4} \times 2000 = 12$ LB/YR

M-XYLENE $= 39.42 \times \frac{.47}{100} \times \frac{.19}{3.4} \times 2000 = 21$ LB/YR

P-XYLENE $= 39.42 \times \frac{.27}{100} \times \frac{.19}{3.4} \times 2000 = 12$ LB/YR

O-XYLENE $= 39.42 \times \frac{.29}{100} \times \frac{.19}{3.4} \times 2000 = 13$ LB/YR

CUMENE $= 39.42 \times \frac{.17}{100} \times \frac{.0619}{3.4} \times 2000 = 24$ LB/YR

PSEUDOCUMENE $= 39.42 \times \frac{.12}{100} \times \frac{.0393}{3.4} \times 2000 = 1.1$ LB/YR

INPOUNDMENTS

LAKE CHARLES

HAZARDOUS WASTE BASIN - INORGANIC WASTES ONLY
(PER B. BUTLER)
- ORGANIC WASTES LANDFARMED
- NO OTHER IMPOUNDMENTS
- THIS WASTE TO BE REMOVED, SO NO RELEASE TO LAND EITHER.

SAL 000005541

Conoco Inc.
Calculation Sheet

Made By
Checked By
Date
Page of
Title
Job No.
Field
State

: CUMENE, PSEUDO CUMENE & STYRENE COMP. DATA MONDAY

NAPHTHALENE AND BIPHENYL DATA

STREAM	COMPOSITION, WT % NAPHTHALENE	BIPHENYL
JET FUEL - (JET 50)	3	<1
N° 2 DIESEL	3	<1
CRUDE CONDENSATE	1	<1
KEROSENE	3	<1
HEAVY FCC GASOLINE	1	1

CRUDE COMPOSITIONAL DATA

NOTE: USE THIS FOR PROCESS DRAINS

	WT %
BENZENE	~~0.36~~ → 0.1 for PONCA CITY & BILLINGS
CYCLOHEXANE	0.76
TOLUENE	0.79
ETHYL BENZENE	0.29
M-XYLENE	0.47
P-XYLENE	0.27
O-XYLENE	0.29
* CUMENE	0.17
* PSEUDO-CUMENE	0.12
NAPHTHALENE	0.01 +
STYRENE	0.05 +
BIPHENYL	NOT TESTED; NEGLIGIBLE

SAL 000005542

* THESE ARE FROM A CRUDE MIXTURE BUT SHOULD BE CLOSE. NO DATA ON NAPHTHALENE & BIPHENYL. MAY ASSUME SOMETHING LATER. MUST CHECK THESE WITH TSL.

+ FROM PC WASTE ANALYSIS FOR DENVER API SLOP OIL.

VAPOR PRESSURES, PSIA

BENZENE	1.5
TOLUENE	0.4
ETHYL BENZENE	0.18
CYCLOHEXANE	1.6
XYLENES-	0.19
STYRENE	0.0967
CUMENE	0.0619
PSEUDO CUMENE	0.0393
NAPHTHALENE	0.0045
BIPHENYL	0.0193
CRUDE	3.4
GASOLINE	6.2
KEROSENE	0.011
DIESEL	0.009
NAPHTHA - JP-4	1.6

SAL 000005543

Conoco Inc.
Calculation Sheet

Made By
Checked By
Date
Page
Title
Job No.
Field
State

DAF

LAKE CHARLES

DAF = 600 GPM $\frac{.01 \text{ LBS}}{10^3 \text{ GAL}}$

$600 \times \frac{1}{7.48} \times 62.4 \times 60 \times 24 \times 365 \times \frac{.01}{10^3} \times \frac{1}{2000} = 13.2$ TONS VOC

VOC × WT. % CRUDE × V.P. CORRECTION × 2000 = LBS/YR.

BENZENE = $13.2 \times .003 \times \frac{1.5}{3.4} \times 2000$ = 34.9 LBS/YR

CYCLOHEXANE = $13.2 \times .003 \times \frac{1.6}{3.4} \times 2000$ = 37.3 LBS/YR

ETHYLBENZENE = $13.2 \times .003 \times \frac{.18}{3.4} \times 2000$ = 4.2 LBS/YR

TOLUENE = $13.2 \times .003 \times \frac{.4}{3.4} \times 2000$ = 9.3 LBS/YR

XYLENES = $13.2 \times .003 \times \frac{.19}{3.4} \times 2000$ = 4.4 LBS/YR

STYRENE = $13.2 \times .003 \times \frac{.0967}{3.4} \times 2000$ = 2.3 LBS/YR

NAPHTHALENE = $13.2 \times .003 \times \frac{.0045}{3.4} \times 2000$ = 0.1 LBS/YR

CUMENE = $13.2 \times .003 \times \frac{.0619}{3.4} \times 2000$ = 1.4 LBS/YR

PSEUDOCUMENE = $13.2 \times .003 \times \frac{.0393}{3.4} \times 2000$ = 0.9 LBS/YR

SAL 000005544

Conoco Inc.
Calculation Sheet

Made By			Job No.
Checked By			
Date	Title		Field
Page	of		State

IAF

LAKE CHARLES

IAF = 8.0 GPM $\frac{.0370}{10^3 GAL}$ 50% OF YR

$80 \times \frac{1}{2.48} \times 62.4 \times 60 \times 24 \times 365 \times \frac{.037}{10^3} \times \frac{1}{2000} = 5.79$ TONS VOC

VOC × WT % CRUDE × V.P. CORRECTION × 2000 = LBS/YR

BENZENE $= 5.79 \times .003 \times \frac{1.5}{3.4} \times 2000 = 15.3$ LBS/YR

CYCLOHEXANE $= 5.79 \times .003 \times \frac{1.6}{3.4} \times 2000 = 16.3$ LBS/YR

ETHYLBENZENE $= 5.79 \times .003 \times \frac{.18}{3.4} \times 2000 = 1.8$ LBS/YR

TOLUENE $= 5.79 \times .003 \times \frac{.4}{3.4} \times 2000 = 4.1$ LBS/YR

XYLENES $= 5.79 \times .003 \times \frac{.19}{3.4} \times 2000 = 1.9$ LBS/YR

STYRENE $= 5.79 \times .003 \times \frac{.0967}{3.4} \times 2000 = 1.0$ LBS/YR

NAPHTHALENE $= 5.79 \times .003 \times \frac{.0045}{3.4} \times 2000 = 0.1$ LBS/YR

CUMENE $= 5.79 \times .003 \times \frac{.0619}{3.4} \times 2000 = 0.6$ LBS/YR

PSEUDOCUMENE $= 5.79 \times .003 \times \frac{.0393}{3.4} \times 2000 = 0.4$ LBS/YR

SAL 000005545

Conoco Inc.
Calculation Sheet

Made By
Checked By
Date
Page of
Title
Job No.
Field
State

TOWER CALC

LAKE CHARLES

COOLING TOWER

TOTAL CRUDE = 49827.7 MBBL

$$49827.7 \times \frac{1.2\ LB}{MBBL} = 29.90\ \frac{TONS}{YR}$$

BENZENE = 29.9 x .0036 = .108 TPY	216	LBS/YR
Cyclohexane = 29.9 x .0076 = .23 TPY	460	
Toluene = 29.9 x .0079 = .24	480	
Ethyl Benzene = 29.9 x .0029 = .087	174	
M-Xylene = 29.9 x .0047 = .14	280	
P-Xylene = 29.9 x .0027 = .081	162	
O-Xylene = 29.9 x .0029 = .087	174	
CUMENE = 29.9 x .0017 = .051	102	
PSEUDO CUMENE = 29.9 x .0012 = .036	72	
NAPHTHALENE = 29.9 x .0001 = .003	6	
STYRENE = 29.9 x .0005 = .015	30	
BIPHENYL = 29.9 —	NO DATA	

SAL 000005546

Conoco Inc.
Calculation Sheet

Made By
Checked By
Date
Page of

Title

Job No.
Field
State

LC

APPENDIX H

1987 EMISSIONS INVENTORY

STORAGE TANK VOC

SAL 000005547

Conoco Inc.
Calculation Sheet

Made By
Checked By
Date
Page of

Title

Job No.
Field
State

Fixed Roof Tanks- 1981

PRODUCT NAME	TANK NO.	CAP. MBBLS	DIAM. FT	TURN OVERS PER YEAR	VAPOR PRESS PSIA	VAPOR MOL. WT.	VAPOR SPACE FT	PAINT FACTOR	SIZE FACTOR	TURNOVER FACTOR	BREATHING LOSS TPY	WORKING LOSS TPY	TOTAL LOSS TPY
REFORMER FEED	193	80.0	120.0	1.5	1.3000	68.0	19.9	1.00	1.00	1.00	12.55	5.35	17.90
REFORMER FEED	68	55.0	100.0	4.1	1.3000	68.0	19.7	1.00	1.00	1.00	9.11	10.05	19.16
REFORMER FEED	69	55.0	100.0	4.1	1.3000	68.0	19.7	1.00	1.00	1.00	9.11	10.05	19.16
CRACKED DIST	21	25.0	67.0	5.0	0.0150	68.0	19.9	1.00	1.00	1.00	0.21	0.06	0.27
[redacted]	94	2.5	25.0	10.3	0.0150	130.0	14.3	1.00	0.97	1.00	0.06	0.03	0.08
[redacted]	95	2.5	25.0	10.3	0.0150	130.0	14.3	1.00	0.97	1.00	0.06	0.03	0.08
[redacted]	35	80.0	120.0	10.3	0.0150	130.0	19.9	1.00	1.00	1.00	1.09	0.81	1.89
# 2 DISTILLATE	81	120.0	134.0	28.6	0.0120	130.0	23.9	1.00	1.00	1.00	1.24	2.70	3.94
# 2 DISTILLATE	82	150.0	150.0	10.3	0.0120	130.0	23.8	1.00	1.00	1.00	1.50	1.21	2.72
# 2 DISTILLATE	201	25.0	67.0	467.8	0.0120	130.0	19.9	1.00	1.00	1.00	0.34	9.20	9.54
# 2 DISTILLATE	202	15.0	60.0	467.8	0.0120	130.0	14.9	1.00	1.00	1.00	0.24	5.52	5.76
# 2 DISTILLATE	343	80.0	120.0	3.8	0.0120	130.0	19.9	1.00	1.00	1.00	0.93	0.24	1.17
# 2 DISTILLATE	351	80.0	120.0	3.8	0.0120	130.0	19.9	1.00	1.00	1.00	0.93	0.24	1.17
# 2 DISTILLATE	370	80.0	120.0	3.8	0.0120	130.0	19.9	1.00	1.00	1.00	0.93	0.24	1.17
# 2 DISTILLATE	74	150.0	150.0	29.8	0.0120	130.0	23.8	1.00	1.00	1.00	1.50	3.51	5.02
# 2 DISTILLATE	75	150.0	150.0	29.8	0.0120	130.0	23.8	1.00	1.00	1.00	1.50	3.51	5.02
# 2 DISTILLATE	76	150.0	150.0	29.8	0.0120	130.0	23.8	1.00	1.00	1.00	1.50	3.51	5.02
# 2 DISTILLATE	378	80.0	120.0	3.8	0.0120	130.0	19.9	1.00	1.00	1.00	0.93	0.24	1.17
# 2 DISTILLATE	22	25.0	67.0	108.3	0.0120	130.0	19.9	1.00	1.00	1.00	0.34	2.13	2.47
OP FDSTK	344	80.0	120.0	19.9	0.0120	130.0	19.9	1.00	1.00	0.95	0.93	1.19	2.12
OP FDSTK	345	150.0	150.0	0.0	0.0120	130.0	23.8	1.00	1.00	0.95	1.50	0.00	1.50
LT. FEEDSTOCK	342	80.0	120.0	4.9	0.0120	130.0	19.9	1.00	1.00	0.60	0.93	0.18	1.12
LT. FEEDSTOCK	340	80.0	120.0	4.9	0.0120	130.0	19.9	1.46	1.00	0.60	1.36	0.18	1.55
HVY. FEEDSTOCK	297	80.0	117.0	4.9	0.0120	130.0	20.9	1.46	1.00	0.85	1.34	0.26	1.60
HVY. FEEDSTOCK	338	80.0	117.0	8.5	0.0120	130.0	20.9	1.46	1.00	0.85	1.34	0.45	1.79
GAS OIL	36	80.0	120.0	26.6	0.0001	190.0	19.9	1.46	1.00	1.00	0.00	0.02	0.10
GAS OIL	37	80.0	120.0	28.6	0.0001	190.0	19.9	1.46	1.00	1.00	0.00	0.02	0.10
GAS OIL	83	120.0	134.0	8.5	0.0001	190.0	23.9	1.46	1.00	1.00	0.10	0.01	0.11
GAS OIL	100	150.0	150.0	28.6	0.0001	190.0	23.8	1.00	1.00	1.00	0.00	0.04	0.13
GAS OIL	101	150.0	150.0	28.6	0.0001	190.0	23.8	1.00	1.00	1.00	0.00	0.04	0.13
SLURRY	71	25.0	67.0	5.0	0.0001	190.0	19.9	1.46	1.00	1.00	0.03	0.00	0.03
SLURRY	72	25.0	67.0	5.0	0.0001	190.0	19.9	1.46	1.00	1.00	0.03	0.00	0.03
SLURRY	73	25.0	67.0	4.7	0.0001	190.0	19.9	1.00	1.00	1.00	0.02	0.00	0.02
SLURRY	299	80.0	117.0	5.0	0.0001	190.0	20.9	1.00	1.00	1.00	0.05	0.00	0.06
SLURRY	308	80.0	117.0	5.0	0.0001	190.0	20.9	1.00	1.00	1.00	0.05	0.00	0.06
COKER FEED	67	55.0	100.0	13.6	0.0001	190.0	19.7	1.46	1.00	1.00	0.06	0.01	0.06
COKER FEED	91	80.0	120.0	1.8	0.0001	190.0	19.9	1.46	1.00	1.00	0.08	0.00	0.08
COKER FEED	20	25.0	67.0	13.6	0.0001	190.0	19.9	1.00	1.00	1.00	0.02	0.00	0.02
COKER FEED	66	55.0	100.0	6.3	0.0001	190.0	19.7	1.46	1.00	1.00	0.06	0.00	0.06
COKER FEED	90	80.0	120.0	13.6	0.0001	190.0	19.9	1.46	1.00	1.00	0.08	0.01	0.09
COKER FEED	400	25.0	78.0	15.5	0.0001	190.0	14.7	1.00	1.00	1.00	0.02	0.00	0.03
COKER FEED	3801	200.0	190.0	21.4	0.0001	190.0	19.8	1.30	1.00	1.00	0.15	0.04	0.19
COKER FEED	3802	200.0	190.0	21.4	0.0001	190.0	19.8	1.30	1.00	1.00	0.15	0.04	0.19
COKER FEED	3805	200.0	190.0	1.8	0.0001	190.0	19.8	1.30	1.00	1.00	0.15	0.00	0.15
COKER GAS OIL	60	30.0	67.0	15.5	0.0001	190.0	23.9	1.00	1.00	1.00	0.02	0.00	0.03
# 6 FUEL OIL	84	150.0	150.0	8.5	0.0001	190.0	23.8	1.46	1.00	1.00	0.12	0.01	0.14
# 6 FUEL OIL	89	150.0	150.0	1.8	0.0001	190.0	23.8	1.46	1.00	1.00	0.12	0.00	0.13
# 6 FUEL OIL	355	15.0	58.0	3.8	0.0001	190.0	15.9	1.46	1.00	1.00	0.02	0.00	0.02
# 6 FUEL OIL	354	15.0	58.0	3.8	0.0001	190.0	15.9	1.46	1.00	1.00	0.02	0.00	0.02
# 6 FUEL OIL	398	90.0	120.0	8.5	0.0001	190.0	22.3	1.46	1.00	1.00	0.08	0.01	0.09
# 6 FUEL OIL	3803	200.0	190.0	21.4	0.0001	190.0	19.8	1.30	1.00	1.00	0.15	0.04	0.19
# 6 FUEL OIL	3804	200.0	190.0	21.4	0.0001	190.0	19.8	1.30	1.00	1.00	0.15	0.04	0.19
DUST OIL	NT-1	0.6	15.0	0.0	0.0002	190.0	8.0	1.46	0.75	1.00	0.00	0.00	0.00
DOCK EDC	415	50.0	100.0	0.0	1.8375	96.6	17.0	1.00	1.00	1.00	15.62	0.00	15.62
DOCK ALCOHOL	416	55.0	110.0	0.1	0.0140	145.0	16.0	1.00	1.00	1.00	0.09	0.01	0.09
DOCK ALCOHOL	672	10.0	43.0	0.2	0.0140	145.0	20.0	1.00	1.00	1.00	0.20	0.00	0.20
DOCK LAB	910	25.0	60.0	0.1	0.0002	190.0	24.0	1.00	1.00	1.00	0.03	0.00	0.03
OLEFIN	4300	0.3	11.0	0.0	0.1500	100.0	7.5	1.00	0.59	1.00	0.02	0.00	0.02
HEXANOL	4301	0.1	8.0	0.0	0.1000	100.0	5.0	1.00	0.53	1.00	0.01	0.00	0.01

SAL 00005548

ENE	95	2.5	25.0	10.3	0.0150	130.0	14.3	1.00	0.97		0.06	0.03	0.08
ROGENE	35	30.0	120.0	10.3	0.0150	130.0	13.9	1.00	1.00	1...	1.09	0.81	1.89
# 2 DISTILLATE	81	120.0	134.0	28.6	0.0120	130.0	23.9	1.00	1.00	1.00	1.24	2.70	3.94
# 2 DISTILLATE	82	150.0	150.0	10.3	0.0120	130.0	23.8	1.00	1.00	1.00	1.50	1.21	2.72
# 2 DISTILLATE	201	25.0	67.0	467.3	0.0120	130.0	19.9	1.00	1.00	1.00	0.34	9.20	9.54
# 2 DISTILLATE	202	15.0	60.0	467.8	0.0120	130.0	14.9	1.00	1.00	1.00	0.24	5.52	5.76
# 2 DISTILLATE	343	80.0	120.0	3.8	0.0120	130.0	19.9	1.00	1.00	1.00	0.93	0.24	1.17
# 2 DISTILLATE	351	80.0	120.0	3.8	0.0120	130.0	19.9	1.00	1.00	1.00	0.93	0.24	1.17
# 2 DISTILLATE	370	80.0	120.0	3.8	0.0120	130.0	19.9	1.00	1.00	1.00	0.93	0.24	1.17
# 2 DISTILLATE	74	150.0	150.0	29.8	0.0120	130.0	23.8	1.00	1.00	1.00	1.50	3.51	5.02
# 2 DISTILLATE	75	150.0	150.0	29.8	0.0120	130.0	23.8	1.00	1.00	1.00	1.50	3.51	5.02
# 2 DISTILLATE	76	150.0	150.0	29.8	0.0120	130.0	23.8	1.00	1.00	1.00	1.50	3.51	5.02
# 2 DISTILLATE	378	80.0	120.0	3.8	0.0120	130.0	19.9	1.00	1.00	1.00	0.93	0.24	1.17
# 2 DISTILLATE	22	25.0	67.0	108.3	0.0120	130.0	19.9	1.00	1.00	1.00	0.34	2.13	2.47
OP FDSTK	344	80.0	120.0	19.9	0.0120	130.0	19.9	1.00	1.00	0.95	0.93	1.19	2.12
OP FDSTK	345	150.0	150.0	0.0	0.0120	130.0	23.8	1.00	1.00	0.95	1.50	0.00	1.50
LT. FEEDSTOCK	342	80.0	120.0	4.9	0.0120	130.0	19.9	1.00	1.00	0.60	0.93	0.18	1.12
LT. FEEDSTOCK	340	80.0	120.0	4.9	0.0120	130.0	19.9	1.46	1.00	0.60	1.36	0.18	1.55
HVY. FEEDSTOCK	297	80.0	117.0	4.9	0.0120	130.0	20.9	1.46	1.00	0.85	1.34	0.26	1.60
HVY. FEEDSTOCK	338	80.0	117.0	8.5	0.0120	130.0	20.9	1.46	1.00	0.85	1.34	0.45	1.79
GAS OIL	36	80.0	120.0	26.6	0.0001	190.0	19.9	1.46	1.00	1.00	0.08	0.02	0.10
GAS OIL	37	80.0	120.0	28.6	0.0001	190.0	19.9	1.46	1.00	1.00	0.08	0.02	0.10
GAS OIL	83	120.0	134.0	8.5	0.0001	190.0	23.9	1.46	1.00	1.00	0.10	0.01	0.11
GAS OIL	100	150.0	150.0	28.6	0.0001	190.0	23.8	1.00	1.00	1.00	0.08	0.04	0.13
GAS OIL	101	150.0	150.0	28.6	0.0001	190.0	23.8	1.00	1.00	1.00	0.08	0.04	0.13
SLURRY	71	25.0	67.0	5.0	0.0001	190.0	19.9	1.46	1.00	1.00	0.03	0.00	0.03
SLURRY	72	25.0	67.0	5.0	0.0001	190.0	19.9	1.46	1.00	1.00	0.03	0.00	0.03
SLURRY	73	25.0	67.0	4.7	0.0001	190.0	19.9	1.00	1.00	1.00	0.02	0.00	0.02
SLURRY	299	80.0	117.0	5.0	0.0001	190.0	20.9	1.00	1.00	1.00	0.05	0.00	0.06
SLURRY	300	80.0	117.0	5.0	0.0001	190.0	20.9	1.00	1.00	1.00	0.05	0.00	0.06
COKER FEED	67	55.0	100.0	13.6	0.0001	190.0	19.7	1.46	1.00	1.00	0.06	0.01	0.06
COKER FEED	91	80.0	120.0	1.8	0.0001	190.0	19.9	1.46	1.00	1.00	0.08	0.00	0.08
COKER FEED	20	25.0	67.0	13.6	0.0001	190.0	19.9	1.00	1.00	1.00	0.02	0.00	0.02
COKER FEED	66	55.0	100.0	6.3	0.0001	190.0	19.7	1.46	1.00	1.00	0.06	0.00	0.06
COKER FEED	90	80.0	120.0	13.6	0.0001	190.0	19.9	1.46	1.00	1.00	0.08	0.01	0.09
COKER FEED	400	25.0	78.0	15.5	0.0001	190.0	14.7	1.00	1.00	1.00	0.02	0.00	0.03
COKER FEED	3801	200.0	190.0	21.4	0.0001	190.0	19.8	1.30	1.00	1.00	0.15	0.04	0.19
COKER FEED	3802	200.0	190.0	21.4	0.0001	190.0	19.8	1.30	1.00	1.00	0.15	0.04	0.19
COKER FEED	3805	200.0	190.0	1.8	0.0001	190.0	19.8	1.30	1.00	1.00	0.15	0.00	0.15
COKER GAS OIL	60	30.0	67.0	15.5	0.0001	190.0	23.9	1.00	1.00	1.00	0.02	0.00	0.03
# 6 FUEL OIL	84	150.0	150.0	8.5	0.0001	190.0	23.8	1.46	1.00	1.00	0.12	0.01	0.14
# 6 FUEL OIL	89	150.0	150.0	1.8	0.0001	190.0	23.8	1.46	1.00	1.00	0.12	0.00	0.13
# 6 FUEL OIL	355	15.0	58.0	3.8	0.0001	190.0	15.9	1.46	1.00	1.00	0.02	0.00	0.02
# 6 FUEL OIL	354	15.0	58.0	3.8	0.0001	190.0	15.9	1.46	1.00	1.00	0.02	0.00	0.02
# 6 FUEL OIL	398	90.0	120.0	8.5	0.0001	190.0	22.3	1.46	1.00	1.00	0.08	0.01	0.09
# 6 FUEL OIL	3803	200.0	190.0	21.4	0.0001	190.0	19.8	1.30	1.00	1.00	0.15	0.04	0.19
# 6 FUEL OIL	3804	200.0	190.0	21.4	0.0001	190.0	19.8	1.30	1.00	1.00	0.15	0.04	0.19
DUST OIL	NT-1	0.6	15.0	0.0	0.0002	190.0	8.0	1.46	0.75	1.00	0.00	0.00	0.00
DOCK EDC	415	50.0	100.0	0.0	1.8375	96.6	17.0	1.00	1.00	1.00	15.62	0.00	15.62
DOCK ALCOHOL	416	55.0	110.0	0.1	0.0140	145.0	16.0	1.00	1.00	1.00	0.89	0.01	0.89
DOCK ALCOHOL	672	10.0	43.0	0.2	0.0140	145.0	20.0	1.00	1.00	1.00	0.20	0.00	0.20
DOCK LAB	910	25.0	60.0	0.1	0.0002	190.0	24.0	1.00	1.00	1.00	0.03	0.00	0.03
OLEFIN	4300	0.3	11.0	0.0	0.1500	100.0	7.5	1.00	0.59	1.00	0.02	0.00	0.02
HEXANOL	4301	0.1	6.0	0.0	0.1000	100.0	5.0	1.00	0.53	1.00	0.01	0.00	0.01
RAFFINATE	107	3.0	25.0	121.8	0.0150	130.0	17.2	1.00	0.97	1.00	0.06	0.36	0.42
RAFFINATE	108	3.0	25.0	121.8	0.0150	130.0	17.2	1.00	0.97	1.00	0.06	0.36	0.42
PDIETHYLBENZENE	NT-10	10.0	42.5	0.0	0.0200	134.0	20.0	1.00	1.00	1.00	0.23	0.00	0.23
PDIETHYLBENZENE	NT-11	10.0	42.5	0.0	0.0200	134.0	20.0	1.00	1.00	1.00	0.23	0.00	0.23
METHANOL	NT-12	0.8	15.0	0.0	2.0000	32.0	12.0	1.00	0.75	0.60	0.13	0.00	0.13
METHANOL SLOP	NT-13	0.5	15.0	0.0	2.0000	32.0	8.0	1.00	0.75	1.00	0.11	0.00	0.11
										TOTAL	71.12	61.99	133.11

TOTAL CAPACITY (MBBLS)= 4708.2 THROUGHPUT (MMBBLS/YR)= 85.4

SAL 00000549

. OATING ROOF TANKS - 1987

TOT. LOSS

PRODUCT NAME	TANK NO.	CAP. MBBL	DIAMETER FEET	TURNOVERS PER YEAR	TRUE VAPOR PRESS PSIA	VAPOR MOL. WT.	LIQ DENS LB/GAL	CRUDE OIL FACTOR	WIND VEL MPH	CLINGAGE FACTOR	RFI STG. LOSS TPY	PRIMARY STG. LOSS TPY	WITH. LOSS TPY	TOTAL LOSS RFI SEAL TPY	TOTAL LOSS PRIMARY SEAL TPY	REDUCTIONS TO DATE TPY
CRUDE OIL	102	150	150	23.3	4.0	50.0	7.1	0.40	8.4	0.0015	0.3	3.5	0.1	0.5	3.6	3.1
CRUDE OIL	346	250	200	23.3	4.0	50.0	7.1	0.40	8.4	0.0015	0.5	4.6	0.1	0.6	4.8	4.2
CRUDE OIL	347	250	200	23.3	4.0	50.0	7.1	0.40	8.4	0.0015	0.5	4.6	0.1	0.6	4.8	4.2
CRUDE OIL	371	400	250	49.9	4.0	50.0	7.1	0.40	8.4	0.0015	0.6	5.8	0.4	1.0	6.2	5.2
CRUDE OIL	372	200	180	49.9	4.0	50.0	7.1	0.40	8.4	0.0015	0.4	4.2	0.3	0.7	4.4	3.7
CRUDE OIL	373	200	180	49.9	4.0	50.0	7.1	0.40	8.4	0.0015	0.4	4.2	0.3	0.7	4.4	3.7
FINISHED GASOLINE	25	25	67	16.3	8.6	64.0	5.6	1.00	8.4	0.0060	1.4	13.6	0.1	1.5	13.7	12.2
FINISHED GASOLINE	26	25	67	16.3	8.6	64.0	5.6	1.00	8.4	0.0060	1.4	13.6	0.1	1.5	13.7	12.2
FINISHED GASOLINE	30	80	120	21.1	8.6	64.0	5.6	1.00	8.4	0.0060	1.2	8.0	0.2	1.4	8.2	6.8
FINISHED GASOLINE	32	80	120	23.1	8.6	64.0	5.6	1.00	8.4	0.0060	2.4	24.3	0.2	2.7	24.5	21.8
FINISHED GASOLINE	33	80	120	83.1	8.6	64.0	5.6	1.00	8.4	0.0060	2.4	24.3	0.9	3.3	25.2	21.8
FINISHED GASOLINE	64	25	67	12.1	8.6	64.0	5.6	1.00	8.4	0.0060	1.4	13.6	0.1	1.4	13.6	12.2
FINISHED GASOLINE	65	25	67	12.1	8.6	64.0	5.6	1.00	8.4	0.0060	1.4	13.6	0.1	1.4	13.6	12.2
FINISHED GASOLINE	78	120	134	0.0	8.6	64.0	5.6	1.00	8.4	0.0060	2.7	27.1	0.0	2.7	27.1	24.4
FINISHED GASOLINE	79	120	134	21.1	8.6	64.0	5.6	1.00	8.4	0.0060	2.7	27.1	0.3	3.0	27.4	24.4
FINISHED GASOLINE	80	120	134	23.1	8.6	64.0	5.6	1.00	8.4	0.0060	2.7	27.1	0.3	3.1	27.4	24.4
FINISHED GASOLINE	92	25	67	26.6	8.6	64.0	5.6	1.00	8.4	0.0060	1.4	13.6	0.2	1.5	13.7	12.2
FINISHED GASOLINE	93	25	67	26.6	8.6	64.0	5.6	1.00	8.4	0.0060	1.4	13.6	0.2	1.5	13.7	12.2
FINISHED GASOLINE	87	150	150	36.2	8.6	64.0	5.6	1.00	8.4	0.0060	3.1	30.3	0.6	3.6	30.9	27.3
FINISHED GASOLINE	88	150 (050)	150	29.2	8.6	64.0	5.6	1.00	8.4	0.0060	3.1	30.3	0.5	3.5	30.8	27.3
UNFINISHED GASOLINE	27	25	67	15.5	8.6	68.0	5.6	1.00	8.4	0.0060	1.4	14.4	0.1	1.5	14.5	13.0
UNFINISHED GASOLINE	59	25	67	74.2	8.6	68.0	5.6	1.00	8.4	0.0060	1.4	14.4	0.4	1.9	14.8	13.0
UNFINISHED GASOLINE	85	150	150	21.1	8.6	68.0	5.6	1.00	8.4	0.0060	3.2	32.2	0.3	3.6	32.6	29.0
UNFINISHED GASOLINE	31	80	120	36.2	8.6	68.0	5.6	1.00	8.4	0.0060	2.6	25.8	0.4	3.0	26.2	23.2
UNFINISHED GASOLINE	77	120	134	38.5	8.6	68.0	5.6	1.00	8.4	0.0060	2.9	28.8	0.5	3.4	29.4	25.9
UNFINISHED GASOLINE	3	2	21	2.5	8.6	68.0	5.6	1.00	8.4	0.0060	0.5	4.5	0.0	0.5	4.5	4.1
UNFINISHED GASOLINE	98	35	80	35.1	8.6	68.0	5.6	1.00	8.4	0.0060	1.7	17.2	0.2	2.0	17.4	15.5
UNFINISHED GASOLINE	99	35	80	35.1	8.6	68.0	5.6	1.00	8.4	0.0060	1.7	17.2	0.2	2.0	17.4	15.5
UNFINISHED GASOLINE	18	15	52	35.5	8.6	68.0	5.6	1.00	8.4	0.0060	1.1	11.2	0.2	1.3	11.3	10.1
UNFINISHED GASOLINE	86	150	150	4.1	8.6	68.0	5.6	1.00	8.4	0.0060	3.2	32.2	0.1	3.3	32.3	29.0
LIGHT COKER GAS OIL-O	29	15	52	130.2	0.0	130.0	5.6	1.00	8.4	0.0060	0.0	0.0	0.6	0.6	0.6	0.0
UNFINISHED GASOLINE	199	30	67	127.5	8.6	68.0	5.6	1.00	8.4	0.0060	1.4	14.4	0.9	2.4	15.3	13.0
UNFINISHED GASOLINE	19	15	52	35.5	8.6	68.0	5.6	1.00	8.4	0.0060	1.1	11.2	0.2	1.3	11.3	10.1
LIGHT COKER GAS OIL-O	24	15	52	130.2	0.0	130.0	5.6	1.00	8.4	0.0060	0.0	0.0	0.6	0.6	0.6	0.0
UNFINISHED GASOLINE	61	10	43	15.5	8.6	68.0	5.6	1.00	8.4	0.0060	0.9	9.1	0.1	1.0	9.2	8.2
UNFINISHED GASOLINE	62	10	43	15.5	8.6	68.0	5.6	1.00	8.4	0.0060	0.9	9.1	0.1	1.0	9.2	8.2
KEROSENE-O	34	80	120	10.3	0.0	130.0	7.0	1.00	8.4	0.0060	0.0	0.1	0.1	0.1	0.2	0.1
SLOP	42	5	32	43.9	8.6	50.0	7.1	1.00	8.4	0.0060	0.5	5.1	0.1	0.6	5.2	4.5
SLOP	43	5	32	43.9	8.6	50.0	7.1	1.00	8.4	0.0060	0.5	5.1	0.1	0.6	5.2	4.5
SLOP	70	4	32	0.0	8.6	50.0	7.1	1.00	8.4	0.0060	0.5	5.1	0.0	0.5	5.1	4.5
DOCK LT. PARAFFIN	159	85	110	0.3	0.0	142.3	6.1	10.00	8.4	0.0015	0.2	1.8	0.0	0.2	1.8	0.0
DOCK HVY. PARAFFIN	402	55	110	0.4	0.0	170.3	6.2	10.00	8.4	0.0015	0.0	0.2	0.0	0.0	0.2	0.0
DOCK METHANOL	404	15	58	16.9	2.0	32.0	6.6	10.00	8.4	0.0015	1.0	0.6	0.0	1.0	0.6	0.0
HEAVY PARAFFIN	96	3	25	4.0	0.0	170.3	6.2	10.00	8.4	0.0015	0.0	0.1	0.0	0.0	0.1	0.0
HEAVY PARAFFIN	97	3	25	4.0	0.0	170.3	6.2	10.00	8.4	0.0015	0.0	0.1	0.0	0.0	0.1	0.0
PARAFFIN	194	80	120	0.0	0.0	142.3	6.1	10.00	8.4	0.0015	0.2	1.9	0.0	0.2	1.9	0.0
LT. PARAFFIN	195	3	28	4.3	0.0	142.3	6.1	10.00	8.4	0.0015	0.0	0.5	0.0	0.0	0.5	0.0
LT. PARAFFIN	196	3	28	4.3	0.0	142.3	6.1	10.00	8.4	0.0015	0.0	0.5	0.0	0.0	0.5	0.0
MTBE	NT-1	25	67	0.0	6.0	88.0	6.3	1.00	8.4	0.0015	1.1	11.2	0.0	1.1	11.2	10.1
MIXED XYLENES	NT-2	30	73	0.0	0.4	106.0	7.3	1.00	8.4	0.0060	0.1	0.8	0.0	0.1	0.8	0.7
MIXED XYLENES	NT-3	30	73	0.0	0.4	106.0	7.3	1.00	8.4	0.0060	0.1	0.8	0.0	0.1	0.8	0.7
REFORMATE SIDE-CUT	NT-4	55	100	0.0	2.0	81.0	7.4	1.00	8.4	0.0015	0.4	4.3	0.0	0.4	4.3	3.9
PARAXYLENE	NT-5	55	100	0.0	0.6	106.0	7.3	1.00	8.4	0.0060	0.2	1.6	0.0	0.2	1.6	1.5
PARAXYLENE	NT-6	55	100	0.0	0.6	106.0	7.3	1.00	8.4	0.0060	0.2	1.6	0.0	0.2	1.6	1.5
HEAVY REFORMATE	NT-7	10	43	0.0	0.4	106.0	7.3	1.00	8.4	0.0060	0.0	0.5	0.0	0.0	0.5	0.4
PARAXYLENE	NT-8	5	30	0.0	0.4	106.0	7.3	1.00	8.4	0.0060	0.0	0.0	0.0	0.0	0.0	0.0
PARAXYLENE	NT-9	5	30	0.0	0.4	106.0	7.3	1.00	8.4	0.0060	0.0	0.0	0.0	0.0	0.0	0.0
											60.7	590.2	10.3	71.0	600.5	525.5

TOTAL CAPACITY (MBBLS) = 3841 THROUGHPUT (MMBBLS/YR) = 189.8

EMISSIONS TO DATE - 75.0

48

60

New Tanks

108

SAL 000005550

TOTAL RELEASE SUMMARY - STORAGE TANKS
LBS/YR

BENZENE	-	1636
TOLUENE	-	1872
ETHYLBENZENE	-	182
O XYLENE	-	217
M XYLENE	-	406
P XYLENE	-	219
STYRENE	-	19
CUMENE	-	13
PSEUDOCUMENE	-	12
CYCLOHEXANE	-	2379
BIPHENYL	-	102
NAPHTHALENE	-	1376

SAL 000005551

Conoco Inc.
Calculation Sheet

Benzene, TOL — — Cyc.

STORAGE TANK LOSS
FLOATING ROOF TANKS

$$\text{STORAGE LOSS} = \text{TOTAL VOC} \times \text{MASS Fraction}_{(\text{component})} \times \left(\frac{P_c}{P_T}\right) \swarrow @\ 70^\circ$$

CRUDE OIL TOTAL LOSS = 4.1 TPY (RFI SEAL TPY ADDED)

BENZENE : $(4.1\ \text{TPY})\left(\frac{0.3}{100}\right)\left(\frac{1.5}{3.4}\right) = \boxed{0.0054\ \text{TPY Benzene}}$

ALL other chemical <1

SAL 000005552

Calculation Sheet

4/28

STORAGE TANK LOSS
Floating roof TANK

S.T. loss = TOTVOC × MF_c × $\left(\frac{P_c}{P_T}\right)$

→ FINISHED GASOLINE

TOTAL VOC loss = 32.1 TPY Finished gasoline

TOTAL Prod. Gasoline Split = 5,276,000,000 = 5.276×10^9

% REG = 27%

% unleaded = 47%

% Super unl = 26%

BENZENE:

REG ⇒ $(32.1 \frac{TON}{Y})(\frac{27\%}{100})(\frac{1.7}{100})(\frac{1.5}{6.2})$ = .0294 TPY

unleaded ⇒ $(32.1 \text{ TPY})(\frac{47\%}{100})(\frac{1.7}{100})(\frac{1.5}{6.2})$ = .0621 TPY

Super unleaded ⇒ $(32.1 \text{ TPY})(\frac{26}{100})(\frac{2.4}{100})(\frac{1.5}{6.2})$ = .0485

0.14 TPY BENZENE

TOL: $(32.1 \frac{TON}{Y})(\frac{7.9}{100})(\frac{0.4}{6.2})$ = **.164 TON/YR TOL**

STY = $32.1(.01)(\frac{.0967}{6.2})$ = .00E

(CALC ELSEWHERE

EB: $(32.1 \frac{TON}{YR})(\frac{1.7}{100})(\frac{.18}{6.2})$ = **.0158 TON/YR EB**

CUM = $32.1(.01)(\frac{.0619}{6.2})$ = .0C

O-xy: $(32.1 \frac{TON}{YR})(\frac{2.3}{100})(\frac{.19}{6.2})$ = **.0226 TON/YR O-xy**

PCUM = $32.1(.01)(\frac{.0393}{6.2})$ = .0C

m-xy: $(32.1 \text{ TPY})(\frac{4.0}{100})(\frac{.19}{6.2})$ = **.0393 TPY m-xy**

P-xy $(32.1 \text{ TPY})(\frac{1.7}{100})(\frac{.19}{6.2})$ = **.0167 TPY P-xy**

SAL 000005553

Calculation Sheet

4/28

Storage tank loss
floating roof tank

S.T Loss = (TOT VOC) x MF_c x $\left(\frac{P_c}{P_T}\right)$

SHOP — assume GASOLINE ⇒ TOT VOC Shop = 1.7 TPY

Benzene : AVE Conc. = (.27)(.014) + (.47)(.017) + (.26)(.024) = .018 = 1.8%

$(1.7 \frac{TPY}{yr})(\frac{1.8}{100})(\frac{1.5}{6.2})$ = .0074 TONS/yr Benzene

TOL : $(1.7 TPY)(\frac{7.9}{100})(\frac{0.4}{6.2})$ = .0087 TPY TOL

EB : $(1.7 TPY)(\frac{1.7}{100})(\frac{0.18}{6.2})$ = .00084 TPY EB

O-xy : $(1.7 TPY)(\frac{2.3}{100})(\frac{.19}{6.2})$ = .0012 TPY O-xy

M-xy : $(1.7 TPY)(\frac{4.0}{100})(\frac{.19}{6.2})$ = .00208 TPY M-xy

P-xy : $(1.7 TPY)(\frac{1.7}{100})(\frac{.19}{6.2})$ = .00089 TPY P-xy

Cyclohexane <1

STY $(1.7)(.01)(\frac{.0967}{6.2})$ = .00027 ✓

CUM $(1.7)(.01)(\frac{.0619}{6.2})$ = .00017

PCUM $(1.7)(.01)(\frac{.0393}{6.2})$ = .00011

SAL 000005554

Calculation Sheet

4/28

STORAGE TANK LOSS
Floating roof Tank

STORAGE TANK LOSS = (TOTAL VOC) x (MF$_c$) x $\left(\frac{P_S}{P_T}\right)$

UNFINISHED GASOLINE

TOTAL VOC = 28.2 TPY

Determine and Benzene Conc of unfinished gasoline

	Stream	% MADE FROM BLENDING	Benzene	TOL	EB	O-Xy	m-Xy	p-Xy	Cyclohex
unfinished gasoline	Butane	3.9	2.3	—	—	—	—	—	—
	Alkylate	11.2	0	—	—	—	—	—	—
	Pyro gasoline	0.6	1.0	4.0	0	1.0	1.5	0	1.0
	LSR gasoline	0.7	3.9	3.0	0	0	0	0	5.2
	Light Cracked gas	6.5	2.8	3.0	0	0	0	0	5.2
	Coking Cracked Gas	3.2	2.1	3.0	0	0	0	0	5.2
	Phy gasoline	2.5	0	0	0	0	0	0	0
	FCC Gasoline	36.4	1.1	4.4	1.2	1.9	2.0	5.0	1.0
	No. 2 Reformate	19.8	3.6	15.0	2.5	9.0	7.0	3.0	0
	No 3 Reformate	15.2	3.6	15.0	2.5	9.0	7.0	3.0	0

TOTAL = 5,394.7 MMBBS

AVE from conc. found in unfinished gasoline

AVE Benzene Conc = 0+1+2+3+4+5+6+7 = 2.03%

AVE % Tol Conc = 0+1+2+3+4+5+6 = 7.2%

AVE % EB Conc = 0+1+2 = 1.3%

AVE % O-Xy Conc = 0+1+2+3 = 2.1%

AVE % m-Xy Conc = 0+1+2+3 = 3.2%

AVE % P-Xy Conc = 0+1+2 = 2.9%

Cyclohexane = 0+1+2+3+4 = 0.9 %

SAL 000005555

Calculation Sheet

4/28

Storage tank loss
floating roof tank

Storage loss = (TOTAL VOC) × (MF_c) × (P_c / P_T)

Unfinished gasoline Total VOC = 28.2 TPY

Benzene : $(28.2 \text{ TPY})\left(\frac{2.03}{100}\right) \times \left(\frac{1.5}{6.2}\right) =$ .138 TPY Benzene

TOL : $(28.2)\left(\frac{7.2}{100}\right)\left(\frac{.04}{6.2}\right) =$ .131 TPY TOL

EB : $(28.2)\left(\frac{1.3}{100}\right)\left(\frac{.18}{6.2}\right) =$ .011 TPY EB

O-xy : $(28.2)\left(\frac{2.1}{100}\right)\left(\frac{.19}{6.2}\right) =$ .018 TPY oxy

m-xy : $(28.2)\left(\frac{3.2}{100}\right)\left(\frac{.19}{6.2}\right) =$ .029 TPY m-xy

P-xy : $(28.2)\left(\frac{2.9}{100}\right)\left(\frac{.19}{6.2}\right) =$ .025 p-xy

Cyclohex $(28.2)\left(\frac{.9}{100}\right)\left(\frac{1.6}{6.2}\right) =$ .065 TPY

BIPHENYL = $28.2 \text{ TPY} \times \frac{\left(\frac{.0193}{62}\right)}{2\pi} \times .01 =$ 1 LB/YR

HVY FCC GASO (ACTUALLY MORE LT MADE)

STYRENE : $(28.2)\left(\frac{1}{100}\right)\left(\frac{.0967}{62}\right) =$ .004 TPY

CUMENE : $(28.2)\left(\frac{1}{100}\right)\left(\frac{.0679}{62}\right) =$ .003 TPY

P CUMENE : $(28.2)\left(\frac{2}{100}\right)\left(\frac{.0291}{62}\right) =$ .004 TPY

SAL 000005556

Calculation Sheet

4/28

STORAGE LOSS
CONE ROOF TANKS

Storage Loss = (TOTAL VOC) × (MF$_c$) $\left(\frac{p_c}{p_T}\right)$

REFORMER FEED — TOTAL VOC LOSS = 56.22 TPY
(Refinery change) - assume Naphtha V. Press.

Benzene: (56.22 TPY)(1.0/100)(1.5/1.6) = .5271 TPY Benzene

TOL: (56.22 TPY)(4.5/100)(0.4/1.6) = .6325 TPY TOL

EB: (56.22 TPY)(1.0/100)(.18/1.6) = .0632 TPY EB

O-xy: (56.22 TPY)(1.0/100)(0.19/1.6) = .0668 TPY oxy

M-xy: (56.22 TPY)(2.0/100)(0.19/1.6) = .1335 TPY m-xy

P-xy: (56.22)(1.0/100)(0.19/1.6) = .0668 TPY p-xy

cyc. Hex.: (56.22)(2.0/100)(1.6/1.6) = 1.1244 TPY cyc Hex

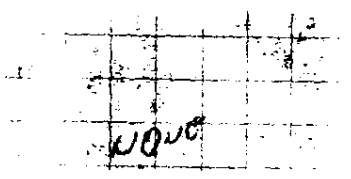

SAL 000005557

Storage Tanks

#1 Kerosene

$$Naph = \frac{(2.05)(.03)(.0045)}{.011} = \boxed{.025}$$

T-94	.08
T-95	.08
T-35	1.89
	2.05

#2 Distillate (Diesel)

$$Naph = \frac{44.17(.03)(.0045)}{(.009)} = \boxed{.663 \text{ TPY}}$$

SAL 000005558

Conoco Inc.
Calculation Sheet

Made By
Checked By
Date
Page of

Title

Job No.
Field
State

Lake Charles Refinery
Stream Concentrations
(Concentration, Wt %)

Stream	Benz	Tol	EB	o-xy	m-xy	p-xy	Ctrx
Reg Gasoline	1.4	7.9	1.7	2.3	4.0	1.7	<1
UL Gasoline	1.7	7.9	1.7	2.3	4.0	1.7	<1
SUL Gasoline	2.4	7.9	1.7	2.3	4.0	1.7	<1
FCC Gasoline (Lt)	1.1 (7)	4.4	1.2	1.9	2.0	5.0	1.0
FCC Gasoline (Hvy)	1.1 (7)	4.4	1.2	1.9	2.0	5.0	1.0
LSR Gasoline	3.9 (7)	3.0	<1	<1	<1	<1	5.2
Reformate	3.6 (7)	15.0	2.5	4.0	7.0	3.0	<1
Crude Wet Gas	0.2 (3)	<1	<1	<1	<1	<1	<1
Alkylate	<.1 (7)	<1	<1	<1	<1	<1	<1
Naphtha	1.0 (7)	4.5	1.0	1.0	2.0	1.0	2.0
Crude	0.3 (2)	<1	<1	<1	<1	<1	<1
JP-4	0.3	1.5	<1	<1	1.4	<1	1.4
Debutanizer OH	2.3 (7)	—	—	—		—	—
(Crude) NAPH + HDS Effluent	0.3						
Coker Gas	0.3 (7)	4.0	<1	1.0	1.5	<1	1.0

NOTES: (1) Per Steve Jones DHTA (1987/1985 Remainder)
(2) Per 1977-1985 Tech. Services Lab Reports
(3) Per 1971 Ponca Stream Survey
(4) Est. based on other Naphtha (or Gasoline) Data
(5) Ava Gasoline Study
(6) Ollie Eagle/Bill Guebelle
(7) Per Tim Myers Memo (Jan 7, 1988)

SAL 000005559

Conoco Inc.
Calculation Sheet

Made By
Checked By
Date
Page of
Title
Job No.
Field
State

13 231 PB. 7/9

SEE OTHER

~~[illegible]~~

PONCA CITY REFINERY

LAKE CHARLES

COMPOSITION, WT %

PRODUCT	BENZ	TOL.	EB	O-XY	M-XY	P-XY	CHX	NAPH (BIPHEN)	STY	CUM	TOM
UL GASOLINE	2.5	7.9	1.7	2.3	4.0	3.3	1.7	<1	<1	1.0	1.0	2.0
REG GASOLINE	2.5	7.9	1.7	2.3	4.0	2.9	[illegible]	[illegible]	<1	1.0	1.0	2.0
BASE GASOLINE	2.5	7.9	1.7	2.3	4.0	1.7	<1	<1	1.0	1.0	2.0
FCC GASOLINE	1.2	4.4	1.2	1.9	2.0	5.0	1.0	<1	1.0	1.0	1.0
REFORMATE	5.2	15.0	2.5	4.0	7.0	3.0	<1	<1	<1	1.0	1.0
ALKYLATE	0.3	<1	<1	<1	<1	<1	<1	<1	<1	<1	<1
SLOP-GASOLINE	2.5	7.9	1.7	2.3	4.0	1.7	<1	<1	1.0	1.0	2.0
CRUDE	0.1	<1	<1	<1	<1	<1	<1	<1	<1	<1	<1
JP-4	0.3	1.5	<1	<1	1.4	<1	1.4	<1	<1	<1	<1
NAPHTHA	0.5	2.2	1.0	1.0	2.0	1.0	2.0	<1	<1	<1	<1
JET 50	<1	<1	<1	<1	<1	<1	<1	3.0	<1	<1	<1
Nº 2 DIST.	<1	<1	<1	<1	<1	<1	<1	3.0	<1	<1	<1
CONDENSATE	<1	<1	<1	<1	<1	<1	<1	1.0	<1	1.0	1.0
KEROSENE	<1	<1	<1	<1	<1	<1	<1	3.0	<1	<1	<1
HEAVY FCC GASO.	1.2	4.4	1.2	1.9	2.0	5.0	1.0	1.0 (1.0)	1.0	1.0	1.0
COKER GASOLINE	0.2	4.0	<1	1.0	1.5	<1	1.0	<1	1.0	1.0	3.0
LSR GASOLINE	4.3	3.0	<1	<1	<1	<1	5.2	<1	<1	<1	<1
CRUDE OVERHEAD	0.2	<1	<1	<1	<1	<1	<1	<1	<1	<1	<1
SUL GASOLINE	2.3	7.9	1.7	2.3	4.0	1.4	<1	<1	1.0	1.0	2.0

GOOD NUMBER

USE LSR FOR ANY UNKNOWN GASOLINE STREAMS

VAPOR PRESSURES, PSIA

BENZENE	1.5
TOLUENE	0.4
ETHYL BENZENE	0.18
CYCLOHEXANE	1.6
XYLENES-	0.19
STYRENE	0.0967
CUMENE	0.0619
PSEUDO CUMENE	0.0393
NAPHTHALENE	0.0045
BIPHENYL	0.0193
CRUDE	3.4
GASOLINE	6.2
KEROSENE	0.011
DIESEL	0.009
NAPHTHA - JP-4	1.6

Conoco Inc.
Calculation Sheet

Made By
Checked By
Date
Page of
Title
Job No.
Field
State

APPENDIX I

FUGITIVE EQUIPMENT VOC CALCULATIONS AND DATA

SAL 000005562

Conoco Inc
Calculation Sheet

Made By
Checked By
Date
Page

Title

Job No.
Field
State

TOTAL RELEASE SUMMARY - FUGITIVE EQUIPMENT LOSSES
LBS/YR

BENZENE	-	7832
TOLUENE	-	23,687
ETHYLBENZENE	-	3936
O XYLENE	-	5866
M XYLENE	-	10,582
P XYLENE	-	5016
CYCLOHEXANE	-	8610
STYRENE	-	1908
CUMENE	-	2294
PSEUDO CUMENE	-	4580
NAPHTHALENE	-	3528
ETHYLENE	-	6994
PROPYLENE	-	62,114
1,3 BUTADIENE	-	408
BIPHENYL	-	282

FUGITIVES - ALL UNITS LAKE CHARLES ①

N° 3 CTU

CRUDE, STAB OH, LSR, NAPHTHA, KERO, DIESEL

BENZENE: 3.47 [.003 + .002 + .039 + .003] = .1631

TOL: 3.47 [.03 + .022] = .180

EB: 3.47 (.01) = .035

O-XY = 3.47(.01) = .035

M-XY = 3.47(.02) = .069

P-XY = 3.47(.01) = .035

CYCLO HEX = 3.47(.012 .02) = .250

STYRENE = 0 ETHY = 0

CUMENE = 0 PROPY = 0

P. CUMENE = 0 1,3 BD = 0

NAPHTHALENE = 3.47(.03 + .03) = .208

N° 4 HDS

KERO, DIES, NAPH, HDS/MOLEX GASO, OH LIQ, CRACKED GASO (DOUNT GASO 1/x) LSR COMP.

BENZENE: 1.46 (.003 + .028 + .039 + .002) = 0.105

TOL = 1.46 (2(.03) + .022) = 0.120 TPY

SAL 000005564

Conoco Inc.
Calculation Sheet

Made By Job No.
Checked By
Date Title Field
Page of State

N° 4 HDS (CONTD)

EB = 1.46 (.01) = .015

O-XY = 1.46 (.01) = .015

M-XY = 1.46 (.02) = .029

P-XY = 1.46 (.01) = .015

CYC HY = 1.46 (2(.052) + .02) = 0.181

STYR; CUM.; P. CUM. = 0; ETHY = 0; PROPY = 0; 1,3 BD = 0

NAPHTHALENE = 1.46 (.03 + .03) = 0.088

N° 5 HDS

N° 4 HDS OH LIQ

BENZENE = 1.46 (.002 x 2) = 0.0058

N° 3 CRU & HDS

NAPHTHA, REFORMATE, OVHD

BENZENE = 6.69 (.010 + .036) = .308

TOL = 6.69 (.045 + .15) = 1.30

EB = 6.69 (.01 + .025) = 0.234

O-XY = 6.69 (.04 + .01) = .335

M-XY = 6.69 (.02 + .07) = .602

SAL 000005565

N° 3 CRU (CONT'D)

P-XY = 6.69(.03 + .01) = .268

CHX = 6.69(.02) = 0.134

NAPH = 0; STYR = 0

CUMENE = 6.69(.01) = 0.067

P CUMENE = 0.067

~~ETHYLENE = 6.69(.07) = 0.468~~ MUL 7→ 0

~~PROPYLENE = 6.69(.02) = .134~~ 0

1,3 BUTADIENE = 0

REGULAR COKER

COKER GASO; COKER GAS; NAPHTHA

BENZENE = .511 (.003 + .003) = .0031 MEANY IF CG = .3

TOL = .511 (.04 + .022) = .0317

E BENZENE = .511 (.01) = .0051

O-XYLENE = .511 (.01 + .01) = .0102

M-XYLENE = .511 (.015 + .01) = .0013 ADJ.

P-XYLENE = 0 ← ADJ. NAPH.

SAL 000005566

Conoco Inc.
Calculation Sheet

Made By
Checked By
Date
Page of

Title

Job No.
Field
State

REG COKER (CONT'D)

CHX = .511 (~~.01 +~~ .01 ADJ) = .010

NAPH = 0;

STYRENE = .511(.01) = .00511

CUMENE = .511(.01) = .00511

P. CUMENE = .511 (.03) = .015

ETHYLENE = .511 (.01) = .0051

PROPYLENE = .511 (.07) = .036

1,3 BUTADI = 0

PREMIUM COKER

GASOLINE, WET GAS

BENZENE = 1.723 (.003) = .00517

TOL = 1.723(.04) = .069

OB = 1.723(.01) = .017

O-XY = 1.723(.01) = .017

M-XY = 1.723(.015) = .026

P-XY = 0

SAL 000005567

PREM COKER (CONT'D)

CHX = 1.723(.02 + .01) = 0.052

NAPH = 0 ; 1 3 BD = 0

STYRENE = (.01) 1.723 = .017

CUMENE = (.01) 1.723 = .017

P. CUMENE = 1.723 (.03) = 0.052

ETHY = 1.723(.01) = .017

PROPY = 1.723(.07) = 0.12

NO 2 COKER

CRACKED GASO; COKER GAS; GASO.

BENZENE = 3.058 (.028 + .003) = 0.0948

TOL = 3.058 (.03 + .04) = 0.214

EB = 0 ; P-XY = 0; 1,3 BD = 0

O-XY = 3.058 (.01) = .031

M-XY = 3.058 (.015) .0459

CHX = 3.058 (.052 + .01) = 0.190

STYRENE = 3.058 (.01) = .031

SAL 000005568

Conoco Inc.
Calculation Sheet

Made By
Checked By
Date
Page of

Title

Job No.
Field
State

N° 2 COKER (CONT'D)

CUMENE = 3.058 (.01) = 0.031

PCUMENE = 3.058 (.03) = .092

ETHYLENE = 3.058 (.01) .031

PROPY = 3.058 (.07) = 0.21

GAS RECOVERY PLANT.

COKER GAS, CRYO P-B THORM GASO, COKER GASO (LIQ), P-P, B-B, GAP GASO.

BENZENE = 6.43 ((.01 + .003 + .004) = 0.109

TOL = 6.43 ((.04) 3) = 0.77 [illegible] COKER GAS FOR REMAINDER

EB = 6.43 (3 (0)) = 0

O-XY = 6.43 x 3 x .01 = 0.193

M-XY = 6.43 x 3 x .015 = 0.29

P-XY = 0 ; NAPH = 0

CHX = 6.43 x 3 x .01 .193

STYRENE = CUMENE = .193

PCUMENE = 6.43 x 3 x .03 = 0.579

ETHYLENE = 6.43 (.01) 0.0643

SAL 000005569

Conoco Inc.
Calculation Sheet

Made By
Checked By
Date
Page of
Title
Job No.
Field
State

GRP (CONT'D)

PROPYLENE = 6.43 (.07 + .33 + .68 + .05) = 7.27 TPY

1,3 BUTADIENE = 6.43 (.003 + .00 + .002 + .001) = .058

N° 6 HDS

DISTILLATE HDS GASO., (USE LSR COMP) DISTILLATE, ST. OH LIQ. (XL)

BENZENE = 1.87 ((.002)2 + .039) = .0804

TOL = 1.87 (.03) = .056

EB = O-XY = M-XY = P-XY = 0 = STY, CUM, PCUM = 0

CHY = 1.87 (.052) = 0.0972

NAPH = 1.87 (.03 x 2) = 0.112

N° 8 HDS - HEAVIES

N° 7 HDS

#6 HDS OH LIQ

BENZENE = 1.25 (.002) = .0025

FCC FEED PREP DIESEL

NAPHTHALENE = 0.94 (.03) = .028

SAL 000005570

Made By
Checked By
Date
Page of

Conoco Inc.
Calculation Sheet

Title

Job No.
Field
State

N° 2 CRUDE UNIT

CRUDE, OH., LSR GASO, NAPH, KERO, DIESEL

* BENZENE 3.47 (.003 + .002 + .039 + .003) = .163 (.169)

* TOL = 3.47 (.03 + .022) = .180 (.187)

* EB = 3.47(α) = O-XY = P-XY = .035 (.036

M-XY = 3.47(.02) = .069 (.072

In most cases, total is not charged b/c the charge is so small

* CHX = 3.47 (.014 + .052) = .229 (.238)

NAPH = STY = CUM = PCUM = 0 = ETH, PROP, 1,3 BD

FCC

FCC TAIL GAS, P-P, B-B, FCC GASO., SLOP(2)

BENZENE = 7.23 (.01 + 2(.003)) = 0.116

TOL = 7.23 (.044) = 0.318

EB = 7.23 (.012) = .087

O-XY = 7.23 (.019) = .137

M-XY = 7.23 (.02) = .145

P-XY = 7.23 (.05) = .362

CHX = 7.23 (.01) = .072

SAL 000005571

Conoco Inc.
Calculation Sheet

Made By
Checked By
Date
Page of

Title

Job No.
Field
State

FCC (CONT'D)

NAPH = 0

STYRENE = 7.23(.01) = .072 = CUM = PCUM

ETHYLENE = 7.23(.16) = 1.16

PROPYLENE = 7.23(.12 + .68 + .05) = 6.15 + PY

1,3 BUTD, = 7.23 (.002 + .003 + .003) = .0578

B.PHENYL = 7.23(.01) = .072

CRYO

FEED, P-B, TAIL GAS

ETHYLENE = 7.57 (.16 + .12) = .211

PROPYLENE = 7.57(.33 + .08) = 3.10

1,3 BUTD, = 0

CAT POLY

P-P, P-P

~~ETHY = 5.26 (2(0)) = 0~~

~~PROPY = 5.26 (2(.68)) = 7.15~~

1,3 BD = 5.26 (2(.003)) = .032

SAL 000005572

Conoco Inc.
Calculation Sheet

Made By
Checked By
Date
Page of
Title
Job No.
Field
State

LT GASO. SPLTR

GRP. GASO, LSR(2), NAPHTHA, CRACKED GASO., REF. NAP.

BENZENE = 1.71 (.004 + 2(.039) + .003 + .028 + .0.) = 0.210

TOL = 1.71 (4(.03) + 2(.022) + .045) = 0.357

EB = 1.71 x .02 = .02 = O-XY = (M-XY) = PXY .02

CHY = 1.71 (4(.052) + 2(.02)) = .424

NAPH = STY = CUM = PC = ETH = PROP = 1,3 BD = 0

N° 1 HDS

NAPH, NAP REF, KERO. (ZX)

BENZ = 1.46 (.003 + .01) = .019

TOL = 1.46 (.022 + .045) = .098

EB = ~~.028~~ = O-XY = P-XY 1.46 (.02) = .029

M-XY = ~~.035~~ = CHY 1.46 (.04) = .058

~~NAPH 1.46 (.03) x2~~ = .088

STY = CUM = PCUM = ETH = PROP = 1 3 BD

SAL 000005573

Conoco Inc.
Calculation Sheet

Made By
Checked By
Date
Page of

Title

Job No.
Field
State

LAKE CHARLES 14

N° 2 CRU & HDS

NAPH, MOLEX GASO, REF, ~~GAS~~

BENZENE = 12.59 (.003 + .039 + .036) = .98

TOL = 12.59 (.022 + .15 + .03) = 2.54

EB = 12.59 (.01 + .025) = .441

O-XY = 12.59 (.04 + .01) = .630

M-XY = 12.59 (.02 + .07) = 1.13

P-XY = 12.59 (.03 + .01) = .504

CHY = 12.59 (.02 + .052) = .906

NAPHTAL = 0 = STYR

CUM = 12.59 (.01) = PCUM = .126

~~ETHYLENE = 12.42 (.15) = 1.86~~

~~PROPYLENE = 12.42 (.07) = .869~~

13 BUTDI = 0

THERMAL CRACKER — THERM. GASO., COKER GAS.

BENZ = 1.58 (.01) = .016

TOL = 1.58 (.04) = .063

SAL 000005574

Conoco Inc.
Calculation Sheet

Made By
Checked By
Date
Page of

Title

Job No.
Field
State

LAKE CHARLES

EB = 0 = P-XY

O-XY = 1.58(.01) = .016

M-XY = 1.58(.015) - .024

CHX = 1.58(.01) - STYR = CUM = .016

NAPHL = 0 = 13BD

P CUM = 1.58(.03) = .047

ETHY = 1.58(.01) = .016

PROPY = 1.58(.07) = .111

PBC

PBC, COND, P-P, B-B, CH GASO.

BENZ = 5.61 (.013 + .003 + .033) = .275

TOL = 5.61 (2(.03)) = .337

EB = 0 = O-XY = M-XY = P-XY = STY = CUM = PCUM = NAPL

CHX = 5.61 x 2 x .052 = .583

ETHYLENE = 5.61 (0) = 0

PROPYLENE = 5.61 (.68 + .05) = 4.10 TPY

13 BUTADI = 5.61 (.003 + .003) = .034 TPY

SAL 000005575

Conoco Inc.
Calculation Sheet

Made By ____ Checked By ____ Date ____ Page ____ of ____

Title ____

Job No. ____ Field ____ State ____

LAKE CHARLES

ALKYLATION

B-B, P-P

ETHYLENE = 3.49 (0) = 0

PROPYLENE = 3.49 (.63 + .05) = 2.55

1,3 BD = 3.49 (.003 + .003) = .021

ACID PLANT

SWS GAS

ETHY = 1.04 (.09) = .094

PROPY = 1.04 (.25) = .26

1,3 BD = 1.04 (.001) = .00104

TANK FARM / BLENDING

REG GASO, JL GASO, SUL GASO, DIESEL, KERO, CRUDE, JP4
ASPHALTS & GASOILS

BENZENE = 20.66 (.014 + .017 + .024 + .003 + .003)
1.26 TPY

TOL = 20.66 x (.079 x 3 + .015) = 5.21

EB = 20.66 (.017 x 3) = 1.05

O-XY = 20.66 (.023 x 3) = 1.43

M-XY = 20.66 (.04 x 3 + .014) = 2.77

SAL 000005575

Conoco Inc.
Calculation Sheet

Made By
Checked By
Date
Page of
Title
Job No.
Field
State

P-XY = 20.66 (.017 x 3) = 1.05

CHY = 20.66 (.01 x 3 + .014) .91

NAPL = 20.66 (.03 x 2) = 1.24

STYR = 20.66 (.01 x 3) = .620 = CUM

PCUM = 20.66 (.3 x .02 = 1.24

[illegible] = $\frac{20.66}{9}$ x 3 (.01) = .069

BLEND STOCKS

SAL 000005577

Conoco Inc.
Calculation Sheet

Made By
Checked By
Date
Page of

Title

Job No.
Field
State

FUGITIVES - ALL UNITS LAKE CHARLES ①

REFERENCE - TABLE I ANNUAL MONITORING ESTIMATE.
TABLE D-2 - ATTACHED

STREAM VOC = NUMBER OF VAPOR & LIQUID VALVES, PUMPS, COMPRESSORS, AND FLANGES TIMES THE LEAKING AND NON-LEAKING EMISSION FACTORS DIVIDED BY ESTIMATED TOTAL MAJOR STREAMS IN UNIT.

Nº 4 / Nº 5 HDS (LESS Nº 2 CTU)

7 MAJOR STREAMS

LIQ VALVES = 115 (40/75)
VAP VALVES = 238
FLANGES = 1580
COMPRESSORS = 2
PUMPS = 4/6

VOC = 40(.0038) + 75(.00051) + 231(.0011) + 7(.099) + 1580(.0018) + 4(.026) + 6(.030) + 2(.2) × 24 × 365 ÷ 7 = 5838 ÷ 2 units = 2919 ÷ 2000 = 1.46 TPY

VOC = 1.46 TPY

Nº 5 HDS

SEE ABOVE

VOC = 1.46 TPY

SAL 000005578

Conoco Inc.
Calculation Sheet

Made By
Checked By
Date
Page of
Title
Job No.
Field
State

Nº 2 CTU

9 STREAMS

LV = 221^6 (77°/144)
VV = 147^0
F = 1647
P = 10^2 (3^2/7)
C = 2

VOC = 71(.0038) + 6(.19) + 144(.00051) + 147(.0011) + 1647(.0018) + 1(.026) + 2(.96) + 7(.030) + 2(.20) × 24 × 363 × $\frac{1}{2000}$ ÷ 9 = 3.47

VOC = **3.47 TPY**

Nº 3 CTU

9 STREAMS

ASSUME SAME AS Nº 2

VOC = **3.47 TPY**

Nº 1 CALCINER

VOC = **0**

Nº 2 CALCINER

VOC = **0**

SAL 000005579

Conoco Inc.
Calculation Sheet

ade By		Job No.	
Checked By			
Date	Title	Field	
Page	of	State	

FUGITIVES LAKE CHARLES (2)

PT. ARTHUR REFINERY

VOC = 0

GRU

10 STREAMS

LV = 321 34/66
VV = 128 18
F = 1854
C = 2
P = 17 1/4

VOC = 287(.0038) + 34(.19) + 66(.00051) + 110(.0011) + 18(.099) + 1854(.0018) + 2(.2) + 16(.026) + 1(.96) + 4(.030) x 24 x 364 x 1/2000 ÷ 10 =

VOC = 6.43 TPY

Nº 6 HDS

5 STREAMS — CALC. FOR Nº 6 & Nº 7 THEN SPLIT IN HALF

LV = 126 7/62
VV = 89 6
F = 997
P = 6/2

VOC = 119(.0038) + 7(.19) + 62(.00051) + 83(.0011) + 6(.099) + 997(.0011) + 6(.026) + 2(.030) = 4.509 ÷ 2 = 2.25 x 24 x 347 x 1/2000 ÷ 5 = 1.87

VOC = 1.87 TPY

SAL 000005580

Conoco Inc.
Calculation Sheet

Made By
Checked By
Date
Page of
Title
Job No.
Field
State

FUGITIVES LAKE CHARLES

Nº 7 HDS

ASSUME 2.25 LB/HR ON Nº 6 HDS
7 STREAMS

$$2.25\,(24)(325)\left(\frac{1}{2000}\right) \div 7 = 1.25$$

VOC = **1.25 TPY**

Nº 8 HDS

7 STREAMS

VV = 80
F = 288

$$VOC = 78(.0011) + 2(.095) + 288(.0015) \times 24 \times 325 \times \frac{1}{2000} \div 7 = .45$$

VOC = **.45 TPY**

H2 SYSTEM

NO POLLUTANTS

CDR

NO POLLUTANTS

Nº 1 HDS

ASSUME SAME AS Nº 4 HDS

VOC = **1.46 TPY**

SAL 000005581

Conoco Inc.
Calculation Sheet

Made By			Job No.
Checked By			
Date		Title	Field
Page	of		State

FCC FEED PREP

4 STREAMS

LV = 13°/0
VV = 20'
F = 119

VOC = 10(.0038) + 3(.19) + 19(.0011) + 1(.099) + 119(.0018) × 24 × 332 × $\frac{1}{2000}$ ÷ 4 = .94

VOC = **0.94 TPY**

FCC

7 STREAMS

LV = 309°/393
VV = 227°
F = 2978
P = 15/20
C = 2'

VOC = 309(.0038) + 393(.00051) + 227(.0011) + 2978(.0018) + 15(.026) + 20(.020) + 1(.2) + 1(3.54) × 24 × 360 × $\frac{1}{2000}$ ÷ 7 = 7.23

VOC = **7.23 TPY**

SAL 000005582

FUGITIVES

(6)

CRYO GAS PLANT

5 STREAMS

LV = 168 17%
VV = 216 8
F = 1382
P = 7%
C = 6%

$$VOC = 151(.0038) + 17(.19) + 206(.0018) + 8(.099) + 1382(.0018) + 7(.026) + 6(.2) \times 24 \times 363 \times \frac{1}{2000} \div 5 = 7.57$$

VOC = **7.57 TPY**

CAT POLY

4 STREAMS

LV = 373%
VV = 95%
F = 1685
P = 10%

$$VOC = 373(.0038) + 95(.0011) + 1685(.0018) + 10(.026) \times 24 \times 364 \times \frac{1}{2000} \div 4 = 5.26$$

VOC = **5.26 TPY**

SAL 000005583

Conoco Inc.
Calculation Sheet

ade By
Checked By
Date
Page of
Title
Job No.
Field
State

FUGITIVES

LT. GASO. SPLITTER

5 STREAMS

LV = 4 x 45 = 180
F = 180 x 3.6 = 648
P = 4

VOC = 180(.0038) + 648(.0018) + 4(.026) x 24 x 365 x $\frac{1}{2000}$ ÷ 5 = 1.71

VOC = 1.71 TPY

Nº 2 CRU & HDS (Nº 2 REFORMER)

5 STREAMS

LV = (322 26/36)
VV = 350 3
F = 3034
P = 16 3/2
C = 2

VOC = 296(.0038) + 26(.19) + 36(.00051) + 347(.0011) + 3(.044) + 3034(.0018) + 13(.026) + 3(.96) + 2(.030) + 2(.2) x 24 x 330 x $\frac{1}{2000}$ ÷ 5 = 12.59

VOC = 12.59 TPY

SAL 000005584

Conoco Inc.
Calculation Sheet

Made By
Checked By
Date
Page of
Title
Job No.
Field
State

FUGITIVES LAKE CHARLES

UNIT 15 THERMAL CRACKER

6 STREAMS

LV = 141² 105²/36
VV = 93²
F = 342
P = 2° 2/1

VOC = [103(.0033) + 2(.19) + 91(.0011) + 2(.099) + 342(.0018) + 36(.0005) + 2(.026) + (.03)] 24 x 294 x 1/2000 ÷ 6
= 1.58 TPY (1.63)

UNIT 42 CASINGHEAD UNIT

8 STREAMS

LV = 473¹⁹
VV = 78'
F = 1984
P = 11'

VOC = [454(.0038) + 19(.19) + 77(.0011) + 1(.099) + 1984(.0018) + 10(.026) + .96] 24 x 363 x 1/2000 ÷ 8
= 5.61 TPY (5.62)

UNIT 43 ALKYLATION

9 STREAMS

LV = 360¹²
VV = 45°
F = 1446
P = 24°
C = 2°

VOC = [348(.0038) + 12(.19) + 45(.0011) + 1446(.0018) + 24(.026) + 2(.20)] 24 x 360 x 1/2000 ÷ 9
= 3.49 TPY (3.31)

SAL 000005585

Conoco Inc.
Calculation Sheet

Made By
Checked By
Date
Page of

Title

Job No.
Field
State

LAKE CHARLES

*3 Refineries

N° 3 CRU & HDS

5 MAJOR STREAMS

VV = 409°
LV = 314° 283/31
F = 3078
P = 18 1/2
C = 6°

VOC = [409(.0011) + 283(.0038) + 31(.00051) + 3078(.0018) + 18(.026 + 2(.03) + 6(.2)] 24 × 315 × 1/2000 ÷ 5

[6.19]

= 6.69 TPY

N° 1 COKER

~ 7 STREAMS

VV = 261°
LV = 81' (17'/64)
F = 1231
P = 1/4
C = 2

VOC = [236(.0011) + 5(.099) + 16(.0038) + 1(.19) + 1231(.0018) + 64(.00
1(.026) + 4(.030) + 2(.20)] = 3.82

REG = 3.82 × 24 × 78 × 1/2000 ÷ 7 = 0.511 TPY (.5034)

PREM = 3.82 × 24 × 263 × 1/2000 ÷ 7 = 1.723 TPY (1.697)

N° 2 COKER

VV = 288°
LV = 164° (34'/130)
F = 1627
P = 3°/11

VOC = [285(.0011) + 3(.099) + 30(.0038) + 4(.19) + 1627(.0018)
130(.00051) + 3(.026) + 11(.030)] 24 × 365 × 1/2000 ÷ 7 = 3.058 TPY (3.033)

Conoco Inc.
Calculation Sheet

Made By
Checked By
Date
Page of
Title
Job No. SAL 000005586
Field
State

FUGITIVES

ACID PLANT

3 STREAMS VV = 70³
F = 252

VOC = 67(.0011) + 3(.004) + 252(.0018) × 24 × 365 × 1/2000 ÷ 2 =

VOC = 1.04 TPY

SULFUR PLANT

NONE

TANK FARM

8 STREAMS – REG GASO, LL GASO, SUL GASO, DIESEL, KERO, CRUDE, HEAVIES, JP-4

LV = 1977 48/330
VU = 100³
P = 100'/13
C = 6
F = 8665

VOC = 1929(.0038) + 48(.19) + 330(.00051) + 97(.0011) + 3(.099) + 99(.026) + 1(.96) + 13(.030) + 6(.20) + 8665(.0018) × 24 × 365 × 1/2000 ÷ 8 = 20.66 1981

VOC = 20.66 TPY

SAL 000005587

VAPOR PRESSURES, PSIA

BENZENE	1.5
TOLUENE	0.4
ETHYL BENZENE	0.18
CYCLOHEXANE	1.6
XYLENES-	0.19
STYRENE	0.0967
CUMENE	0.0619
PSEUDO CUMENE	0.0393
NAPHTHALENE	0.0045
BIPHENYL	0.0193
CRUDE	3.4
GASOLINE	6.2
KEROSENE	0.011
DIESEL	0.009
NAPHTHA - JP-4	1.6

SAL 000005588

TOTAL RELEASE SUMMARY - PROCESS DRAINS
LBS/YR

BENZENE	-	912
TOLUENE	-	534
ETHYLBENZENE	-	88
O XYLENE	-	93
M/I XYLENE	-	87
P XYLENE	-	150
CUMENE	-	18
PSEUDOCUMENE	-	8
CYCLOHEXANE	-	2052

PROCESS DRAINS — LAKE CHARLES — (1)

CAPPED - 2229
NOT CAPPED - 713

TOTAL VOC = $(2229 \times .007 \frac{LB}{HR}) + (713 \times .07 \frac{LB}{HR}) = 65.5 \frac{LB}{HR}$

$65.5 \frac{LB}{HR} \times 24 \frac{HR}{DAY} \times 365 \frac{DAY}{YR} \times \frac{TON}{2000 LBS} = 286.9$ TPY

VOC = 286.9 TPY

* ASSUME CRUDE COMPOSITION

VOC × WT% × V.P. FACTOR = TONS/YR EMISSION

BENZENE = $286.9 \times \frac{.36}{100} \times \frac{1.5}{3.4} = .456$ TPY — 912 LBS/YR

TOLUENE = $286.9 \times \frac{.79}{100} \times \frac{.4}{3.4} = .267$ TPY — 534

ETHYLBENZENE = $286.9 \times \frac{.29}{100} \times \frac{.18}{3.4} = .044$ TPY — 88

M-XYLENE = $286.9 \times \frac{.47}{100} \times \frac{.19}{3.4} = .075$ TPY — 150

P-XYLENE = $286.9 \times \frac{.27}{100} \times \frac{.19}{3.4} = .0433$ TPY — 87

O-XYLENE = $286.9 \times \frac{.29}{100} \times \frac{.19}{3.4} = .0465$ TPY — 93

SEE APPENDIX E FOR COMPOSITION DATA

SAL 000005590

Conoco Inc.
Calculation Sheet

Made By
Checked By
Date
Page of
Title
Job No.
Field
State

PROCESS DRAINS LAKE CHARLES (2)

CUMENE = 286.9 × .17/100 × .0619/3.4 = .0089 TPY 1 LB/H

PSEUDOCUMENE = 286.9 × .12/100 × .0393/3.4 = .0040 TPY 8

CYCLOHEXANE = 286.9 × .76/100 × 1.6/3.4 = 1.026 TPY 2052

SAL 000005591

Made By
Checked By
Date
Page of

Conoco Inc.
Calculation Sheet

Title

Job No.
Field
State

- CUMENE, PSEUDO CUMENE & STYRENE COMP. DATA MEMO

NAPHTHALENE AND BIPHENYL DATA

STREAM	COMPOSITION, WT % NAPHTHALENE	BIPHENYL
JET FUEL - (JET 50)	3	<1
N° 2 DIESEL	3	<1
CRUDE CONDENSATE	1	<1
KEROSENE	3	<1
HEAVY FCC GASOLINE	1	1

CRUDE COMPOSITIONAL DATA

NOTE: USE THIS FOR PROCESS DRAINS

	WT %
BENZENE	~~0.36~~ → 0.1 for PONCA CITY & BILLINGS
CYCLOHEXANE	0.76
TOLUENE	0.79
ETHYLBENZENE	0.29
M-XYLENE	0.47
P-XYLENE	0.27
O-XYLENE	0.29
* CUMENE	0.17
* PSEUDO-CUMENE	0.12
NAPHTHALENE	0.01 +
STYRENE	0.05 +
BIPHENYL	NOT TESTED; NEGLIGIBLE

SAL 000005592

* THESE ARE FROM A CRUDE MIXTURE BUT SHOULD BE CLOSE. NO DATA ON NAPHTHALENE & BIPHENYL. MAY ASSUME SOMETHING LATER. MUST CHECK THESE WITH TSL.
+ FROM PC WASTE ANALYSIS FOR DENVER API SLOP OIL.

TOTAL RELEASE SUMMARY - FUEL GAS FUGITIVES
LBS/YR (FLARE & HEATERS)

ETHYLENE - 3709
PROPYLENE - 5154

FLARE

LAKE CHARLES

FUEL GAS TO FLARE = 23.7 TPY
(98% EFF → 2% OUT STACK)

PROPYLENE = $23.7 \times \frac{5}{100}$ = 1.19 TONS/YR

ETHYLENE = $23.7 \times \frac{3.6}{100}$ = 0.85 TONS/YR

* INFO FROM PSD PERMIT APPLICATION UNDER VOC REVIEW; TABLE 1, PAGE 13

SAL 000005594

HEATERS - FUEL GAS LAKE CHARLES

30 TOTAL
PROPYLENE ($C_3^=$) WT % = 5 } FROM BILL PETERSON
ETHYLENE ($C_2^=$) WT % = 3.6

HEATERS × AVG # OF VALVES/HEATER FROM DENVER VOC MONITORING VALVE COUNT + TOTAL # OF VALVES IN BOILER & FUEL GAS AS LISTED ON ATTACHED SHEET OF L.C. MONITORING ESTIMATE

= TOTAL NUMBER OF VALVES

30 × 38 + 103 + 189 = 1432 VALVES × 3.6 (PER ANDIAN SURVEY) =

FLANGES = 1432 × 3.6 = 5155 FLANGES

VALVES × EMISSION FACTOR (TABLE D-1, ATTACHED) + FLANGES × EMISSION FACTOR (TABLE D-1, ATTACHED) = TPY

1432(.012) + 5155(.0018) × 24 × 365 = ~~26.46~~ 115.9 TPY

ETHYLENE = ~~26.46~~ 115.9 × .036(WT %) = 4.17 TPY × $\frac{1117}{2512}$ = 3709

PROPYLENE = ~~26.46~~ 115.9 × .05(WT %) = 5.80 TPY × $\frac{1117}{2512}$ = 5154

SAL 000005595

Conoco Inc.
Calculation Sheet

Made By
Checked By
Date
Page of
Title
Job No.
Field
State

TABLE D-1. AVERAGE FUGITIVE EMISSION FACTORS FOR THE SYNTHETIC ORGANIC CHEMICALS MANUFACTURING INDUSTRY (SOCMI)[a]

Fugitive-emission source	Emission factor (lb/h)
Pump seals	
Light liquids	0.11
Heavy liquids	0.047
Valves (in-line)	
Gas	0.012
Light liquid	0.016
Heavy liquid	0.00051
Gas safety-relief valves	0.23
Open-ended lines	0.0037
Flanges	0.0018
Sampling connections	0.033
Compressor seals	0.50

[a] Emission Factors for Equipment Leaks of VOC and HAP, EPA-450/3-86-002, January 1986, Table 3-4. These factors take into account a leak frequency determined from field studies in the synthetic organic chemicals manufacturing industry. Light liquids have a vapor pressure greater than 0.1 psia at 100°F.

SAL 000005596

TABLE D-2. LEAKING AND NONLEAKING AVERAGE FUGITIVE EMISSION FACTORS FOR THE SYNTHETIC ORGANIC CHEMICALS MANUFACTURING INDUSTRY (SOCMI)[a]

Fugitive-emission source	Leaking (>10,000 ppm) emission factor (lb/h)	Nonleaking (<10,000 ppm) emission factor (lb/h)
Pump seals		
Light liquids	0.96	0.026
Heavy liquids	0.85	0.030
Valves (in-line)		
Gas	0.099	0.0011
Light liquid	0.19	0.0038
Heavy liquid	0.00051	0.00051
Gas safety-relief valves	3.72	0.098
Open-ended lines	0.0263	0.0033
Flanges	0.083	0.00013 (.0016)
Sampling connections	-	-
Compressor seals	3.54	0.20

[a] Emission Factors for Equipment Leaks of VOC and HAP, EPA-450/3-86-002, January 1986, Table 3-3. These factors take into account a leak frequency determined from field studies in the synthetic organic chemicals manufacturing industry. Light liquids have a vapor pressure greater than 0.1 psia at 100°F.

SAL 000005597

SUMMARY

Between March 3 and May 28, 1987, PEI conducted the fifth annual Volatile Organic Compound (VOC) fugitive emission survey at the Conoco refinery in Westlake, Louisiana. This is the fifth consecutive year that PEI has conducted this type of VOC screening program in this plant. The survey covered all the required VOC sources including vapor valves, relief valves, compressors, liquid valves, pumps, and process drains.

Tables 1 through 6 summarize the screening results. Each table presents data for a specific source type (vapor valves, relief valves, compressors, liquid valves, pumps, and process drains). Each table shows the various plant units, the number of leaking sources, and the total number of sources for the fourth and fifth year annual screenings. Because of continuous changes in the refinery and the ability to locate all the sources, the total number of sources in a particular unit will change slightly from year to year. The data show:

- For vapor valves, 105 leaked out of a total of 4,119 (2.55 percent).
- For relief valves, 4 leaked out of a total of 136 (2.94 percent).
- For compressors, 0 leaked out of a total of 18.
- For liquid valves, 196 leaked out of a total of 7,270 (2.70 percent).
- For pumps, 9 leaked out of a total of 245 (3.67 percent).
- For process drains, 11 leaked out of a total of 2,971 (0.37 percent).

The above data indicate that there were a total of 325 leaking sources out of a total of 14,730 sources. Thus, the plant leak rate is 2.21 percent (325 ÷ 14,730 x 100).

SAL 000005598

TABLE 1. VAPOR VALVES.

Unit	Fourth Annual screening Leakers	Fourth Annual screening Total	Fifth Annual screening Leakers	Fifth Annual screening Total
Alkylation	6	35	0	45
Tank Farm	1	83	3	100
Crude Unit No. 2	0	153	0	147
EFS	14	312	7	385
PBC	3	80	1	78
Boilers	5	157	6	186
No. 2 Reformer	0	342	3	350
Cat Poly	16	88	0	95
FCC Unit	2	197	0	227
Amine Units	0	39	2	40
Fuel Gas	3	54	1	54
Acid Plant	0	70	3	70
No. 1 Coker	1	261	5	261
No. 3 Reformer	9	401	0	409
No. 3 Amine	1	40	0	40
Sulfur Plant	1	80	5	80
HDS - Nos. 6 & 7	6	97	6	89
Hydrogen	13	424	14	415
Gas Recovery	2	114	18	128
No. 2 Coker	0	290	3	288
Thermal	0	93	2	93
Feed Prep	0	20	1	20
No. 8 HDS	0	70	2	80
CRYO	9	247	8	216
No. 3 Vacuum	**	**	4	125
Calciner	*	*	11	98
TOTAL	92	3,747	105	4,119

* Unit not operating.

**New NSPS Unit.

SAL 000005599

TABLE 2. RELIEF VALVES

Unit	Fourth Annual screening		Fifth Annual screening	
	Leakers	Total	Leakers	Total
Alkylation	0	2	0	2
Tank Farm	0	12	1	13
Crude Unit No. 2	0	1	0	0
EFS	0	2	0	2
PBC	0	10	2	11
No. 2 Reformer	0	8	1	9
Cat Poly	0	9	0	10
FCC Unit	0	4	0	6
Amine Units	0	2	0	3
Fuel Gas	0	3	0	3
No. 1 Coker	0	2	0	2
No. 3 Reformer	0	4	0	4
HDS - Nos. 6 & 7	0	5	0	5
Hydrogen	0	32	0	31
Gas Recovery	0	5	0	5
Thermal	0	5	0	5
Feed Prep	0	1	0	1
CDR	0	2	0	3
No. 8 HDS	0	2	0	2
CRYO	0	19	0	19
TOTAL	0	130	4	136

SAL 000005600

TABLE 3. COMPRESSORS

Unit	Fourth Annual screening Leakers	Fourth Annual screening Total	Fifth Annual screening Leakers	Fifth Annual screening Total
Alkylation	0	1	0	1
Tank Farm	2	2	0	3
Crude Unit No. 2	1	1	0	1
EFS	0	1	0	1
No. 2 Reformer	0	1	0	1
No. 3 Reformer	0	3	0	3
FCC Unit	0	1	0	1
No. 1 Coker	0	1	0	1
Hydrogen	0	2	0	2
Gas Recovery	0	1	0	1
CRYO	1	3	0	3
TOTAL	4	17	0	18

*Unit not operating.

SAL 000005601

TABLE 4. LIQUID VALVES

Unit	Fourth Annual screening Leakers	Fourth Annual screening Total	Fifth Annual screening Leakers	Fifth Annual screening Total
Alkylation	22	360	12	360
Tank Farm	142	2,239	48	2,307
Crude Unit No. 2	11	228	6	221
EFS	16	367	5	336
PBC	34	473	19	473
No. 2 Reformer	15	368	26	358
Cat Poly	50	374	0	373
FCC Unit	27	675	0	702
Amine Units	1	101	2	91
Fuel Gas	1	49	1	49
No. 1 Coker	1	80	1	81
No. 3 Reformer	29	306	0	314
No. 3 Amine	0	2	0	2
HDS - Nos. 6 & 7	10	192	7	188
Hydrogen	11	285	5	293
Gas Recovery	10	393	34	387
No. 2 Coker	0	164	4	164
Thermal Unit	6	141	2	141
Feed Prep	7	131	3	13
CDR	0	120	0	119
No. 8 HDS	9	206	4	0
CRYO	5	235	17	168
Calciner	*	*	0	39
No. 3 Vacuum	**	**	0	91
TOTAL	407	7,489	196	7,270

*Unit not operating.

SAL 000005602

TABLE 5. PUMPS

Unit	Fourth Annual screening Leakers	Fourth Annual screening Total	Fifth Annual screening Leakers	Fifth Annual screening Total
Alkylation	7	17	0	17
Tank Farm	15	79	1	81
Crude Unit No. 2	3	7	2	7
EFS	3	14	1	14
PBC	2	11	1	11
No. 2 Reformer	3	11	3	13
Cat Poly	2	7	0	7
FCC Unit	10	24	0	25
No. 1 Coker	2	4	0	3
No. 3 Reformer	4	14	0	14
HDS - Nos. 6 & 7	0	6	0	6
Hydrogen	0	4	0	4
Gas Recovery	1	15	1	15
No. 2 Coker	0	10	0	10
Thermal Unit	2	2	0	2
Feed Prep	0	3	0	0
CDR	0	7	0	7
No. 8 HDS	0	2	0	0
CRYO	0	7	0	5
Calciner	*	*	0	4
TOTAL	54	244	9	245

*Unit not operating.

SAL 000005603

TABLE 6. PROCESS DRAINS

Unit	Fourth Annual screening LK/LK	Fourth Annual screening No Cap/Cap	Fifth Annual screening LK/LK	Fifth Annual screening No cap/cap
Alkylation	2/11	34/102	0/0	31/105
Tank Farm	7/12	281/368	2/0	275/346
Crude Unit No. 2	2/2	31/87	0/0	31/88
EFS	2/3	62/121	0/0	64/121
PBC	0/0	22/115	0/0	22/109
Boilers	0/1	5/49	0/0	5/50
No. 2 Reformer	0/0	17/124	0/0	5/128
Cat Poly	0/3	32/75	0/0	30/76
FCC Unit	1/2	50/165	0/0	49/168
Amine Units	0/1	5/28	0/0	1/6
Fuel Gas	0/0	2/20	0/0	2/20
Acid Plant	0/0	5/9	0/0	5/9
No. 1 Coker	0/0	13/54	0/0	13/54
No. 3 Reformer	0/9	14/181	0/0	17/183
No. 3 Amine	0/0	3/7	0/0	3/7
Sulfur Plant	0/0	1/6	0/0	1/6
HDS - Nos. 6 & 7	0/7	13/55	0/1	12/52
Hydrogen	1/3	56/150	1/2	52/153
Gas Recovery	0/0	34/89	0/0	35/88
No. 2 Coker	0/0	21/158	0/0	21/159
Thermal Unit	0/1	10/51	0/0	9/52
Feed Prep	0/0	15/21	0/0	15/21
CDR	0/0	10/19	0/0	10/19
No. 8 HDS	0/3	0/74	0/0	0/70
CRYO	1/0	7/110	0/3	5/106
Calciner	*/*	*/*	0/0	0/7
No. 3 Vacuum	*/*	*/*	0/2	0/26
TOTAL	16/35	743/2238	3/8	713/2229

*Unit not operating.

SAL 000005604

For fugitives

TABLE I
CONOCO, INC.
LAKE CHARLES REFINERY
ANNUAL MONITORING ESTIMATE

TLVNGCC	Unit	Total	Vapor Valves	Liquid Valves	Pumps	Compressors	Process Drains	Relief Valves (DON'T COUNT - TO FLARE)
1446	Alkylation	561	45	360 (360/0)	17 (24)	1 (2)	136	2
9663	Tank Farm	3,125	100	2,307 (1977/330)	81 (100/13)	3 (6)	621	13
1647	Crude Unit No. 2	495	147	221 (77/144)	7 (3/7)	1 (2)	119	0
3227	EFS	923	385	336 (118/218)	14 (7/13)	1 (2)	185	2
1984	PBC	704	78	473 (473/0)	11 (11/0)	0	131	11
670	Boilers	241	186	0	0	0	55	0
3024	No. 2 Reformer	864	350	358 (322/36)	13 (16/2)	1 (2)	133	9
50	Cat Poly	591	95	373 (373/0)	7 (10)	0	106	10
2978	FCC Unit	1,178	227	702 (309/393)	25 (5/20)	1 (2)	217	6
1.2	Amine Units	141	40	91 (91/0)	0	0	7	3
371	Fuel Gas	128	54	49 (49/0)	0	0	22	3
232	Acid Plant	84	70	0	0	0	14	0
1231	No. 1 Coker	415	261	81 (17/64)	3 (1/4)	1 (2)	67	2
[illegible]	No. 3 Reformer	944	409	314 (283/31)	14 (13/2)	3 (6)	200	4
	No. 3 Amine	52	40	2 (2/0)	0	0	10	0
	Sulfur Plant	87	80	0	0	0	7	0
1497	HDS - Nos. 6 & 7	352	89	188 (126/62)	6 (6/2)	0	64	5
	Hydrogen	950	415	293 (293/0)	4 (6/0)	2 (4)	205	31
1254	Gas Recovery	659	128	387 (321/66)	15 (17/4)	1 (2)	123	5
[illegible]	No. 2 Coker	642	288	164 (34/130)	10 (3/11)	0	180	0
[illegible]	Thermal	302	93	141 (105/36)	2 (2/1)	0	61	5
[illegible]	Feed Prep	70	20	13 (13/0)	0	0	36	1

SAL 000005605

TABLE I (CONTINUED)
CONOCO, INC.
LAKE CHARLES REFINERY
ANNUAL MONITORING ESTIMATE

Unit	Total	Vapor Valves	Liquid Valves	Pumps	Compressors	Process Drains	Relief Valves
CDR	158	0	119[2]	7[0]	0	29	3
288 No. 8 HDS	152	80[2]	0[0]	0[0]	0	70	2
1582 CRYO	522	216[8]	168[17] (168/0)	5[0] (7/0)	3[0] (6)	111	19
Calciner	148	98[11]	39[0]	4[0]	0	7	0
No. 3 Vacuum	242	125[7]	91[0]	0	0	26	0
Vista Returns(1)	?	0	?	0	0	0	0
HAD System ← BE SURE (E DO)	99	0	(LTD) 99[2]	0	0	0	0
TOTAL	14,829+	4,119	7,369+	245	18	2,942	136

Note:

1. Unknown quantity of sources; however, number of sources expected to be less than 20.

SAL 000005606

APPENDIX J

LOADING LOSS VOC CALCULATIONS

SAL 000005607

Conoco Inc.
Calculation Sheet

Made By
Checked By
Date
Page of

Title

Job No.

Field

State

TOTAL RELEASE SUMMARY - LOADING
LBS/YR

BENZENE	-	1001
TOLUENE	-	1134
ETHYLBENZENE	-	92
O XYLENE	-	147
M XYLENE	-	257
P XYLENE	-	110
STYRENE	-	9
CUMENE	-	15
PSEUDOCUMENE	-	13
NAPHTHALENE	-	10

LOADING LOSS — LAKE CHARLES — (1)

GASOLINE AVG CONC = $\frac{834.9\,m}{2,800,300}$ REG (1.4) + $\frac{1347.8\,m}{2,800,300}$ MC (1.7) + $\frac{617.6\,m}{2,800,300}$ SUP (2.

= .417 + .818 + .529 = 1.76 %

TOTAL VOC = 10.62 TPY

VOC × WT % × V.P. CORRECTION × 2000 = LBS/YR.

BENZENE = $10.62 \times \frac{1.76}{100} \times \frac{1.5}{6.2} \times 2000$ = 90.44 LBS/YR

TOLUENE = $10.62 \times \frac{7.9}{100} \times \frac{.4}{6.2} \times 2000$ = 108.26 LBS/YR

ETHYLBENZENE = $10.62 \times \frac{.7}{100} \times \frac{.18}{6.2} \times 2000$ = 10.48 LBS/YR

O-XYLENE = $10.62 \times \frac{2.3}{100} \times \frac{.19}{6.2} \times 2000$ = 14.97 LBS/YR

M-XYLENE = $10.62 \times \frac{4.0}{100} \times \frac{.19}{6.2} \times 2000$ = 26.04 LBS/YR

P-XYLENE = $10.62 \times \frac{1.7}{100} \times \frac{.19}{6.2} \times 2000$ = 11.07 LBS/YR

STYRENE = $10.62 \times \frac{1}{100} \times \frac{.0967}{6.2} \times 2000$ = 3.31 LBS/YR

CUMENE = $10.62 \times \frac{1}{100} \times \frac{.0619}{6.2} \times 2000$ = 2.12 LBS/YR

PSEUDO CUMENE = $10.62 \times \frac{2}{100} \times \frac{.0793}{6.2} \times 2000$ = 2.69 LBS/YR

LOADING LOSS — LAKE CHARLES — ③

JP-4 — ALL PIPELINE — 0 LOSS

LOADING RACK (KEROSENE)

NAPHTHALENE = 20(.03) × .0045/.011 = .245 LBS/YR

(DIESEL)

NAPHTHALENE = 432(.03) × .0045/.009 = 6.48 LBS/YR

BARGE LOADING

REFORMATE

BENZENE = 85455 × .036 × 1.5/6.2 = 744.29 LBS/YR

TOLUENE = 85455 × .15 × 0.4/6.2 = 826.98 LBS/YR

EB = 85455 × .025 × .18/6.2 = 62.02 LBS/YR

O-XY = 85455 × .04 × .16/6.2 = 104.75 LBS/YR

M-XY = 85455 × .07 × .15/6.2 = 183.31 LBS/YR

P-XY = 85455 × .03 × .15/6.2 = 78.56 LBS/YR

~~C11X = 85455 × -~~ = 0

Cum = 85455 × .01 × .0619/6.2 = 8.53 LBS/YR

PCum = 85455 × .01 × .0393/6.2 = 5.42 LBS/YR

SAL 000005610

SHEET

VOC EMISSION CALCULATIONS
TRUCK RACK LOADING LOSS

DATE	=	29-Apr-89
TIME PERIOD : MONTH,YR START	=	JAN, 1987
: MONTH,YR END	=	DEC, 1987
LOCATION	=	LAKE CHARLES
POINT SOURCE I.D. #	=	LOADING RACK
MATERIAL HANDLED	=	**GASOLINE**
THRUPUT (bbls)	=	280000
VRU EFFICIENCY (%)	=	98

LOADING LOSS

CALTI A	MOLECULAR WEIGHT	Mv =	62
CALTI B	TEMPERATURE (F)	T =	70

19-Apr-89 10:28 PM Cap

SHEET

LOADING LOSS

CALTI A	MOLECULAR WEIGHT	Mv =	62
CALTI B	TEMPERATURE (F)	T =	70
CALTI C	VAPOR PRESSURE (psia)	P =	6.2
CALTI D	SATURATION FACTOR	S =	1

UNCONTROLLED EMISSIONS (lb)	L1 =	1067868
CONTROLLED EMISSIONS (lb)	L1 = L1*(1-eff/100)	
	=	**21257**

CALTI Z TO PRINT AND/OR SAVE

19-Apr-89 10:29 PM Cap

SAL 000005611

BP

VOC EMISSION CALCULATIONS
TRUCK RACK LOADING LOSS

DATE	=	20-May-88
TIME PERIOD : MONTH,YR START	=	JAN, 1987
: MONTH,YR END	=	DEC, 1987
LOCATION	=	LAKE CHARLES
POINT SOURCE I.D. #	=	LOADING RACK
MATERIAL HANDLED	=	KEROSENE
THRUPUT (bbls)	=	708000
VRU EFFICIENCY (%)	=	98

LOADING LOSS

MOLECULAR WEIGHT	Mv	=	130
TEMPERATURE (F)	T	=	70
VAPOR PRESSURE (psia)	P	=	0.011
SATURATION FACTOR	S	=	1

UNCONTROLLED EMISSIONS (lb)	L1	=	1000
CONTROLLED EMISSIONS (lb)	L1	= L1*(1-eff/100)	
		=	20

SAL 000005612

SDS

VOC EMISSION CALCULATIONS
TRUCK RACK LOADING LOSS

DATE	=	20-May-88
TIME PERIOD : MONTH.YR START	=	JAN. 1987
: MONTH.YR END	=	DEC. 1987
LOCATION	=	LAKE CHARLES
POINT SOURCE I.D. #	=	LOADING RACK
MATERIAL HANDLED	=	DIESEL
THRUPUT (bbls)	=	18710000
VRU EFFICIENCY (%)	=	98

LOADING LOSS

MOLECULAR WEIGHT	Mv =	130
TEMPERATURE (F)	T =	70
VAPOR PRESSURE (psia)	P =	0.009
SATURATION FACTOR	S =	1
UNCONTROLLED EMISSIONS (lb)	L1 =	21615
CONTROLLED EMISSIONS (lb)	L1 = L1*(1-eff/100)	
	=	432

SAL 000005613

VOC EMISSION CALCULATIONS
TRUCK RACK LOADING LOSS

DATE	=	20-May-88
TIME PERIOD : MONTH,YR START	=	JAN, 1987
: MONTH,YR END	=	DEC, 1987
LOCATION	=	LAKE CHARLES
POINT SOURCE I.D. #	=	BARGE LOADING
MATERIAL HANDLED	=	REFORMATE
THRUPUT (bbls)	=	423000
VRU EFFICIENCY (%)	=	0

LOADING LOSS

MOLECULAR WEIGHT	Mv =	66
TEMPERATURE (F)	T =	70
VAPOR PRESSURE (psia)	P =	6.2
SATURATION FACTOR	S =	0.5
UNCONTROLLED EMISSIONS (lb)	Ll =	85455
CONTROLLED EMISSIONS (lb)	Ll = Ll*(1-eff/100)	
	=	85455

SAL 000005614

6-2-88

Barge Loader

Loading 206 MBBL Gasoline
9000 BBL Kero
349 MBBL Diesel } no VRU

Truck loading - VRU 98% good

Tank 404 81,000 BBL
15,000 BBL

MEOH 100% SIZE, ROOF TYPE
INT FR

propane & Cryo ← Inject

NO23 - inject

~~*Caustic~~

Hydro - loaded, tank

SAL 000005615

Calculation Sheet

Barge Loading (K[illegible])

Naphthalene = 6(.03) = .18 lbs/yr × .0045 / .011 = .074 lbs/yr

Barge Loading (Diesel)

Naphthalene = 202(.03) × .0045 / .009 = 3.03 lbs/yr

Barge Loading (Gasoline)

Benzene = 39094(.0176)(1.5) ÷ 6.2 = 166.5 lbs/yr = .0832 TPY

Toluene = 39094(.079)(.4) ÷ 6.2 = 199.25 = .0996 TPY

Ethyl Benzene = 39094(.017)(.18) ÷ 6.2 = 19.29 = .0096 TPY

o-xylene = 39094(.023)(.19) ÷ 6.2 = 27.55 = .0138 TPY

m-xylene = 39094(.04)(.19) ÷ 6.2 = 47.92 = .024 TPY

p-xylene = 39094(.017)(.19) ÷ 6.2 = 20.36 = .010 TPY

[illegible] = 39094 = 0 = 0

[illegible] = 39094(.01)(.0967) ÷ 6.2 6.10 = .003

[illegible] = 39094(.01)(.0619) ÷ 6.2 = 3.90 = .00195

[illegible] = 39094(.02)(.0393) ÷ 6.2 = 4.96 = .0025

SAL 000005616

```
ZDDDDDDDADDDDDDDDDDDDDDDDDDDBDDDDDDDDDDDDDDDDDDDCDDDDDDDDDDDDDDDDDDDDDDDDDDDD?
1                                                                              3
2                                        VOC EMISSION CALCULATIONS             3
3                                         TRUCK RACK LOADING LOSS              3
4                                                                              3
5                                                                              3
6                DATE                                  =          27-May-88    3
7                TIME PERIOD : MONTH,YR START           =          JAN. 1987    3
8                            : MONTH,YR END             =          DEC. 1987    3
9                LOCATION                              =       LAKE CHARLES    3
10               POINT SOURCE I.D. #                   =      BARGE LOADING    3
11               MATERIAL HANDLED                      =           KEROSENE    3
12               THRUPUT (bbls)                        =               9000    3
13               VRU EFFICIENCY (%)                    =                  0    3
14                                                                             3
15                                                                             3
16                                        LOADING LOSS                         3
17                                        ------------                         3
18                                                                             3
19  [ALT] A      MOLECULAR WEIGHT                 Mv =                  130    3
20  [ALT] B      TEMPERATURE (F)                   T =                   70    3
?MMMMMMMMMMMMMMMMMMMMMMMMMMMMMMMMMMMMMMMMMMMMMMMMMMMMMMMMMMMMMMMMMMMMMMMMMMMMMAIN>
27-May-88  09:32 AM                                                CapNum
```

```
D16:                                                                      SHEET

ZDDDDDDDADDDDDDDDDDDDDDDDDDDBDDDDDDDDDDDDDDDDDDDCDDDDDDDDDDDDDDDDDDDDDDDDDDDD?
 6                                        LOADING LOSS                         3
 7                                        ------------                         3
18                                                                             3
    [ALT] A      MOLECULAR WEIGHT                 Mv =                  130    3
L   [ALT] B      TEMPERATURE (F)                   T =                   70    3
21  [ALT] C      VAPOR PRESSURE (psia)             P =                0.011    3
22  [ALT] D      SATURATION FACTOR                 S =                  0.5    3
23                                                                             3
24                                                                             3
25                                                                             3
26               UNCONTROLLED EMISSIONS (lb)      Ll =                    6    3
27                                                                             3
28               CONTROLLED EMISSIONS (lb)        Ll = Ll*(1-eff/100)          3
29                                                  =                          3
30                                                                             3
31               ***********************************************************   3
32                                                                             3
33                            [ALT] Z TO PRINT AND/OR SAVE                     3
34                                                                             3
35               ***********************************************************   3
?MMMMMMMMMMMMMMMMMMMMMMMMMMMMMMMMMMMMMMMMMMMMMMMMMMMMMMMMMMMMMMMMMMMMMMMMMMMMMAIN>
27-May-88  09:32 AM                                                CapNum
```

SAL 000005617

```
A1:                                                                       SHEET

ZDDDDDDDADDDDDDDDDDDDDDDDDDDBDDDDDDDDDDDDDDDDDDDCDDDDDDDDDDDDDDDDDDDDDDDDDDDD?
1                                                                              3
2                                        VOC EMISSION CALCULATIONS             3
3                                         TRUCK RACK LOADING LOSS              3
4                                                                              3
5                                                                              3
6                DATE                                  =          27-May-88    3
7                TIME PERIOD : MONTH,YR START           =          JAN. 1987    3
8                            : MONTH,YR END             =          DEC. 1987    3
9                LOCATION                              =       LAKE CHARLES    3
```

```
ZDDDDDDDDADDDDDDDDDDDDDDDDDDDBDDDDDDDDDDDDDDDDDDDCDDDDDDDDDDDDDDDDDDDDDDDDDDDDDDD?
1                                                                                  3
2                                        VOC EMISSION CALCULATIONS                 3
3                                         TRUCK RACK LOADING LOSS                  3
4                                                                                  3
                                                                                   3
                DATE                                  =            27-May-88       3
7               TIME PERIOD : MONTH,YR START          =            JAN. 1987       3
8                           : MONTH,YR END            =            DEC. 1987       3
9               LOCATION                              =        LAKE CHARLES        3
10              POINT SOURCE I.D. #                   =       BARGE LOADING        3
11              MATERIAL HANDLED                      =              DIESEL        3
12              THRUPUT (bbls)                        =              349000        3
13              VRU EFFICIENCY (%)                    =                   0        3
14                                                                                 3
15                                                                                 3
16                                       LOADING LOSS                              3
17                                       ------------                              3
18                                                                                 3
19  [ALT] A     MOLECULAR WEIGHT                 Mv =                    130       3
20  [ALT] B     TEMPERATURE (F)                   T =                     70       3
TMMMMMMMMMMMMMMMMMMMMMMMMMMMMMMMMMMMMMMMMMMMMMMMMMMMMMMMMMMMMMMMMMMMMMMMMMMMMMMMMMAIN>
27-May-88  09:35 AM                                                   CapNum
```

```
A35:                                                                          SHEET

ZDDDDDDDDADDDDDDDDDDDDDDDDDDDBDDDDDDDDDDDDDDDDDDDCDDDDDDDDDDDDDDDDDDDDDDDDDDDDDDD?
16                                       LOADING LOSS                              3
17                                       ------------                              3
18                                                                                 3
    [ALT] A     MOLECULAR WEIGHT                 Mv =                    130       3
    [ALT] B     TEMPERATURE (F)                   T =                     70       3
21  [ALT] C     VAPOR PRESSURE (psia)             P =                  0.009       3
22  [ALT] D     SATURATION FACTOR                 S =                    0.5       3
23                                                                                 3
24                                                                                 3
25                                                                                 3
26              UNCONTROLLED EMISSIONS (lb)      L1 =                    202       3
27                                                                                 3
28              CONTROLLED EMISSIONS (lb)        L1 = L1*(1-eff/100)               3
29                                                  =                              3
30                                                                                 3
31              ***********************************************************        3
32                                                                                 3
33                          [ALT] Z TO PRINT AND/OR SAVE                           3
34                                                                                 3
35              ***********************************************************        3
TMMMMMMMMMMMMMMMMMMMMMMMMMMMMMMMMMMMMMMMMMMMMMMMMMMMMMMMMMMMMMMMMMMMMMMMMMMMMMMMMMAIN>
27-May-88  09:36 AM                                                   CapNum
```

SAL 000005618

D6: (D1) @NOW SHEET

```
DDDDDDADDDDDDDDDDDDDDDDDDBDDDDDDDDDDDDDDDDDDDDCDDDDDDDDDDDDDDDDDDDDDDDDDDDDD?
1                                                                            3
2                                   VOC EMISSION CALCULATIONS                3
3                                    TRUCK RACK LOADING LOSS                 3
4                                                                            3
5                                                                            3
6              DATE                                =          27-May-88     3
7              TIME PERIOD : MONTH,YR START       =          JAN, 1987      3
8                          : MONTH,YR END          =          DEC, 1987      3
9              LOCATION                            =       LAKE CHARLES      3
10             POINT SOURCE I.D. #                 =      BARGE LOADING      3
11             MATERIAL HANDLED                    =          [redacted]     3
12             THRUPUT (bbls)                      =            206000       3
13             VRU EFFICIENCY (%)                  =                 0       3
14                                                                           3
15                                                                           3
16                                   LOADING LOSS                            3
17                                   ------------                            3
18                                                                           3
19  [ALT] A    MOLECULAR WEIGHT                Mv =                  62     3
20  [ALT] B    TEMPERATURE (F)                  T =                  70     3
THMMM
```

VAPOR PRESSURES, PSIA

BENZENE	1.5
TOLUENE	0.4
ETHYL BENZENE	0.18
CYCLOHEXANE	1.6
XYLENES-	0.19
STYRENE	0.0967
CUMENE	0.0619
PSEUDO CUMENE	0.0393
NAPHTHALENE	0.0045
BIPHENYL	0.0193
CRUDE	3.4
GASOLINE	6.2
KEROSENE	0.011
DIESEL	0.009
NAPHTHA - JP-4	1.6

SAL 000005620