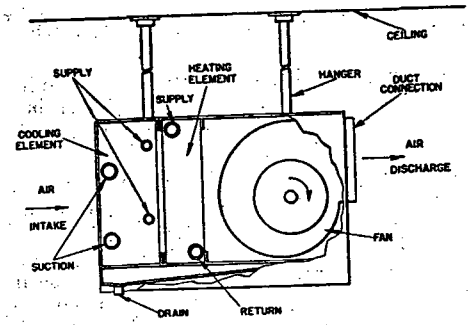

FIG. 1. HORIZONTAL REMOTE TYPE UNIT AIR CONDITIONER

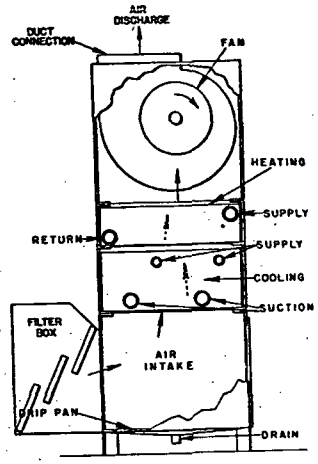

FIG. 2. VERTICAL REMOTE TYPE UNIT AIR CONDITIONER

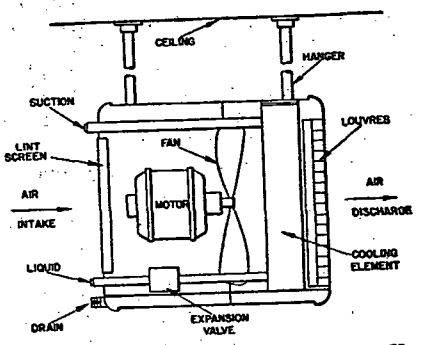

FIG. 3. SUSPENDED PROPELLER FAN TYPE UNIT AIR CONDITIONER

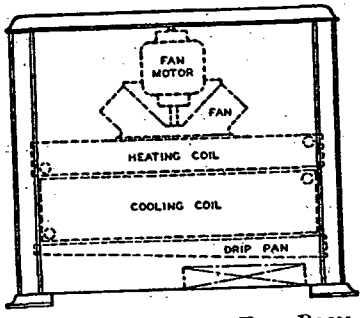

FIG. 5. REMOTE FLOOR TYPE ROOM UNIT AIR CONDITIONER

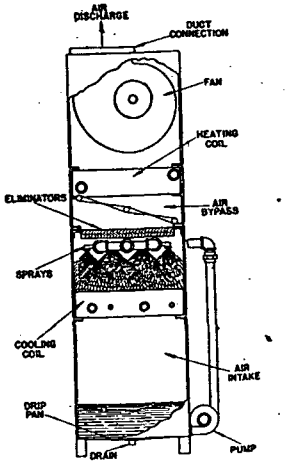

FIG. 4. SPRAY TYPE REMOTE UNIT AIR CONDITIONER

tubes, the air resistance and the space requirements of the cooling and heating coils should be carefully checked.

Humidification. Spray-type humidifiers are usually used in remote systems, but in some cases pan-type humidifiers or steam humidifiers are also used. Some condensation on the inside of the unit casing may occur with possible water damage if the unit is located in a cold space without adequate insulation. Spray-type humidifiers should be located so that no carryover of moisture occurs.

Filters. It is almost axiomatic that all units should have filters. Some small suspended units of 1 ton capacity or less, with low coil-face velocities and propeller fans, are equipped only with lint screens or operate without filters, but in them the coils must be periodically cleaned and there is constant danger of clogging of the drain, with the possibility of water damage. Filters used are usually of the throw-away type, although cleanable filters are available for most of the larger units. Care should be taken to insure adequate filter surface, since the cross-sectional area of the unit is seldom adequate for filter area. V-shaped or staggered filter arrangements are quite commonly used to increase filter area.

Motors. In some units where the motor is mounted inside, adequate access for maintenance and clearance for tightening belts are imperative. When motors are mounted in this manner, the heat equivalent of the motor input must be added to the heat load to be absorbed by the system, and this requires a lower exit air temperature at the coils. Usually, however, the motor is located outside of the casing where it is readily accessible for service. In this case, only the brake horsepower required by the fan is transformed into heat to be included in the load calculations.

In either application, motors should be selected with adequate horsepower to handle the design volume of air against the resistance of the system when the coils are wet, and then checked against the possible horsepower requirements for the increased volume of air obtained when the coils are dry.

SOUND ISOLATION

Both suspended and vertical floor-mounted units can transmit vibration through the supports. Wherever such transmission of sound might be objectionable, the supports should be isolated through rubber-in-shear or other sound deadeners. (For design of suitable sound deadeners see section Controlling Vibration from Machine Mountings in Chapter 41.)

OTHER TYPES OF UNITS

Features of various other types of remote air conditioners are given in the following paragraphs.

Spray-Type Unit

Fig. 4 shows a spray-type unit used by designers who prefer air washing and coil wetting features. These units are equipped with a pump that sprays water or brine over the coils. Due to the direct mixing of the condensate and the spray, provision must be made for overflow in summer and replacement of water evaporated in winter.

Dehumidifying Units

In a further modification of spray-type units, absorbent brine solutions such as lithium chloride are used to remove moisture from the air. As