The standard rating conditions for unit air conditioners, other than the self-contained type are identical to those in Table 1 except the entering wet-bulb temperature for cooling is expressed as 50 per cent relative humidity (66.7 F wet-bulb) instead of 67 F wet-bulb temperature. In addition, the saturated suction refrigerant temperature for comfort cooling is specified at 40 F. This condition is omitted from Table 1 for self-contained units as immaterial in the rating of a unit that includes the evaporator and condensing unit.

UNIT AIR COOLERS

This type of unit is primarily intended to perform the main function of cooling air, with humidity control a secondary function within the limitations of the design. The main application of this equipment is in process and product refrigeration such as cold storage warehousing, fruit and vegetable packing, in breweries, and in wholesale and retail food markets; although some comfort cooling may be obtained by the use of a unit

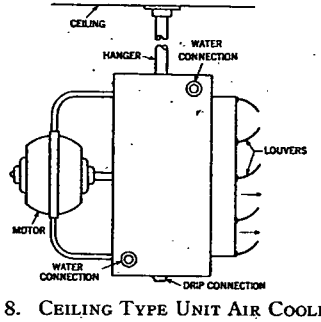

FIG. 8. CEILING TYPE UNIT AIR COOLER

similar in design to this type of unit as previously explained and as illustrated by Fig. 6.

Application of the unit method of air cooling with mechanical circulation is comparatively recent, being an improvement over the pipe or finned coil, which depended on gravity for circulation. Bunkers were sometimes constructed around the coils to direct the air flow and sometimes fans were used for forcing air over the coils. The location of the unit air cooler is usually within the refrigerated area, but the larger, blower type models may be remotely located.

Design and Performance

Greater application and use of commercial refrigeration has resulted from the development of the unit air cooler. Flexibility of design has permitted almost any condition to be met. By varying such physical features as the method of introducing the refrigerant into the coils, the depth of coil rows and area of their surfaces, and the air volume over the coils, the designer is able to produce a wide range of performances and to offer many desirable features not obtainable with the coil and bunker method. More uniform temperatures, high relative humidity, moderate

first cost and a minimum of installation expense are likewise factors in their development.

New uses have appeared for unit air cooler application in industrial and commercial processes involving both the raw materials and finished product, where the maintenance of low temperatures is a necessary part of these processes. Of particular interest is the new field of extreme low temperature application where many new uses for refrigeration are being found.

Types of Units

The two standard types are the suspended or ceiling type, and the vertical or floor mounted type. There are variations of this such as the

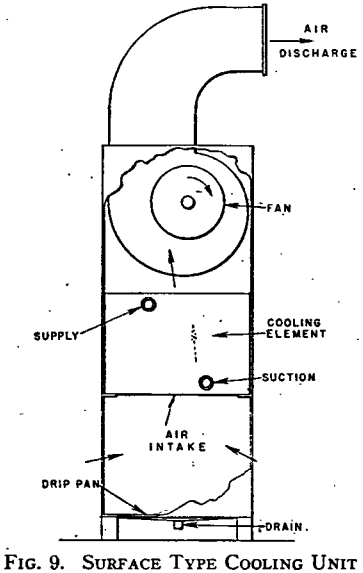

FIG. 9. SURFACE TYPE COOLING UNIT

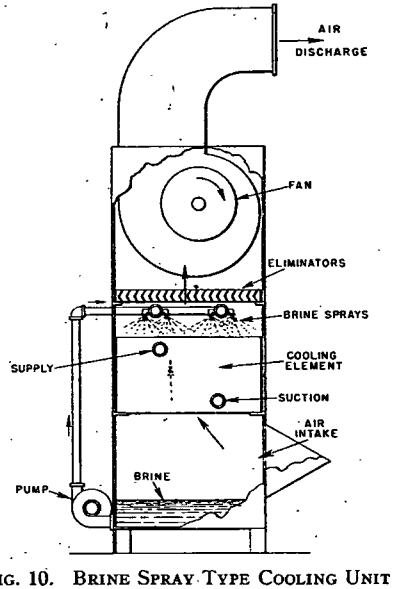

FIG. 10. BRINE SPRAY TYPE COOLING UNIT

panel type which is wall mounted and arranged to take in air from the lower section and discharge it from the upper section.

The ceiling type has the appearance of a unit heater, with its propeller type fan blowing air through a bank of coils as shown in Fig. 8. Singly or in combination, they are easily installed and occupy little or no useful space. Alterations may be accomplished with little cost by relocating units or adding additional ones for increased capacity.

The floor mounted types employ blower type fans, as their air deliveries are higher and their locations may be remote from the space to be refrigerated. This type of unit is illustrated by Fig. 9. Air velocities and volumes must be designed for the individual application. This type of unit may employ a pump to spray a eutectic solution over the coils for the purpose of avoiding frosting as shown in Fig. 10.