PLAINTIFF'S EXHIBIT

ASA-1728

CLEARING THE AIR

Air Pollution Control Division
Wheelabrator-Frye Inc.

DMART 266

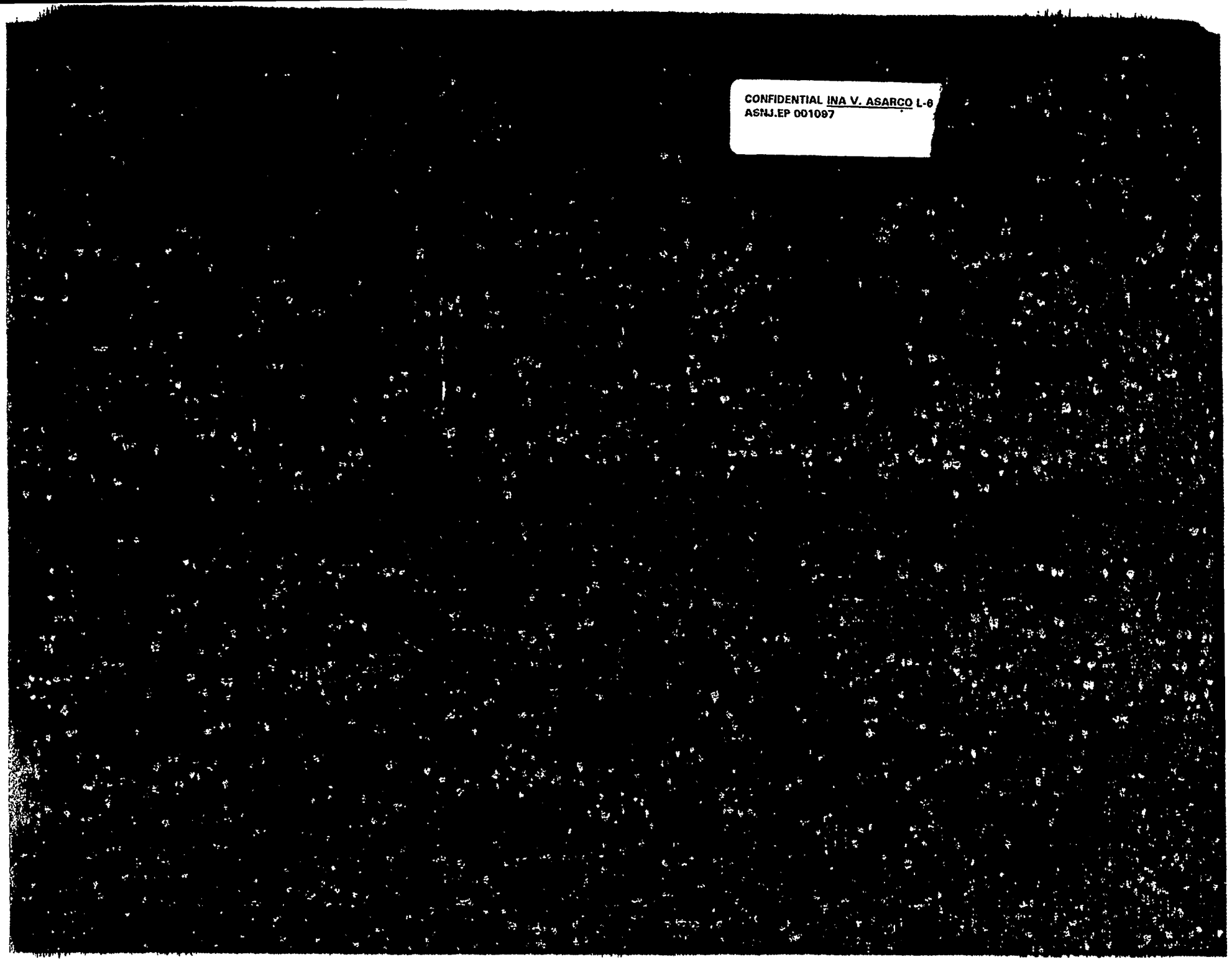
CONFIDENTIAL INA V. ASARCO L-6
ASNJ.EP 001097

OPERATION AND SERVICE MANUAL
for
Air Pollution Control Unit

TYPE OF UNIT: WHEELABRATOR-FRYE DUSTUBE DUST COLLECTOR
SIZE NO. 1217, MODEL 171, SERIES 5S

PROPRIETOR: ASARCO INCORPORATED
120 BROADWAY
NEW YORK, N.Y. 10005

CONTRACT / SERIAL NO.: 2412

CUSTOMER ORDER NO.: 16H-0348

DATE OF ISSUE: MAY 1976

Designed and Manufactured by:

Air Pollution Control Division
Wheelabrator-Frye Inc.
600 Grant Street, Pittsburgh, Pennsylvania 15219

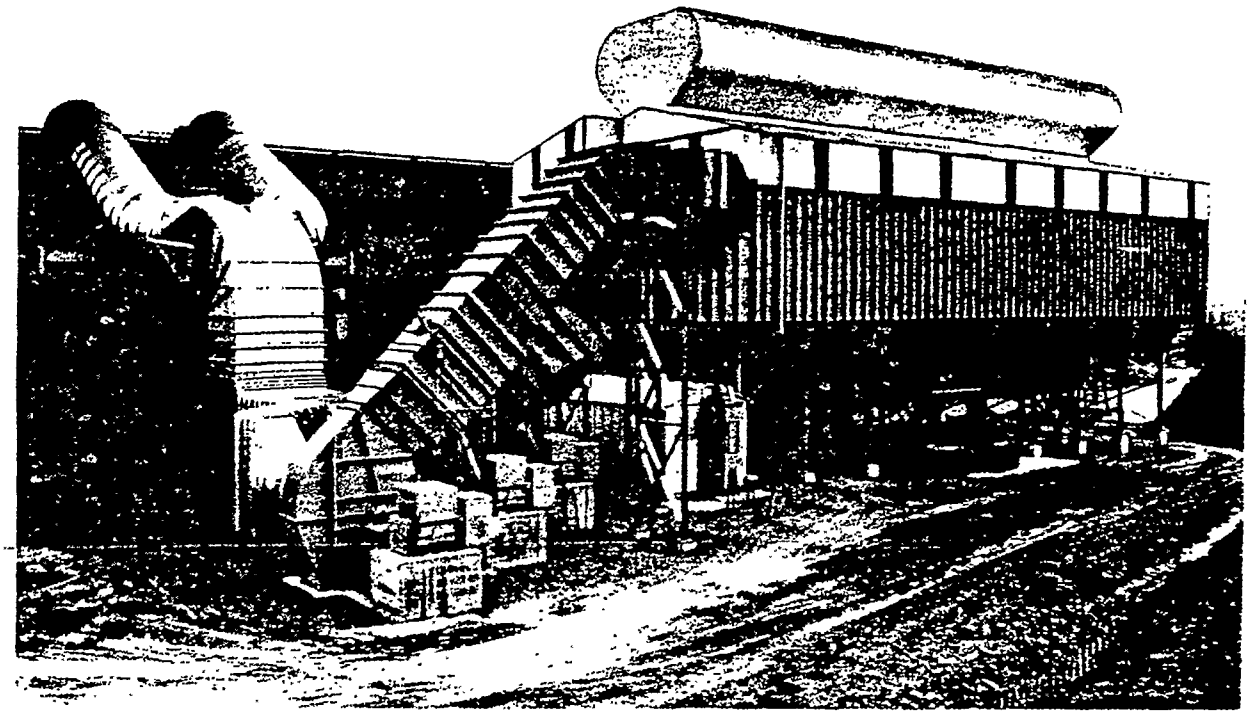

A TYPICAL STRUCTURAL SHAKER DUST COLLECTOR BAGHOUSE FOR STEEL MILL APPLICATION, DESIGNED AND ENGINEERED BY WHEELABRATOR-FRYE

Wheelabrator-Frye Inc. is one of the world's foremost suppliers of standard and custom-made pollution-control equipment, including "DUSTUBE" dust collectors for handling dry particulates; the "ULTRA-FILTRATION" process for removal of the most minute particulates suspended in gas or air; "ULTRA-JET" fabric filters with pulse-type bag cleaning; ULTRA-DYNE" units for removing liquid particulates; and Wheelabrator Lurgi Electrostatic Precipitators.

Wheelabrator-Frye Environmental Systems ---

--- working to solve environmental problems.

Wheelabrator-Frye Inc. has built a complete systems capability to design, engineer, erect, operate, maintain, and finance large process pollution control facilities. It can draw on the experience of over 68 years in pollution control and 20,000 air pollution control systems throughout North America and 22 foreign countries.

This organization is the result of a 1971 merger that brought together and concentrated the best elements of four operating companies. In 1972, a very important part of the team was added—the Rust Engineering Company, with a proven record of accomplishment in the design, erection, and maintenance of many industrial processes including pollution control equipment, incinerators, and chimneys.

Wheelabrator's new high-technology systems organization is further enhanced by working agreements with two other world leaders in specialized, proprietary pollution control equipment—Von Roll A. G. of Zurich, Switzerland, and Lurgi Apparate Technik GmbH of Frankfurt, West Germany.

The agreement with Von Roll has made available new knowledge and technical applications in the design and operation of refuse incineration systems, including the recycling of heat energy from refuse and the reclamation of materials from waste.

Lurgi brings to this new combination an exclusive license to manufacture and market their electrostatic precipitators in North America, and a far-reaching agreement for the introduction of their proprietary water and waste water handling systems into the U. S.

Wheelabrator-Frye has for a number of years accounted for 20-25% of the expanding U. S. fabric filter market, and 40% of the Canadian market. It is a multinational company with annual sales of over $218 million and its broad capabilities are demonstrated by the wide range of worldwide businesses and industries it serves, including steel mills, foundries, automotive plants, the cement, asbestos, chemical, pulp and paper industries, municipal incinerators, and many other pollution-related installations. This success has been brought about by Wheelabrator's comprehensive high-technology systems approach that assesses the customer's total environmental problems, designs and engineers pollution control facilities, services the facilities, supplies replacement parts, and provides financing arrangements when desired.

I CONTENTS

CONTENTS

PART II. INTRODUCTION

PART III. SYSTEM DESCRIPTION

Equipment Description
Bulletin APC-3 DUSTUBE Dust Collector

PART IV. INSTALLATION AND OPERATION

Erection Instructions for Pre-Engineered Dust Collector
Installation Instructions for Strap Top Bags on Three Prong Tube Hook
Installation Instructions for Nameplates
Instructions for Inspection and Maintenance of DUSTUBE Dust Collector Shaker Type
Instructions for Manometers
Instructions for Cleaning or Rebagging Pollution Control Units
Instructions for Applying Gasketing and Cements

PART V. PARTS LISTS

General Information
Ordering Information
Recommended Spare Parts List

PART VI. DRAWING LIST AND VENDOR'S LITERATURE

2412-1-900	General Assembly
1217-614, Rev. 1	Support Structure
1217-615	Support Structure
1217-642, Rev. 1	Erection Arrangement
1217-644	Erection Support Structure
1200-107, Rev.	Shaker Walkway
1200-110, Rev. 1	Cell Plate Walkway
1200-123	Ladder Standards
1200-641	Sections - Shaker Mechanism and Tube Suspension
1200-642	Arrangement - Shaker Mechanism and Tube Suspension
51X3451-03	Allis-Chalmers Motor Instructions
1200-596	12" Mader Slide Gate
1200-618	Installation of Manometers and Fittings for Pre-Engineered Dust Collectors
Bul. 10CAA25:215-1	Meriam Clean-Out U-Type Manometers
60B1588	Typical Wiring Drawing for Intermittent Dust Collector
T4200-123, Rev. C	Single Cycle Timer (NCC)
*24-700087-00	Dwyer Outline Dimension
*Bul. E-53	Dwyer Low Differential Pressure Switches

*Revised 7/19/76

II INTRODUCTION

II. INTRODUCTION

This document contains information on the installation, operation and servicing of Wheelabrator-Frye air pollution control equipment purchased in February of 1976 by ASARCO Incorporated under Wheelabrator-Frye Contract No. 2412 and Customer Order No. 16H-0348.

This unit will be installed at ASARCO Inc., El Paso, Texas.

III SYSTEM DESCRIPTION

III. SYSTEM DESCRIPTION

The air pollution control equipment ordered under this contract uses a Wheelabrator-Frye "DUSTUBE" Dust Collector for the filtration of solids suspended in gas.

In this process, large fans suck the dust-laden gas or air into cloth filter tubes (DUSTUBES) and force-filter it through the fabric to the outside.

Intermittently the fans are shut down and the filtered dust is removed from the inside of bags by the shaker mechanism.

The dust collecting unit ordered under this contract is designated as a single module, Size 1217F, Model 171, Series 5S with 3,916 sq. ft. of cloth area.

This equipment is designed to filter 8,000 ACFM of coke breeze, lime, sodium sulphate, sodium bicarbonate, return salt, etc., dust laden air at an air-to-cloth ratio of 2.04:1.

The specific items of equipment ordered under this contract are related as follows:

Module Construction:

#10 Gauge H.R.S. wleded, stiffened to withstand 20" w.g.
Painted on outside surfaces with high temperature primer.
Three section fabrication (upper, lower, and hopper).
One piece shop assembled for rail shipment.

Upper housing with pre-installed tubular shaker mechanism.
24" flanged outlet stub, roof mounted.

Lower housing with snap ring cell plate floor welded air tight.
20" x 48" hinged access door.
Sidewall tube relief.
12" access walkway.

Hopper with 60° side slope.
12" x 12" flanged discharge as noted above.
18" x 30" bolted access door.
24" flanged stub inlet.
Internal air diffusion plate.

Shaker Assembly:

2 H.P., 1800 RPM, TEFC 230/460 volt, 50 cycle, 3 phase shaker motors.
V-belt drives and guards.
Motor mounting brackets and eccentric shaft assemblies.

Field Material:

10" individual compartment U-tube manometer with 25' of tubing.
Necessary nuts, bolts, and gasketing required for field assembly.

Service Platforms: 30" wide walkways fabricated from 1" x 3/16" bar grating.
Bar and rod handrails conform to OSHA regulations.
One shaker level walkway.
One access door level walkway.
All walkways shipped for field assembly.

Access Ladder: Caged access ladder provides access to shaker and door level walkways from grade to conform to OSHA regulations.

Support Steel: Support structure designed to support module(s) with 8'-0" clearance under final discharge valve.
Steel designed with cross bracing for 100 MPH wind load, Seismic Zone 3, and 40% hopper loaded with dust weighing 75 lbs. per cu. ft.
See general arrangement drawing for column spacing.

DUSTUBES: (204) Woven Cotton Sateen
Style 101-02 Siliconized Surface
5-1/4" dia. x 171" long with strap top
Maximum operating temperature - 180°F
9.0 oz./sq.yd.
10-15 CFM permeability
Snap ring bottom cuff

Timer: One (1) polyflex timer in NEMA XII enclosure.

Slide Gate: One (1) 12" sq. manually operated slide gate.

The Purchaser will provide the following materials or services:

Receiving, unloading and storing material at jobsite.
All federal, state and local taxes.
Building permits and clearances.
All building permits, clearances, and FIA system approval license fees for state and local agencies.
Erection and installation labor, including bags.
Foundations, including anchor bolts.
Means of conveying collected dust from final discharge valves.
Electrical wiring. (If WFI control panel included, purchaser need only furnish electrical wiring between control panel terminal strips and remote electrical equipment.)
Ventilation piping, hoods and ductwork.
Control panel, including starters, pushbuttons, relays, operating lights transformer and a line disconnect switch.
Air moving equipment. In sizing fan, allow 6" SPWG pressure drop across dust collector.
Inlet ductwork.
Outlet ductwork.

Weather protection for equipment where required.
Means of preventing condensation, including insulation or auxiliary heat, if required.
Temperature contorl instruments.
All other items not specifically detailed and listed in our technical proposal.

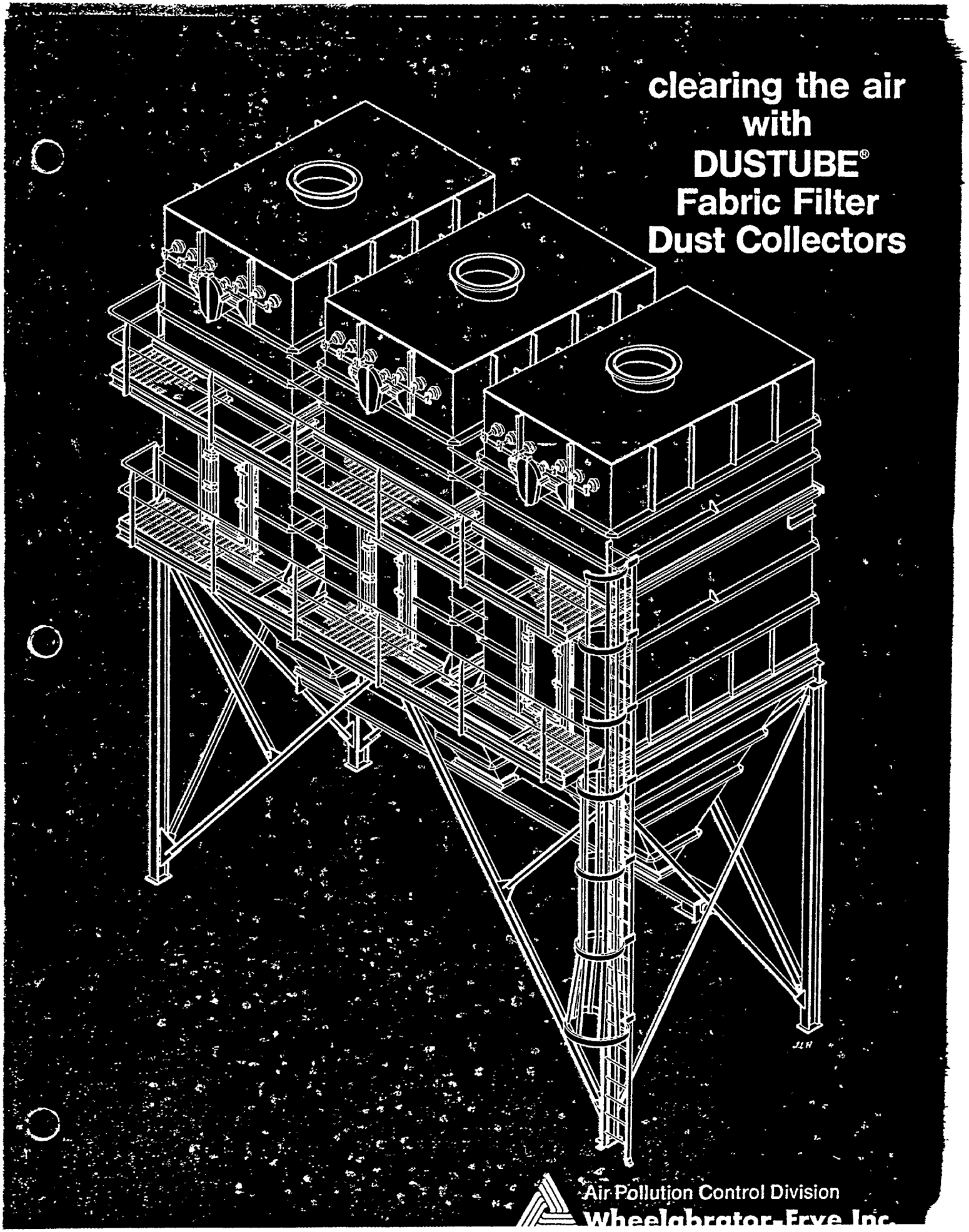

clearing the air with DUSTUBE® Fabric Filter Dust Collectors

Air Pollution Control Division
Wheelabrator-Frye Inc.

Efficient DUSTUBE® Fabric Filter Collectors

Wheelabrator-Frye Dustube series fabric filter dust collectors are the result of over 35 years' experience in designing and manufacturing more than 6,000 units.

Unit size has ranged from as small as 500 cfm up to 5,000,000 cfm . . . the world's largest fabric filter dust collector. Dustube collectors are operating in virtually every type of industry. This wide experience is not limited to design and manufacture. It includes in-house engineering and testing facilities, and in-house filter tube manufacturing.

This total expertise permits the Air Pollution Control Division of Wheelabrator-Frye to offer Dustube collectors which will meet the most stringent air pollution control codes, and yield uniform collection efficiencies over 99% . . . on *any* dry dust, regardless of particle size.

COVER: Three-module, size 1224F, Model 171 Continuous Automatic Dustube Collector.

9 ways better

1. Maximum Efficiency Maintained

High efficiency is uniformly constant throughout wide variations in particle size, filtration velocity and dust loading.

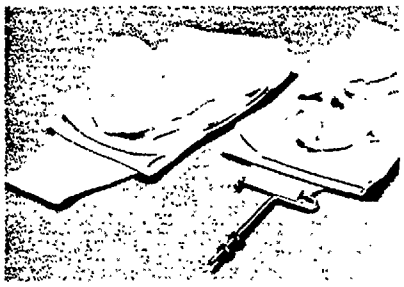

2. Maximum Cloth Life

No metal touches or abrades the filtering area of the cloth tubes. Because the tubes are adjustable, the cloth can be properly tensioned. The unique Dustube shaking action is highly effective without subjecting the cloth tubes to unnecessary strain.



3. Simple Installation and Maintenance

One man working alone on the clean air side can install or replace tubes. No special tools are required. Cloth tubes can be replaced in groups during off hours, causing no interruption in the use of the unit. Bag change-out time is minimized.

4. Easy Inspection

A walkway is provided on the clean air side of each collector module. Inspection can be made during operation in many applications.

5. No Bridging or Clogging

Cloth tubes are of 5¼-inch diameter with flexible walls. This feature, combined with the patented Dustube shaking mechanism, prevents clogging or bridging in even the most severe applications.



6. Simplified Cleaning

No auxiliary reversing fans or expensive compressed air is required because of the high efficiency of the Dustube shaking mechanism.

7. Lower Power Costs

The Dustube design gives minimum static pressure loss, resulting in lower H. P. requirement. This is due to ample expansion areas on both the clean and the dirty air sides, plus high efficiency of the shaking mechanism.



8. Handles Hot and/or Corrosive Gases

Dustube collectors are readily applicable in severe heat installations such as glass furnaces, cement kilns and coolers, and electric arc furnaces . . . with temperatures up to 550°F.

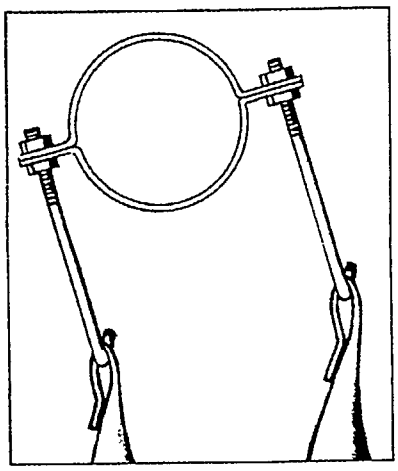

9. Research and Testing

Tests can be run on dust and fume samples in the Wheelabrator-Frye laboratory to determine air-to-cloth ratios, back pressure, bag shaking cycles and general compatibility of the Dustube collector to the sample.

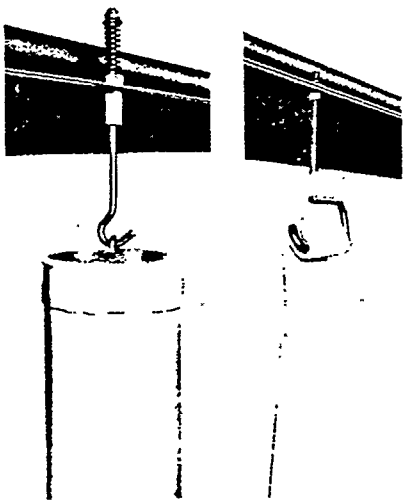

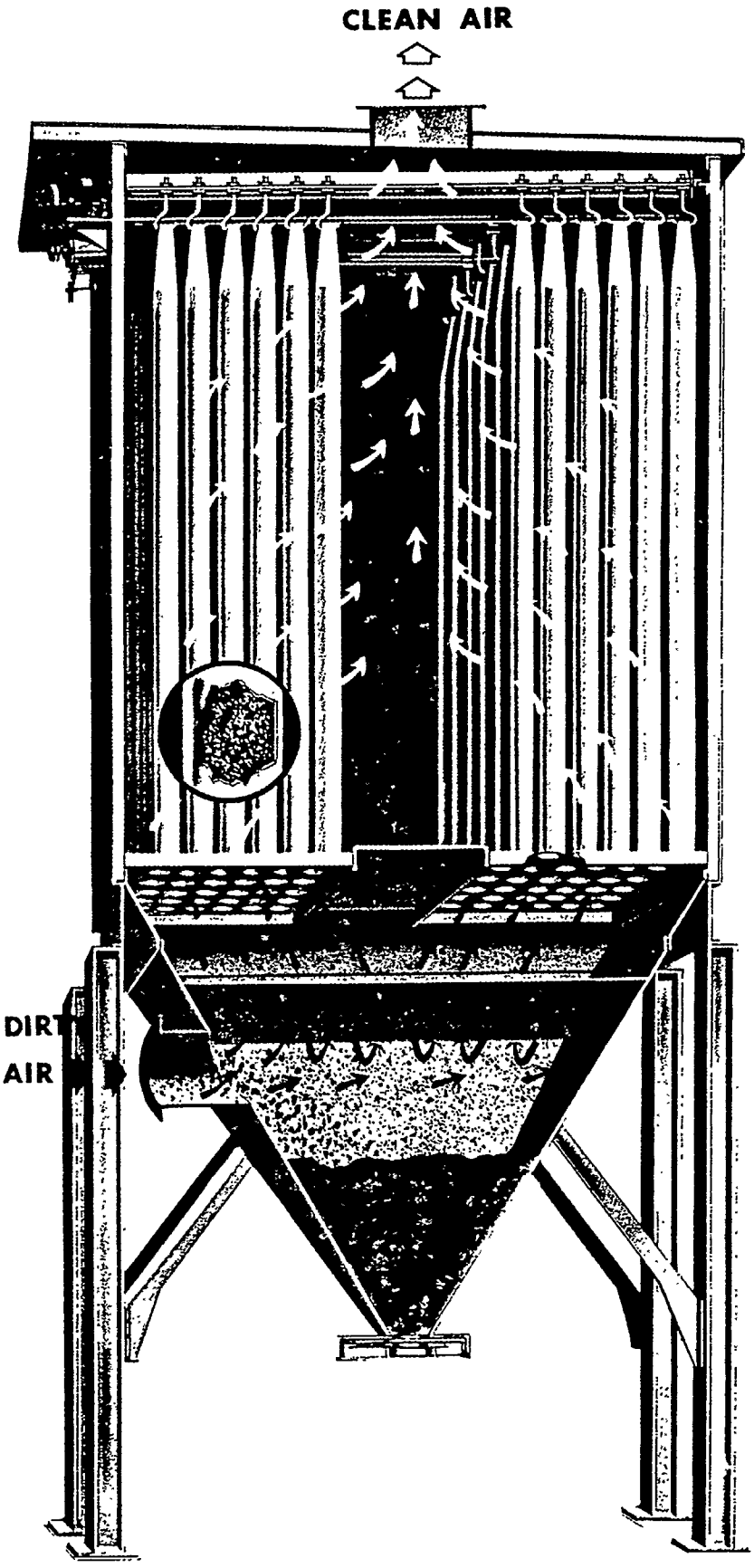

Economical Standard DUSTUBE® Module

The 5-inch Dustube collector is available as an all-welded module in three sizes, and two tube lengths.

All units are supplied with cell plates and shaker mechanism factory assembled and inspected to ensure minimum field erection costs and proper alignment of all components.

Modules can be shipped as either a completely-welded, one-piece unit; or as three separate sections for easy handling in tight erection areas. When shipped as three sections, the hopper, lower housing and upper housing are shipped with all internal components mounted. Only two field joints are required to complete assembly. Factory assembly and inspection ensures trouble-free operation.

Standard construction is 10-gauge plate, stiffened for 20-inch WG. operating pressure (the strongest in the industry). Support steel is available as a standard option, with either four-foot or eight-foot clearance below the hopper discharge valve. External walkways and ladders are available to provide access at the housing door and shaker mechanism levels. All walkways and ladders meet rigid OSHA requirements.

Hinged access door dimensions of 20- x 48-inch are standard on all Dustube modules. All modules are supplied with one-piece, die-drawn cell plates for use with snap-ring tubes. The shaker mechanism is a heavy-duty, tubular type. For ease of inspection, all moving parts are located outside the module.

A complete range of auxiliaries such as control panels, inlet and outlet valves, and hopper discharge valves, is available.

UNIT	1224-F		1220-F		1217-F	
MODEL	126	171	126	171	126	171
Nº OF BAGS	288	288	240	240	204	204
SQ FT /CLOTH AREA	4032	5530	3360	4608	2856	3916
APPROX WT / UNIT (SEE NOTE Nº 5)	9,187	10,422	7,700	8,830	7,160	8,198
A	12'-6 1/4"	12'-6 1/4"	10'-6 1/4"	10'-6 1/4"	9'-6 1/4"	9'-6 1/4"
B	6'-3 1/8"	6'-3 1/8"	5'-3 1/8"	5'-3 1/8"	4'-9 1/8"	4'-9 1/8"
C	15'-9 3/8"	15'-9 3/8"	14'-0 5/8"	14'-0 5/8"	13'-2 1/8"	13'-2 1/8"
D	19'-9 3/8"	19'-9 3/8"	18'-0 5/8"	18'-0 5/8"	17'-2 1/8"	17'-2 1/8"
E	10'-7 3/8"	10'-7 3/8"	8'-10 5/8"	8'-10 5/8"	8'-0 1/8"	8'-0 1/8"
F	5'-3 1/4"	9'-0 1/4"	5'-3 1/4"	9'-0 1/4"	5'-3 1/4"	9'-0 1/4"
G	7'-5 7/8"	7'-5 7/8"	7'-5 7/8"	7'-5 7/8"	7'-5 7/8"	7'-5 7/8"
H	12'-9 1/8"	16'-6 1/8"	12'-9 1/8"	16'-6 1/8"	12'-9 1/8"	16'-6 1/8"
J	28'-6 1/2"	32'-3 1/2"	26'-9 3/4"	30'-6 3/4"	25'-11 1/4"	29'-8 1/4"
K	32'-6 1/2"	36'-3 1/2"	30'-9 3/4"	34'-6 3/4"	29'-11 1/4"	33'-8 1/4"
M	6'-3"	6'-3"	5'-3"	5'-3"	4'-9"	4'-9"
N	12'-6"	12'-6"	10'-6"	10'-6"	9'-6"	9'-6"
P	3'-6"	3'-6"	3'-4"	3'-4"	3'-2"	3'-2"
Q	2'-5 1/4"	2'-5 1/4"	1'-11 1/4"	1'-11 1/4"	1'-7 1/4"	1'-7 1/4"
R	6'-0"	6'-0"	5'-0"	5'-0"	4'-6"	4'-6"
S	7'-3"	8'-3"	7'-3"	8'-3"	7'-3"	8'-3"
T	2'-9 3/4"	2'-9 3/4"	2'-3 3/4"	2'-3 3/4"	1'-11 1/8"	1'-11 1/8"
U	28	28	20	20	20	20
V	13/16"	13/16"	11/16"	11/16"	11/16"	11/16"
W	2'-9 3/4"	2'-9 3/4"	2'-6 3/4"	2'-6 3/4"	2'-3 3/4"	2'-3 3/4"
X	28	28	24	24	20	20
Y	13/16"	13/16"	11/16"	11/16"	11/16"	11/16"
Z	2'-6"	2'-6"	2'-3"	2'-3"	2'-0"	2'-0"

Note: Dimensions are subject to change without notice.

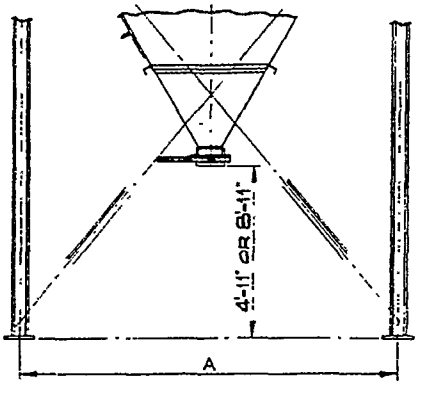

9" SLIDE GATE ASSEMBLY

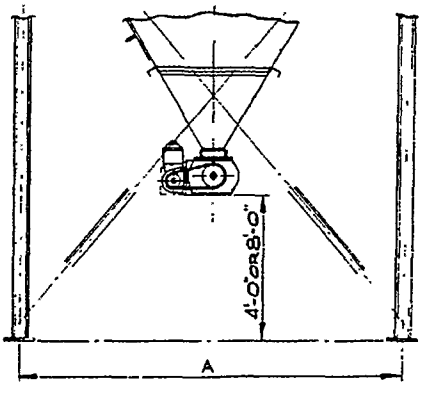

9" ROTARY VALVE ASSEMBLY

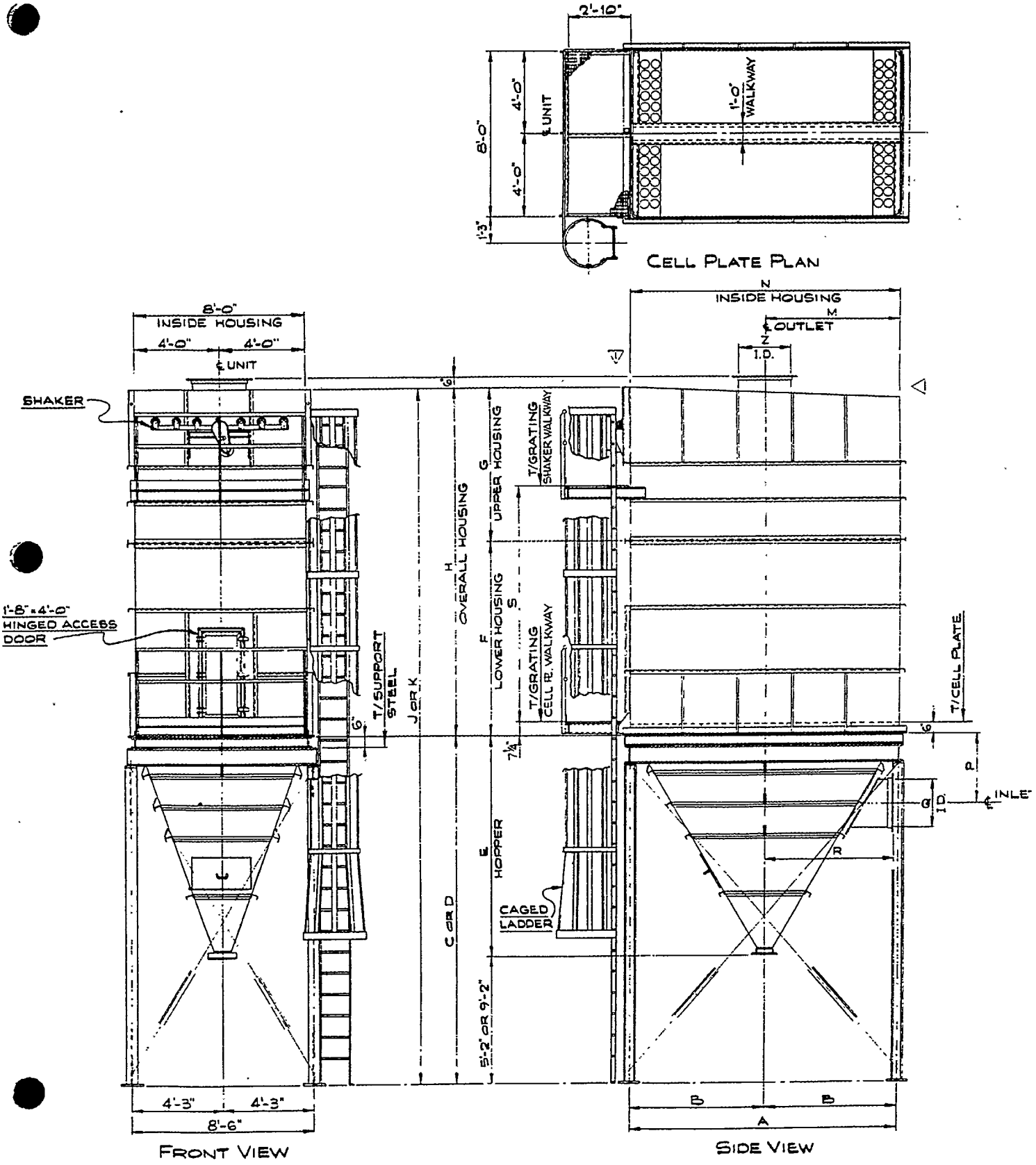
2'-10"
8'-0"
4'-0"
℄ UNIT
4'-0"
1'-3"
1'-0" WALKWAY
CELL PLATE PLAN
8'-0"
INSIDE HOUSING
4'-0"
4'-0"
℄ UNIT
N
INSIDE HOUSING
M
℄ OUTLET
Z
I.D.
SHAKER
1'-8"x4'-0"
HINGED ACCESS
DOOR
T/GRATING
SHAKER WALKWAY
G
UPPER HOUSING
H
OVERALL HOUSING
F
LOWER HOUSING
S
T/GRATING
CELL RE. WALKWAY
T/SUPPORT
STEEL
J OR K
T/CELL PLATE
7¼"
P
Q
I.D.
℄ INLET
R
E
HOPPER
C OR D
CAGED
LADDER
5'-2" OR 9'-2"
4'-3"
4'-3"
8'-6"
B
B
A
FRONT VIEW
SIDE VIEW

Reliable Large-Volume Standard DUSTUBE® Collectors

For the big job, there are large-volume Dustube modules, with all of the features of the Standard Modules described on page 4.

Designed for 20-inch WG. operating pressure, these modules are shipped in three sections, with all internal components factory-assembled. Only two field joints are required to complete the installation.

Support steel, catwalks, ladders and screw conveyors are all available for these units, as is a complete range of auxiliaries.

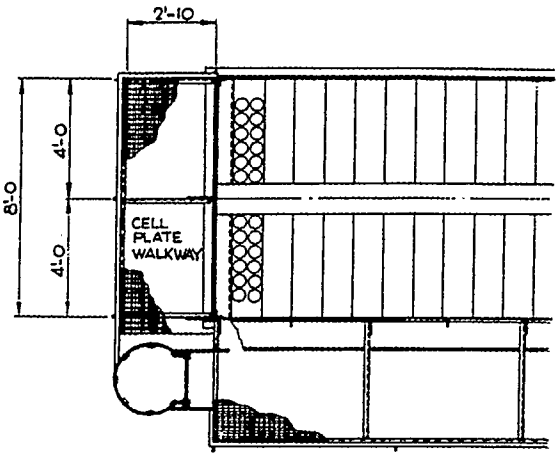

CELL

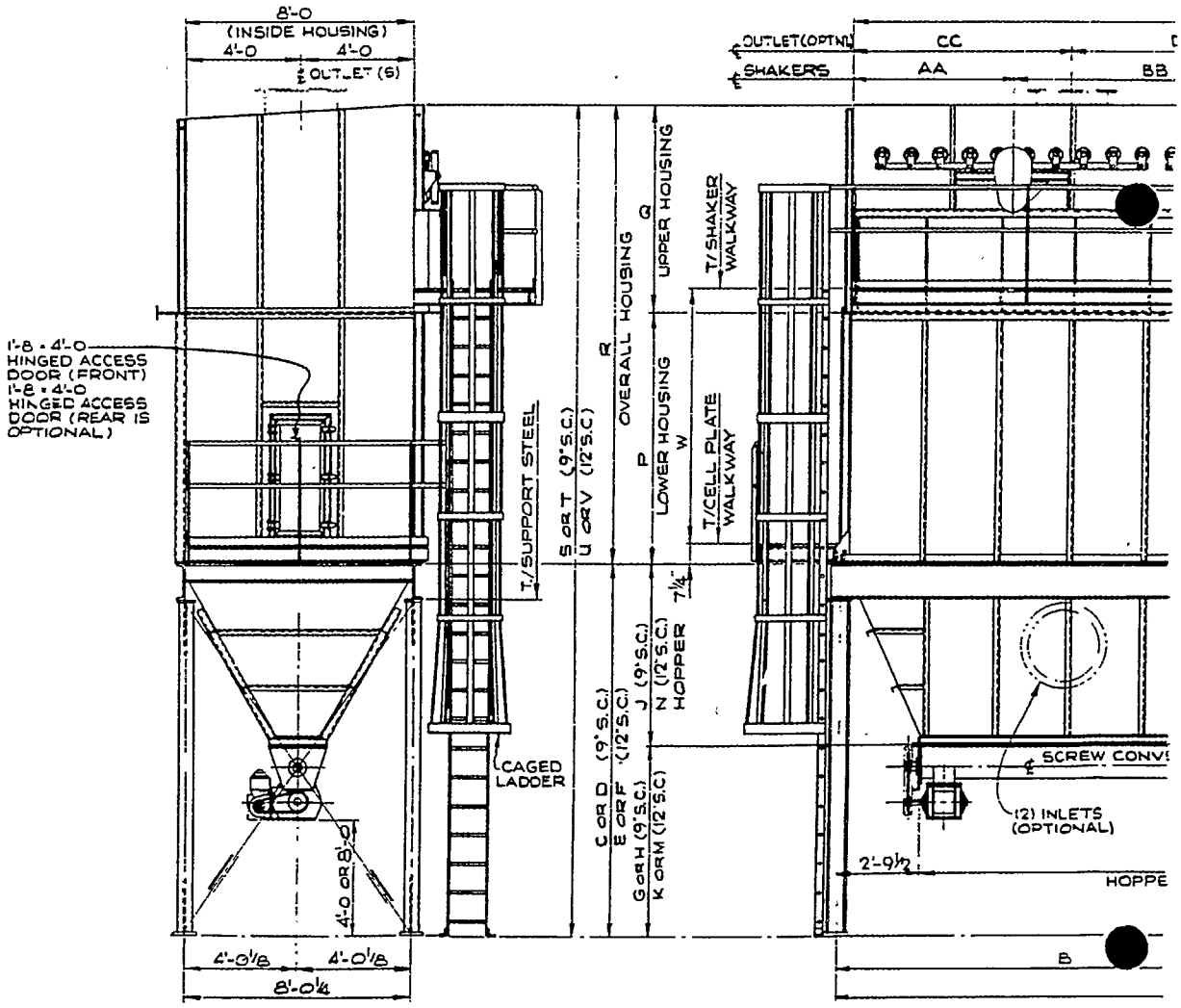

FRONT VIEW

UNIT	1244-F		1252-F		1260-F	
MODEL	126	171	126	171	126	171
Nº. OF BAGS	528	528	624	624	720	720
SQ. FT./CLOTH AREA	7,392	10,138	8,736	11,980	10,008	13,824
APPROX WT/UNIT (SEE NOTE Nº 4)	15,673	17,512	19,480	21,489	21,801	24,011
A	23'-7	23'-7	27'-7	27'-7	31'-7	31'-7
B	—	—	—	—	15'-9½	15'-9½
C	13'-4⅛	13'-4⅛	13'-4⅛	13'-4⅛	13'-4⅛	13'-4⅛
D	17'-4⅛	17'-4⅛	17'-4⅛	17'-4⅛	17'-4⅛	17'-4⅛
E	13'-8⅞	13'-8⅞	13'-8⅞	13'-8⅞	13'-8⅞	13'-8⅞
F	17'-8⅞	17'-8⅞	17'-8⅞	17'-8⅞	17'-8⅞	17'-8⅞
G	6'-3¼	6'-3¼	6'-3¼	6'-3¼	6'-3¼	6'-3¼
H	10'-3¼	10'-3¼	10'-3¼	10'-3¼	10'-3¼	10'-3¼
J	7'-0⅞	7'-0⅞	7'-0⅞	7'-0⅞	7'-0⅞	7'-0⅞
K	6'-10⅝	6'-10⅝	6'-10⅝	6'-10⅝	6'-10⅝	6'-10⅝
M	10'-10⅝	10'-10⅝	10'-10⅝	10'-10⅝	10'-10⅝	10'-10⅝
N	6'-10¼	6'-10¼	6'-10¼	6'-10¼	6'-10¼	6'-10¼
P	5'-5½	9'-2½	5'-5½	9'-2½	5'-5½	9'-2½
Q	6'-9⅛	6'-9⅛	6'-9⅛	6'-9⅛	6'-9⅛	6'-9⅛
R	12'-2⅝	15'-11⅝	12'-2⅝	15'-11⅝	12'-2⅝	15'-11⅝
S	25'-6¾	29'-3¾	25'-6¾	29'-3¾	25'-6¾	29'-3¾
T	29'-6¾	33'-3¾	29'-6¾	33'-3¾	29'-6¾	33'-3¾
U	25'-11½	29'-8½	25'-11½	29'-8½	25'-11½	29'-8½
V	29'-11½	33'-8½	29'-11½	33'-8½	29'-11½	33'-8½
W	5'-7⅞	9'-4⅞	5'-8¼	9'-5¼	5'-8¼	9'-5¼
X	2'-8	2'-8	2'-8	2'-8	2'-8	2'-8
Y	2'-11¼	2'-11¼	2'-11¼	2'-11¼	2'-11¼	2'-11¼
Z	18'-0	18'-0	22'-0	22'-0	26'-0	26'-0
AA	3'-6	3'-6	5'-6	5'-6	5'-6	5'-6
BB	8'-0	8'-0	8'-0	8'-0	10'-0	10'-0
CC	5'-0½	5'-0½	7'-3	7'-3	5'-2	5'-2
DD	6'-5½	6'-5½	6'-3	6'-3	10'-4	10'-4
EE	23'-0	23'-0	27'-0	27'-0	31'-0	31'-0

Note: Dimensions are subject to change without notice.

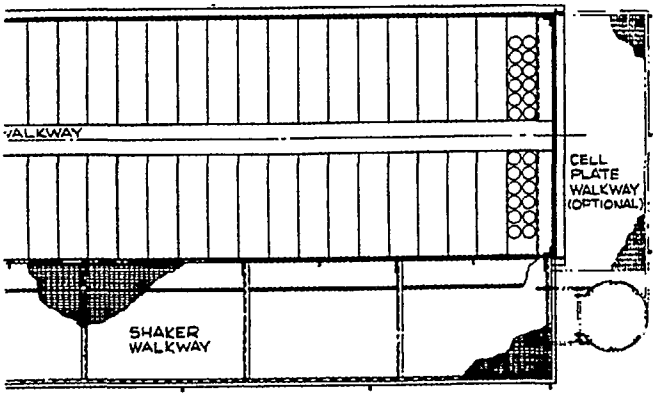

LATE & WALKWAY PLAN

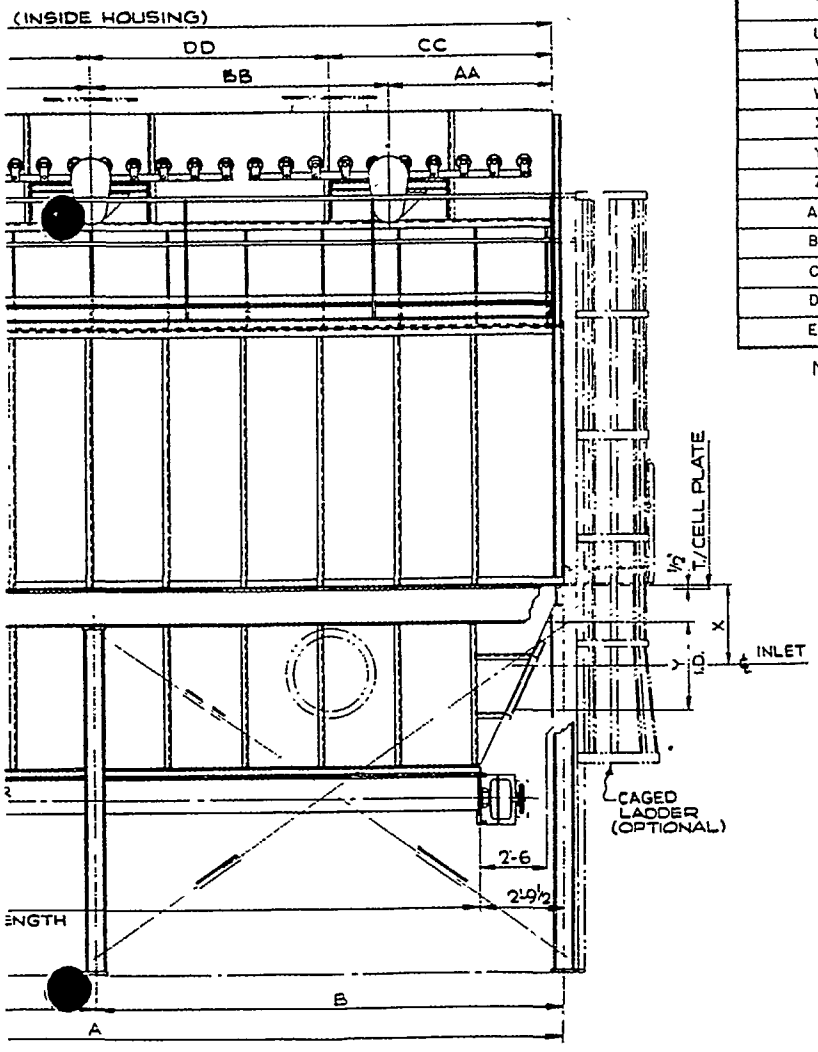

SIDE VIEW

Dependable Continuous Automatic DUSTUBE® Collectors

The Standard 5-inch modular Dustube collector (described on pages 3 & 4) is designed for use in continuous automatic service.

Standard components offer an automatic collector with net cloth area

from 5,712 sq. ft.
(3 module, size 1217F, Model 126)

to 49,770 sq. ft.
(10 module, size 1224F, Model 171).

These standard modules are available with pyramid or semi-trough hoppers, and either screw conveyors or individual rotary discharge valves. Support steel is available to provide either four-foot or eight-foot clearance under the final discharge valve.

Inlet and outlet valves with automatic actuators are available to isolate each module for cleaning.

Inlet and/or outlet manifolds can be furnished to provide a single connecting point to the collector system.

Standard control panels are available which will automatically guide the collector through its complete cleaning cycle. These control panels can also control exhaust fans and screw conveyors; as well as actuating the damper valves and shaker mechanism. A safety lock-out switch can be included to allow inspection of any module while the other modules continue through their cycles.

Continuous catwalks are available for access to the door and shaker mechanism levels. Designed to meet OSHA requirements, they are available with caged access ladders.

Cloth Area Model 126

No.	1217 F 204 Bags	1220 F 240 Bags	1224 F 288 Bags
1	2,856	3,360	4,032
2	5,712	6,720	8,064
3	8,568	10,080	12,096
4	11,424	13,440	16,128
5	14,280	16,800	20,160
6	17,136	20,160	24,192
7	19,992	23,520	28,224
8	22,848	26,880	32,256
9	25.704	30,240	36,288
10	28,560	33.600	40,320

Cloth Area Model 171

No.	1217 F 204 Bags	1220 F 240 Bags	1224 F 288 Bags
1	3,916	4,608	5,530
2	7,832	9,216	11,060
3	11,748	13,824	16,590
4	15,664	18,432	22.120
5	19,580	23,040	27,650
6	23,469	27,648	33,180
7	27,412	32,256	38,710
8	31,328	36,864	44,240
9	35,244	41,472	49,770
10	39,160	46,080	55,300

A typical Continuous Automatic Dustube Collector.

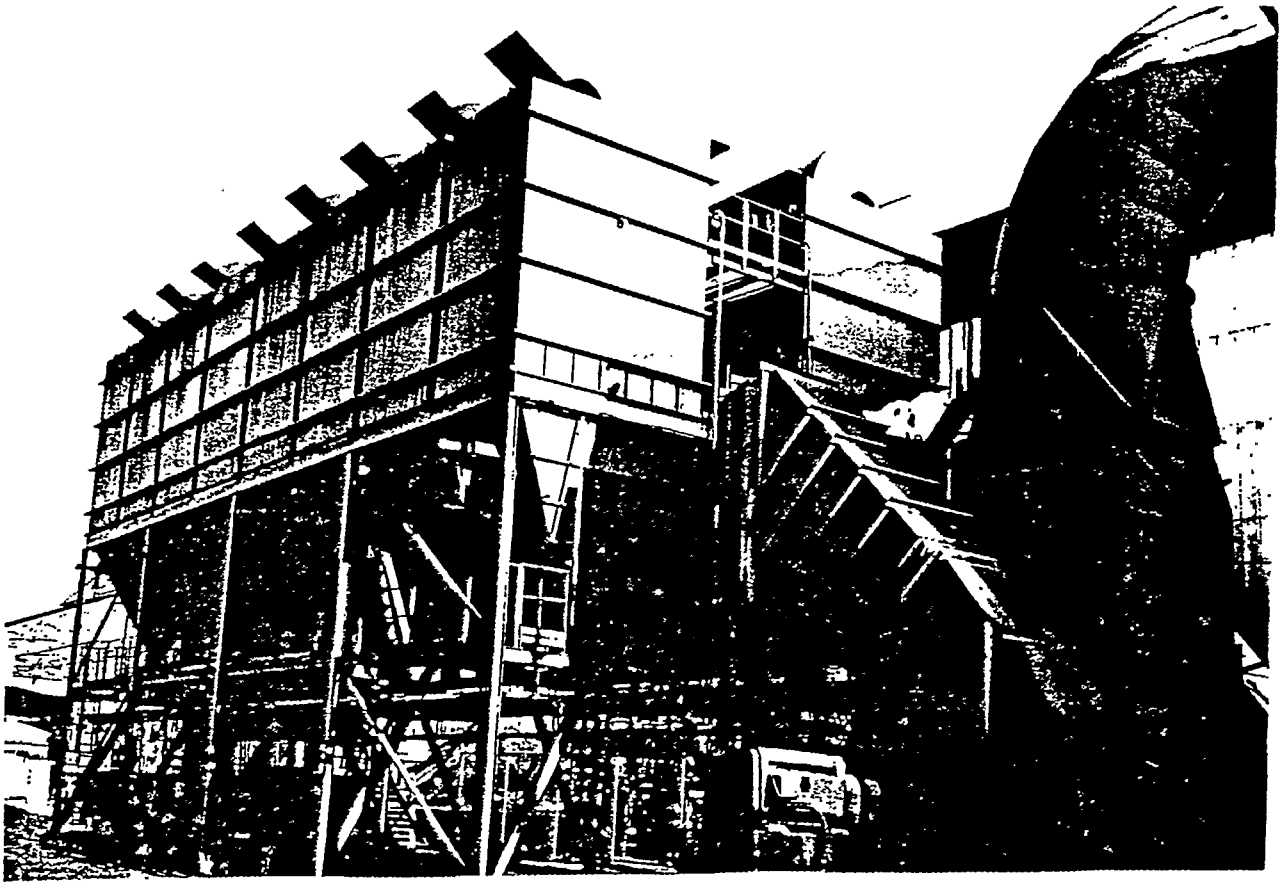

Pre-Assembled DUSTUBE® Collectors

Model 70-AC & 112-AC

Pre-assembled Dustube collectors are compact, economical unit-type fabric filters. Units are shipped completely assembled. They offer the quickest and easiest field installation.

Units combine the efficiencies of the basic Dustube design with the added advantage of requiring no field assembly. Several pre-assembled units may be installed together, rather than one large central collector, making further savings in installation costs and economizing in ductwork and power requirements.

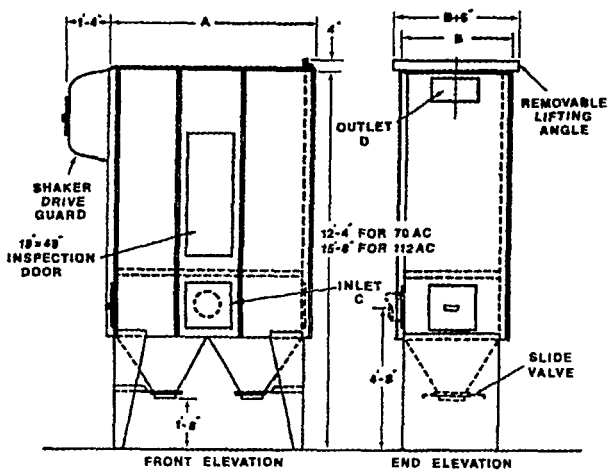

Specifications

Size	Sq. Ft. of Cloth		Capacity C.F.M. @ 3:1		No. of Tubes	No. of Hoppers	Refer To Lettering On Drawing						Net* Wt. Pounds	
							Lgth. "A"	Width "B"	"C" Inlet		"D" Outlet			
	70AC	112AC	70AC	112AC					70AC	112AC	70AC	112AC	70AC	112AC
3	274	N.A.	822	N.A.	36	1	3'-6"	3'-6"	7" Dia.	N.A.	9" x 12"	N.A.	1540	N.A.
4	365	N.A.	1095	N.A.	48	1	4'-6"	3'-6"	9" Dia.	N.A.	9" x 12"	N.A.	1815	N.A.
6	547	893	1641	2679	72	2	6'-6"	3'-6"	10" Dia.	13" Dia.	9" x 18"	9" x 18"	2255	2711
8	730	1190	2190	3570	96	2	8'-6"	3'-6"	11" Dia.	14" Dia.	9" x 18"	9" x 18"	2585	3165
5D	912	1488	2736	4464	120	4	5'-6"	6'-6"	13" Dia.	2@11"	9" x 18"	2@9" x 18"	2985	3660
6D	1094	1786	3282	5358	144	4	6'-6"	6'-6"	14" Dia.	2@12"	9" x 18"	2@9" x 18"	3425	4100
8D	1460	2380	4380	7140	192	4	8'-6"	6'-6"	14" Dia.	2@14"	9" x 18"	2@9" x 18"	3880	4710

N.A. = Not Available. *Add 150 lbs. to determine shipping weight.

Note: Dimensions are subject to change without notice.

Model 70-BC

This is the smallest and most economical unit-type collector in the line. It features a bin hopper and hand shaker. It is ideal for applications where relatively small volumes of air are to be handled and for light concentrations of dust, such as small grinder stands and small sandblast cabinets.

Model 70-BC collector incorporates the same basic principles and advantages of the larger Dustube collectors. It is ruggedly constructed, simple in design, highly efficient in operation, and is shipped completely pre-assembled.

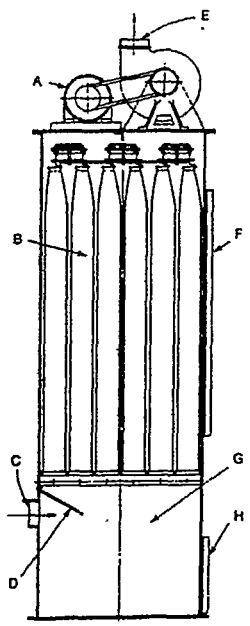

Specifications

Size	No. of Hoppers	Capacity C.F.M. at 3:1	Capacity C.F.M. at 4:1	No. of Tubes	Sq. Ft. of Cloth	Dimensions Length	Dimensions Width	Dimensions Height	Exhaust Connections Inlet	Exhaust Connections Outlet	Net* Weight
No. 1	1	273	364	12	91	1'-10"	2'-4"	9'-2"	4" Dia.	6" Dia.	375 lbs.
No. 2	1	546	728	24	182	2'-4"	3'-4"	9'-2"	6" Dia.	8" Dia.	550 lbs.

*Note: To determine shipping weight add 150 lbs.

Note: Dimensions are subject to change without notice.

KEY: A—Exhauster Motor and Fan (Extra); B—Cloth Tubes; C—Inlet; D—Baffle Plate; E—Clean Air Discharge; F—Inspection Door; G—Dust Hopper and Expansion Chamber; H—Clean-Out Door

Standard Accessories

Damper Valves

Compartments of continuous automatic-type Dustube collectors are isolated for periodic cleaning, using one of the damper valve arrangements illustrated. Wheelabrator fabricated square valves are available with wipers of neoprene, asbestos, or other suitable material, depending upon operating conditions which would affect a good seal. These valves are available with either air cylinder operators or electric-motor drives.

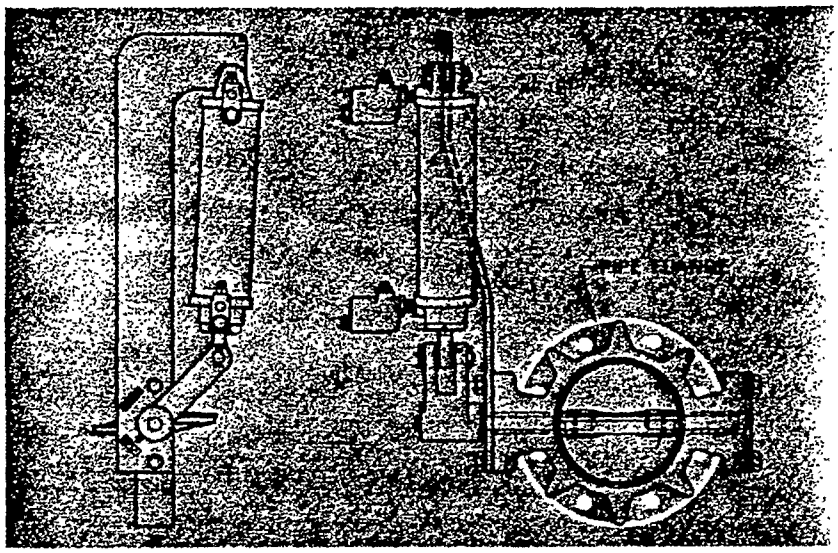

Plate-Type Damper Valve

The Plate-Type Damper Valve has been used dependably on hot, dusty and corrosive gases as well as clean air, giving a tight metal-to-metal seal without use of wiper seals.

The shaft is constructed of carbon or stainless steel, operating in an inert, self-lubricating graphite bearing.

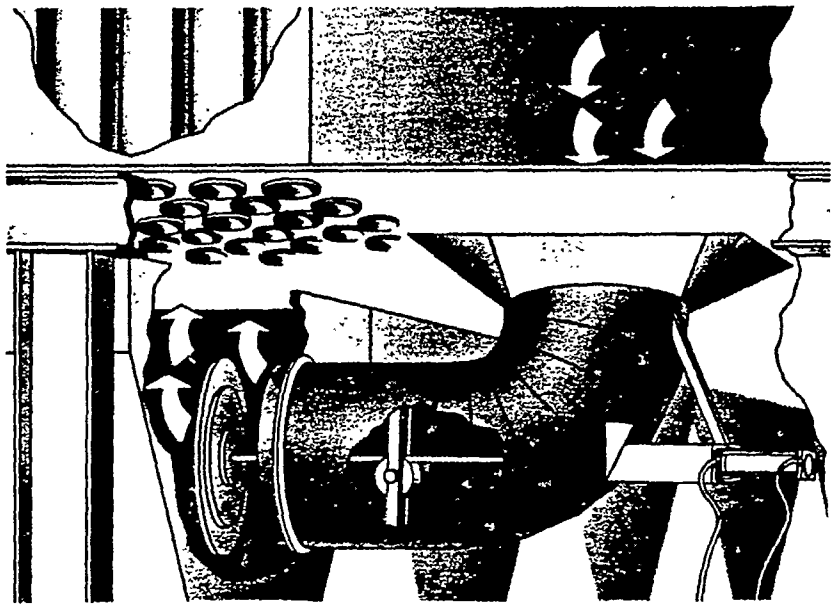

Dust Hopper Discharge Valves

Three types of dust-discharge valves are available as standard construction with pyramidal hoppers: 9″ slide valve, 9″ continuous dribble valve, and 9″ rotary valve.

While the 9″ size is standard, the valves can be supplied in sizes from 6″ to 30″ for special collection problems, as in the handling of light, fluffy materials.

Screw Conveyors

Screw conveyors for discharging collected dusts are available. Rotary valves and dribble valves are often used in conjunction with screw conveyors to provide an air lock while the collector is in operation.

Special Controls

Various special controls are available for the operation of Dustube collectors, as part of systems designed for specific operations.

Temperature Controllers—These thermocouple-type units operate by-pass or tempering air systems in the event of temperature surges on hot applications.

Volume Controls—Controlled by pressure-sensitive equipment, they maintain constant volume as the cloth back-pressure increases.

Program Timers—On Continuous Automatic units, a multiple-circuit program timer continuously cycles the various compartments. It can also operate the screw conveyor automatically on a programmed basis.

Polyflex Reset Timer—For Dustube collectors operating on intermittent service the Polyflex assures regular operation of the shaking device, keeping the filter tubes clean, preventing high back pressures, and assuring that the shaker will not be operated while the fan is running.

For other applications, the Air Pollution Control Division of Wheelabrator-Frye also offers:

- Ultra-Jet® Fabric Filter Dust Collectors—these are high-pressure pulse jet units which are available in both standard modules or custom-designed.
- Wheelabrator Lurgi Electrostatic Precipitators—designed without compromise, these units feature rigid-frame discharge electrode systems, and are designed for either hot side or cold side applications.

Regional Sales Offices:

ATLANTA
3456 Hardee Avenue,
Chamblee, GA 30341
(404) 458-3851

CHICAGO
4415 Harrison Street,
Hillside, IL 60162
(312) 449-8950

CLEVELAND
21010 Center Ridge Road,
Rocky River, OH 44116
(216) 331-1377

NEW YORK
2816 Morris Avenue,
Union, NJ 07083
(201) 686-7223

SAN FRANCISCO
1881 Rollins Road,
Burlingame, CA 94010
(415) 692-5336

CANADA
Wheelabrator-Frye Corp.
of Canada, Ltd.
235 Speers Road,
Oakville, Ontario
(416) 844-1550

Air Pollution Control Division
Wheelabrator-Frye Inc.

930 Ft. Duquesne Boulevard
Pittsburgh, PA 15222

(412) 288-7300

MEMBER
IGCI

APC-3 15•1•2

IV INSTALLATION & OPERATION

ERECTION INSTRUCTIONS
FOR PRE-ENGINEERED DUSTUBE DUST COLLECTORS

FOUNDATION

The foundation should be prepared according to the anchor bolt layout, which is usually found on the General Arrangement Drawing. Piers or slabs are to be designed by the customer to suit loadings of the collector as indicated on the above drawing and by soil conditions.

ERECTION

These models are prefabricated and shipped as either one-or three-piece modules with the support steel removed.

First, bolt the support columns to the anchor bolts. Then erect the rest of the support steel, tightening the bolts only enough to hold the columns in an upright position until the bracing and main frame members are erected. Level and square the framework, with shims under the base plates if necessary, then tighten all bolts and grout under the base plates.

If the collector is delivered in three modules, the upper housing, lower housing and hopper should be field connected on the ground by bolting and welding on the inside. Welds must be airtight and no gasketing or cement are used.

Lift the Dust Collector module by the lugs provided on the top corners of the main housing, set it on the support steel with bolt holes aligned, fasten bolts loosely, level the module, then fasten bolts tightly.

Assemble the walkway and handrail on the ground near the Dust Collector, then lift the walkway into position in front of the access door and bolt the walkway support channel to the side of the housing. Connect the preassembled safety cage ladder to the walkway as shown on the General Arrangement Drawing.

The shaker mechanism is held in place for shipping with a hold-down angle that runs the length of the collector. The hold-down angle is to be removed after the collector is in an upright position.

Install all DUSTUBES according to instructions.

Mount the motor on the motor base and install motor sheaves, V-belt and drive guard.

Mount screw conveyor (if any) to bottom of hopper by using cement and gasket.

Place inlet and outlet damper valves (if any) in correct position and connect ductwork.

By pulling on the V-Belt, manually operate the shaker mechanism through several turns to check for proper functioning of the unit.

INSPECTION AND MAINTENANCE INSTRUCTIONS FOR DUSTUBE DUST COLLECTOR

BEFORE OPERATION

1. Inspect all DUSTUBES from the hopper side for proper sealing against cell plates.

2. Make sure that there is gasketing and cement (except when welded) between flanges, and that all bolts are tight.

3. Roll the shaker device over by hand to be sure that no parts are binding and that all bolts are tight.

4. See that all tubing and pipe connections are tightly fastened and that all entrances to the housing are sealed airtight.

5. Become familiar with the construction of the timer and its function in collector operation. Follow through the cycle of damper valve operation and shaker motor operation to assure that they will operate properly.

6. Check the shaking cycle and make any necessary adjustment.

STARTING OPERATION

1. Inspect the housing for air leaks and remedy by either tightening the bolts nearby or caulking.

2. After the first day's operation, inspect the cell plate floor for dust accumulation If dust is found recheck the DUSTUBES and cell plate joints in the area.

3. Watch operation of shaker device for a final check on alignment and adjustment.

DURING OPERATION

Observe the manometer gauges. The manometers of properly operating compartment(s) should show a uniform difference in the level of liquid in each column. Often, one manometer will have both liquid columns equal (at zero) showing that the compartment to which it is connected is "out" for cleaning. A reading on this gauge indicates a leaky damper valve. The manometer reading of a compartment just before shakedown should be approximately 4 to 6 inches w.g. If manometer readings in excess of 6 inches w.g. are frequently noticed or if the manometer readings differ greatly, it may indicate the following:

1. The damper valve for this compartment has not been closing during the shaking cycle, preventing proper cleaning of the DUSTUBES.

2. Dust has bridged over the hopper outlet, or outlet is clogged with foreign matter, preventing discharge of collected dust.

3. Shaker device is inoperative.

DUST COLLECTOR

To insure maximum efficiency, the following portions of the collector require care:

1. Housing: The dust collector housing must be maintained in an air and water tight condition. At least once a year all flange bolts should be tightened and seams recaulked whereever leaks are detected. Protection against corrosion is required by periodic painting as needed. Mechanical damage to the housing or other protions of the system must be avoided.

2. Collector Supports: An annual inspection, tightening of all bolts and periodic repainting are required.

3. Doors: Access and inspection doors must be kept tightely closed, except when collector is shut down. Threaded members in clamps, etc., must be lubricated and protected from corrosion. Door seals and gaskets should be maintained in good conditions and replaced when they loose resiliency or become damaged. Door seals and gaskets are not to be painted at any time.

4. Automatic damper valves: (In continuous automatic operation) Automatically operated damper valves are provided on each compartment to interrupt the flow of air and permit the DUSTUBES to be shaken. Any passage of air through the DUSTUBES during shaking will seriously interfere with the efficiency of the shaking process, and will result in unduly high back pressure. These valves should be maintained according to manufacturers instructions; and closely monitor the manometer gauges as a check on their proper operation.

5. Damper valve operators: Consult instructions in Section VI.

6. Damper valve linkage: The linkage between the operators and valve shafts must be precisely adjusted at start-up and properly secured to prevent slippage. Corrosion should be prevented and binding eliminated.

7. Shaker Mechanism

   Lubrication: The eccentric bearings and pillow block bearings of the eccentirc shaft assembly are WHEELABRATOR neverlube bearings and require no further lubrication. However, grease should be applied to the grease fittings of the clevis and shaker bar pins on a monthly basis.

   Lost Motion: This requires a visual weekly inspection and a thorough monthly inspection. V-belt shaker drives should be checked for correct tension and wear, or replaced if necessary. Set screws in drive sheaves, bearing collars, etc., should be checked and tightened if needed. Pins and bushing in shaker bars, connecting rods, tie bars, and /or clevis halves should be checked for proper alignment and wear. Shaker bars exhibiting broken welds or other defects should be replaced. All nuts and bolts should be checked and tightened as required at monthly intervals. Wear on knife-edge assemblies or channel brackets and channel bearings should be checked monthly and parts replaced when knife-edge wear exceed 1/8 inch and V-block grooving exceeds 1/16 inch. Any tendency of the knife-edge protion of channel brackets to ride free of the channel bearings should be corrected by realignment of the shaker mechanism.

PRESSURE SENSING MANOMETERS

OPERATION

The effectiveness of almost all Wheelabrator-Frye Dust Collectors is monitored by manometers that compare the air pressure on the dirty air side of the filter fabric with the pressure on the clean air side.

When a unit is started up with clean DUSTUBES, the air pressure created by the main exhaust fan on the dirty air side is more than the pressure on the clean air side. This difference is shown by the levels of colored liquid in the two branches of the U-tube manometer. The end of one of the branches is open to the dirty air atmosphere and the other branch is open to the clean air side. The differences in level are read in inches of water, since the specific gravity of the manometer fluid is the same as water (1.00). The manometer, therefore, is a visual check on the operation of the unit and will immediately detect any malfunction such as a stuck valve or damaged DUSTUBE.

INSTALLATION

To connect tubing between manometer and housing, see instruction drawing listed on contents sheet under Section VI. It may be necessary to purchase extra tubing so that the manometers can be placed in a more convenient location. The location we suggest is referred to on the instruction drawing.

CLEANING

To clean out the manometer, you remove the top wingnut, drop the head, remove the two thumbscrews that hold the reading scale, and remove the scale. Then take a small screwdriver and remove the small screw and clip at the bototm, which allows the glass portion of the manometer tc come out. Being careful not to break the glass U-tube, dump out the old manometer fluid and scrub the inside with a small-bore cleaning brush and water. All foreign material and stains must be removed and the cleaned tube must be dry before refilling. Then put the glass U-tube and scale back in place and tighten the finger screws almost all the way. The manometer should now be filled with a funnel approximately up to the zero marks, final fine adjustment made to zero by moving the scale up or down, the scale screws tightened all the way, and the head and wing nut replaced.

The tubing can also be disconnected at the head of the manometer and compressed air can be used to blow out the tubing. Small valves are sometimes installed to permit connection of a compressor directly to the line.

When there is a bad break, the manometer fluid and dirt can be blown all through the tubing. When this happens, you should remove the manometer and blow out the line to make sure you get all of the dirt and fluid. Then the bags should be changed and the manometer hooked up before resuming operation.

Manometers also detect malfunctioning because of improperly operated valves, and leaks in tubing connections. The integrity of the entire unit should be checked thoroughly when a leak is suspected.

INSTRUCTIONS FOR CLEANING OR REBAGGING
WHEELABRATOR-FRYE FABRIC FILTER AIR POLLUTION CONTROL UNIT

Shut down the unit and make sure it cannot be turned on during the cleaning or rebagging process.

Let the temperature inside the unit cool down to 100°F.

Put on long tight-fitting thermal underwear next to the skin with constrictions at the wrists and ankles. Put on a turtleneck dickie or tie a scarf around the neck. Then put on coveralls and work shoes.

Smear all exposed skin surfaces with a water-soluble face cream.

Wear a good respirator designed specifically to handle the type of dust and fumes you will be exposed to. A safety supply house should be able to provide you with one suitable for your purpose.

If you follow these instructions, you should be protected adequately; but if you have any questions don't hesitate to write or call:

Mr. James F. Boyer
Manager, Applications Engineering
Fabric Filter Products
Air Pollution Control Division
Wheelabrator-Frye Inc.
600 Grant Street
Pittsburgh, Pennsylvania 15219

Telephone: (412) 288-7472

INSTRUCTIONS
FOR
APPLYING GASKETING AND CEMENT

The proper method of applying cement and gasketing is to apply the cement liberally onto the mating flange surfaces with a putty knife; cut the strips of gasketing to fit the flanges with a minimum of breaks; stick the gasketing to the lower flange surface, being careful to butt the breaks closely together; lower the upper flange until it rests on the gasketing; line-up the bolt holes; insert bolts, apply washers and nuts; and tighten up on the nuts gradually and evenly until they are perfectly tight and create an airtight seal. The cement should be applied liberally enough so that it will squeeze out when the bolts are drawn tight. Excess cement must be scraped off immediately after tightening. Do not apply cement when below 32°F.

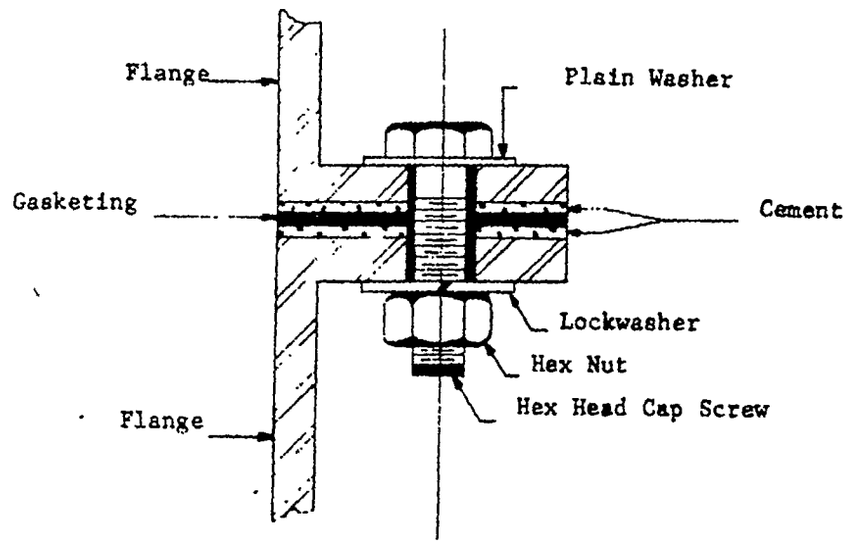

SD-7501

V PARTS LISTS

INSTRUCTIONS FOR INSTALLING STRAP TOP BAGS ON THREE PRONG TUBE HOOKS

INSTALLATION INSTRUCTIONS

1. Bag installation is essentially a two-man job: one man at the cell plate level and the second man at the tube-hook level. In most cases, ladders, stools or (preferably) scaffolding must be used to reach the tube-hooks for the installation of strap-top bags. Two steep ladders and a plank make a satisfactory portable scaffold for most jobs.

2. (Top man) Remove all brackets or clamps which were installed to hold the shaker mechanisms in place during shipping. Frequently, a bar bolted across the knife edge assemblies must be removed.

3. (Top man) Be sure that the shaker tube assemblies are in the horizontal position so that the tube hook shafts are in the vertical position. Should the shaker tubes be sitting at an angle, rotate the sheave on the eccentric shaft with your hand until the shaker tube assembly and the tube hooks are leveled.

4. (Top man) Make sure that all tube hooks are properly installed. It is most convenient that they all be facing in the same direction.

5. (Bottom man) Collapse the snap-ring into a V-shape and push it through the cell plate hole. With one hand, see that the bottom of the snap-ring is flush with the bottom of the cell plate flange. Release the snap-ring slowly and allow it to snap into place.

DUSTUBE TOP

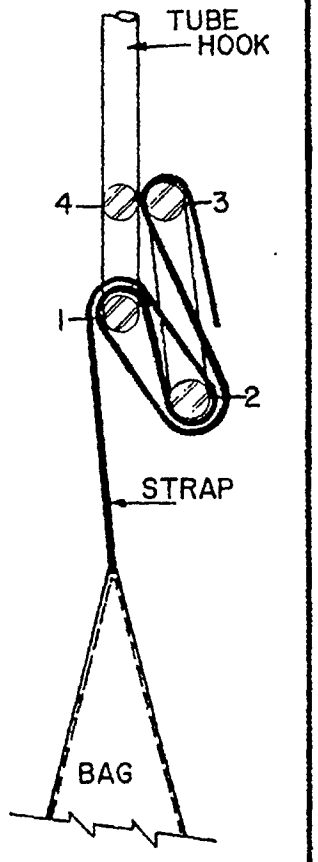

DUSTUBE BOTTOM

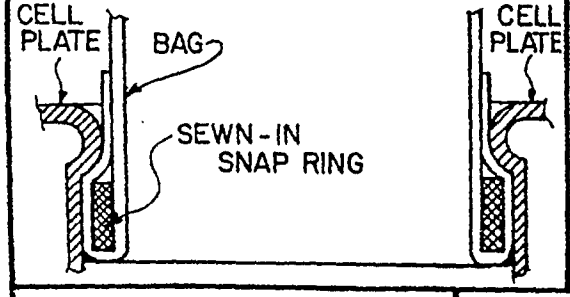

WHEELABRATOR-FRYE INC.	SCALE:NONE	SD 7301 REV. 1 7/22/75

6. (Bottom man) Hand the DUSTUBE up to the top man.

7. (Top man) Face the tube hook with the bend to the right, grasp the untwisted strap with both hands and pass it straight up to the left of Prong #1, then down the right so that it extends over both Prongs #1 and #2 with the end hanging down.

8. With your right hand, bring the end of the strap up and to the left, over Prong #1 between the strap and the Prong and then down.

9. Now straighten the bag seam at the snap-ring and pull up the strap at the tube hook so that the bag is fairly free of folds and wrinkles. Be sure that all the DUSTUBE seams are facing in the same direction, so that excessive bag wear during operation will be avoided.

10. (Both) Check to determine the proper DUSTUBE suspension. With Dacron, Nylon and Nomex 5" diameter DUSTUBES, the recommended slack should be 1-1/4" on 126" long bags and 1-3/4" on 171" long bags at initial installation because of shrinkage. With Acrylic 5" diameter DUSTUBES, Zero Slack should be used because of bag stretch. With 5" diameter fiberglass bags on repressuring systems only a tension setting of 10 lbs. is required.

Zero Slack is a subjective specification. It is a condition reached when a bag (with cuff is already installed in the cell plate) is lifted by the top without undue force or stretch until upright and the portion of the bag within 6" of the cell plate is fairly free from folds or wrinkles.

An objective specification is the use of a Spring Scale to "lift" a few bags to prescribed tension in order to judge the desired condition. The recommended tensions are for clean DUSTUBES.

When installing new tubes in an entire compartment, run a detailed check on the first few tubes which are installed, the remainder of the tubes can be checked by observing their hanging positions relative to these first few checked tubes.

If a tube is accidentally too taut, the procedure for allowing some slack is as follows: Using one hand, lift the top thickness of strap which is over the upper horizontal prong (Prong #1) and with the other hand pull the strap backward through the hook. Remember, DUSTUBES should not be overstretched.

11. (Top man) After each DUSTUBE is properly installed and its slack or tension adjusted, bring the strap down to the right and up around Prong #2, pull the strap hand-tight and insert the strap between Prongs #3 and #4.

12. If the strap extends down to the top of the DUSTUBE, cut if off neatly.

MAINTENANCE

1. Do not apply any paint or other coating material to the sides of the cell plate holes. Remove any accumulated material from the cell plate holes before new DUSTUBES are installed.

2. Be sure that the bags are not hanging with a great deal of slack. Inadequate tension will cause the bottom cuff to roll down, thus causing the dust to accumulate at the bottom and restricting air flow through the bag. Bags hanging with too much slack will not shake out properly and may completely fill with dust.

3. Check to see that all snap-rings are fully expanded in the cell plate holes; that the bottom cuff is not seated on an angle or protruding above or below the cell plate. Under these conditions, the DUSTUBE is apt to pop out of the cell plate and/or leak dust.

GENERAL INFORMATION ON DUSTUBES

1. During the collector inspection, an accumulation of dust present on the cell plate floor indicates that there is a hole or tear in one of the DUSTUBES. If a new DUSTUBE can not be installed immediately, remove the damaged DUSTUBE from the tube hook, roll this tube down and stuff it into its cell plate hole. This tube should be replaced as soon as possible.

2. A noticeable increase of dust in the collector's clean air outlet is a second indication of a hole in one of the DUSTUBES.

fabric bag ...
are not functioning correctly. If the dampers do not completely seal off a compartment during shaking, the DUSTUBES will not deflate and there will be excessive bag tension during the shaking cycle resulting in early bag wear. Faulty damper valves should be repaired or replaced immediately.

REMOVAL

1. Be careful to avoid damaging the DUSTUBES the snap-rings during removal or installation.

2. First, remove the DUSTUBE strap from the tube hook by unlacing the strap through the prongs.

3. Grasp the DUSTUBE at the bottom with both hands and push in with your thumbs collapsing the snap-ring into a V-shape, then gently tug the bag until it pulls clear of the cell plate hole.

4. To install new bags, follow the steps found in INSTALLATION INSTRUCTIONS.

V. REPAIR PARTS INFORMATION SHEET

The next page contains a list of repair parts that we recommend you keep on hand to guarantee uninterrupted operation of your Wheelabrator-Frye pollution control equipment. If possible, the repair parts should be included with your initial order, both for a better price, and to make sure you have them on hand when you begin operation.

Another reason for ordering spare parts with your initial order is the fact that the parts can then be capitalized and written off as depreciation, rather than being counted as a budget expense.

The recommended number of spare DUSTUBES and other spare parts is based on the type and size of your unit, the mode of operation, and the actual experience of our customers. We strongly recommend the use of original equipment Wheelabrator-Frye spare parts and our Criswell Division's DUSTUBES and other components because of our patent position and the fact that exact dimensions are critical to the close fitting and efficiency of your WFI Dust Collector.

While we will gladly forward any DUSTUBE orders to our Criswell Division, it would help you and us to provide the best possible service if you would please address orders and inquiries for DUSTUBES to this address:

Criswell Division, Wheelabrator-Frye Inc.
800 Industrial Highway, P.O. Drawer 32
Riverton, New Jersey 08077

Wheelabrator-Frye will continue to handle and supply all replacement parts other than DUSTUBES from our Mishawaka, Indiana address. Orders and inquiries for replacement parts should be sent to this address:

Wheelabrator-Frye Inc., Parts Service Dept.
600 Grant Street
Pittsburgh, Pa. 15219

It will help us provide prompt and accurate service if you will give us the part number, the serial or contract number of the machine for which the part is needed, and the number of the drawing on which the part is shown.

Spare parts for items manufactued by suppliers other than Wheelabrator-Frye should be ordered direcly from those suppliers.

PART V PARTS LIST

GENERAL INFORMATION

In this section of the manual is a list of recommended spare parts with instructions for ordering these parts through Wheelabrator-Frye, Inc. This spare parts list includes items of W.F.I. manufacture, plus vendor supplied items which we feel you, the customer, should keep on hand to guarantee uninterrupted operation.

Also in this section, if applicable, we have included parts lists for items of equipment designed or fabricated by W.F.I. and/or Vendors. These lists should be used in conjunction with reference drawing(s) listed on each parts list and located in Part VI of this manual.

Specific details and other information relating to equipment or parts can be best understood by referring to the drawings and instructions included in Part IV of this manual.

RECOMMENDED SPARE PARTS LIST

SHAKER

Quantity	Part No.	Description
50	640246	DUSTUBES
50	209818	Tube Hooks
6	194206	V-Block
6	186183	Knife Edge Assembly
6	233061	Gasket (for Spacer Box Assembly)
6	186235	Spacer
2	233064	Spacer Box Assembly
6	186236	Felt Seal
6	233347	1-1/4" Dia. Dodge SL-4 Bolt Flg. Brg.
6	293555	Shaker Arm Assembly
6	293529	Pin
12	700563	Snap Ring
2	293547	Shaker Bar Assembly
3	293535	Nylon Bushing (Shaker Bar)
1	186269	Eccentric Shaft
2	226244	1-3/4" Dia. Eccentric Bearing
4	229855	Clevis Half Assembly
2	198346	1-3/16" Dia. Pillow Block
50	500059	5/16" - 18 NSC Hex Nuts
50	500080	5/16" - 18 NSC Self-Locking Hex Nuts
1	294319	End Shaft
1	294320	End Shaft
1	195686	Dyna-V-Belt

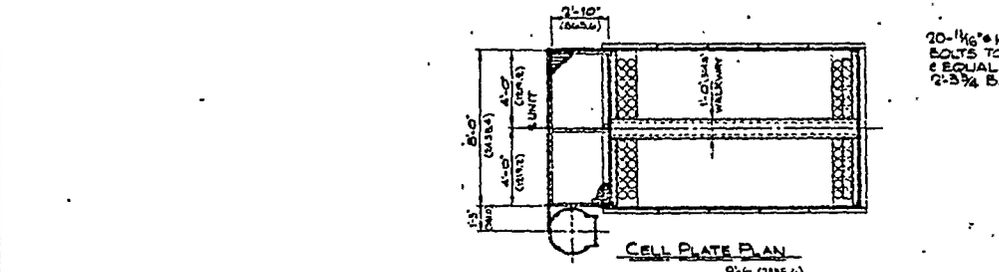

CELL PLATE PLAN

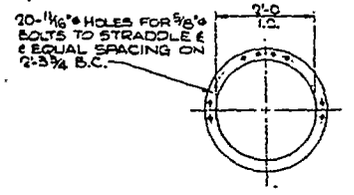

INLET & OUTLET FLANGE

	A1	A2	B1	B2
DEAD LOAD	2.5	2.5	2.5	2.5
LIVE LOAD	1.0	1.0	1.0	1.0
DUST LOAD	1.9	1.9	1.9	1.9
VERT. WIND X	±2.4	±2.4	±2.4	±2.4
VERT. SEIS. X	±2.1	±2.1	±2.1	±2.1
VERT. WIND Y	±2.3	±2.3	±2.3	±2.3
VERT. SEIS. Y	±4.4	±4.4	±4.4	±4.4
HORIZ. WIND X	±3.4	0	±3.4	0
	0	±3.4	0	±3.4
HORIZ. SEIS. X	±2.6	0	±2.6	0
	0	±2.6	0	±2.6
HORIZ. WIND Y	0	0	±2.9	±2.9
	±2.9	±2.9	0	0
HORIZ. SEIS. Y	0	0	±2.6	±2.6
	±2.6	±2.6	0	0

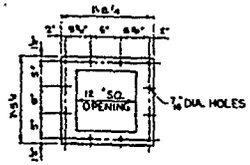

DISCHARGE FLANGE
SECTION "A-A"

COL. LOADS DESIGNED FOR
WIND ZONE - 35 PSF
SEISMIC ZONE - 3
DUST DENSITY - 75 PCF (HOPPER 40% FULL)
SNOW LOAD - 30 PSF

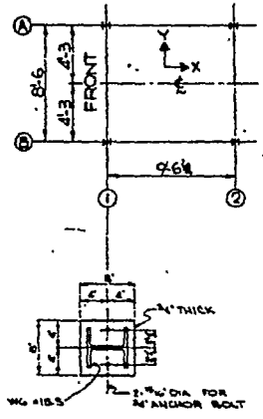

BASE R. DETAIL

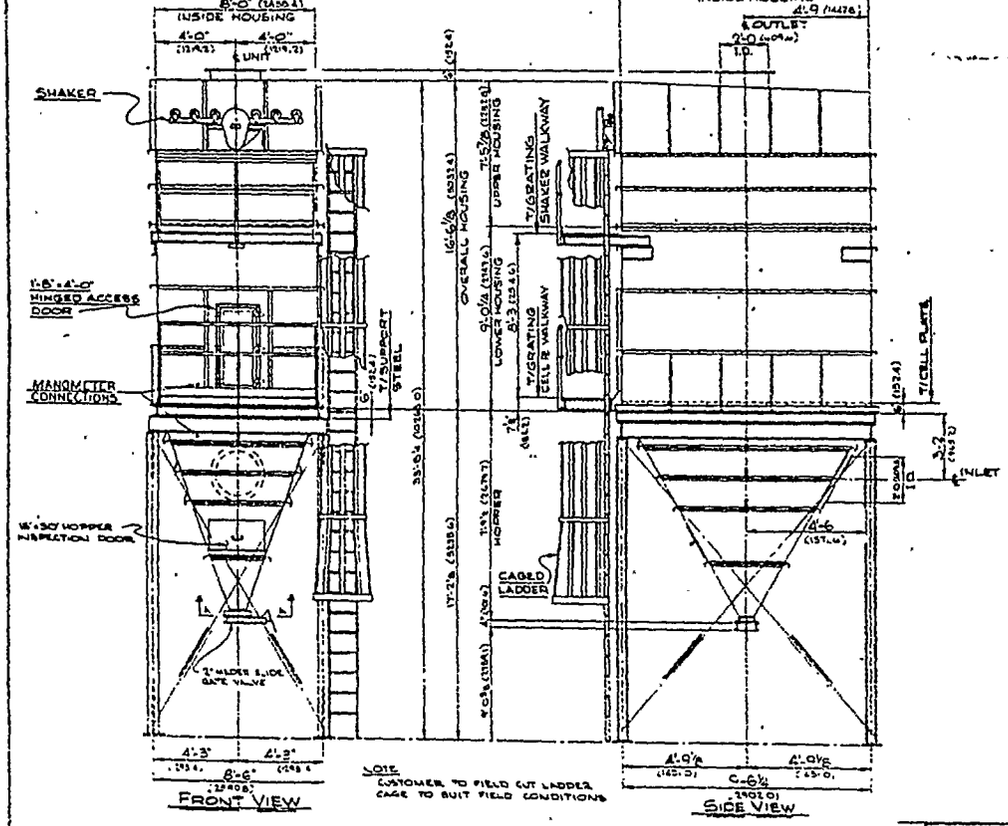

FRONT VIEW

NOTE:
CUSTOMER TO FIELD CUT LADDER CAGE TO SUIT FIELD CONDITIONS

SIDE VIEW

CONFIDENTIAL INFORMATION
This print and all information thereon is the property of Wheelabrator-Frye Inc. It is confidential and proprietary and must not be used, reproduced, or loaned unless authorized in writing by Wheelabrator-Frye Inc. It is transmitted to you with the express understanding that it is subject to return upon request.

ASARCO INCORPORATED
EL PASO, TEXAS

AIR POLLUTION CONTROL SYSTEMS
WHEELABRATOR-FRYE INC.
PITTSBURGH PA

GENERAL ASSEMBLY
SINGLE 5' SHAKER MODULE
1217-E-171

1217-4656-1 REV 3/8"=1'-0"
2412-1-900

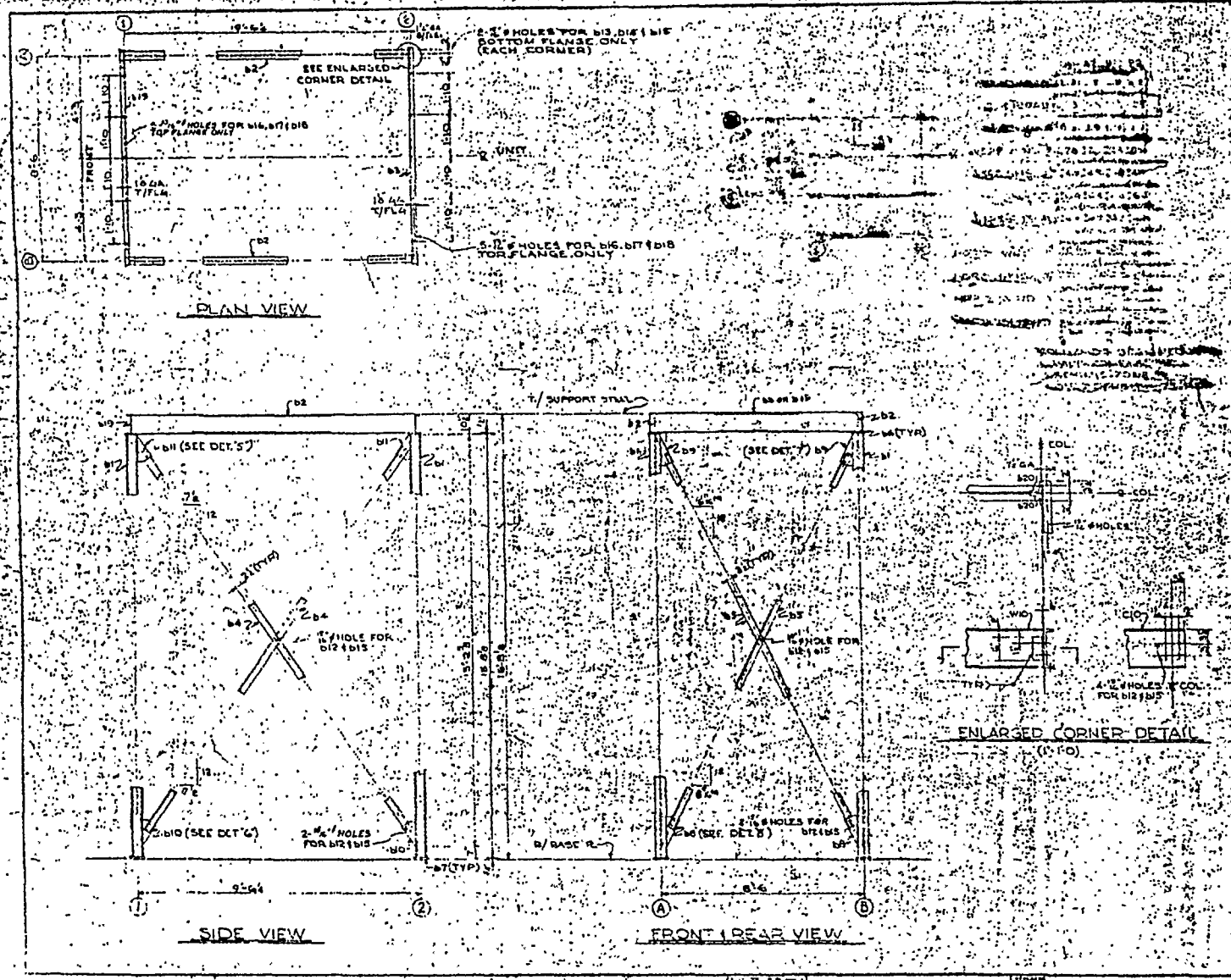

BILL OF MATERIAL FOR ONE UNIT

MK	ITEM	NO. REQ'D	DESCRIPTION	MT/UNIT	REMARKS
B			SUPPORT STEEL		
	b1	4	W6-15.5-15-8½	[illegible]	
	b2	2	W10-11.5-9-6	213	
	b3	1	C10-15.3-9-0½	123	
	b4	4	L3½-2½-¼-16-0¼	403	
	b5	4	L3½-2½-¼-15-10¼	346	
	b6	4	R ¾-7-0-7	28	
	b7	4	R ¾-8-0-8	[illegible]	
	b8	2	R ⅜-10-11-5¼	[illegible]	[illegible]
	b9	2	R ⅜-9-11-2½	[illegible]	[illegible]
	b10	2	R ⅜-6-10-10¼	[illegible]	[illegible]
	b11	2	R ⅜-6-10-10¼	[illegible]	[illegible]
	b12	52	¾ ø 2¼ LG HEX HD HY DTY BLT.	-	
	b13	8	¾ ø 2¼ LG HEX HD HY DTY BLT.	-	
	b14	8	¾ STD BEVELED WASHERS	-	
	b15	60	¾ HEX NUTS	-	
	b16	10	¾ ø 2¼ LG HEX HD HY DTY BLT.	-	
	b17	20	¾ STD. BEVELED WASHERS	-	
	b18	10	¾ HEX NUTS	-	
	b19	1	C10-15.3-9-0½	156	
	b20	8	L3-3-¼-0-6	20	

NOTES:
1. FOR GENERAL ARRANGEMENT SEE DWG. 15-6000
2. WORK THIS DWG. WITH DWG. 1217-615

CONFIDENTIAL INFORMATION

AIR POLLUTION CONTROL SYSTEMS
WHEELABRATOR-FRYE INC.

SUPPORT STRUCTURE
SINGLE 1217
(8-0 [illegible])
1217

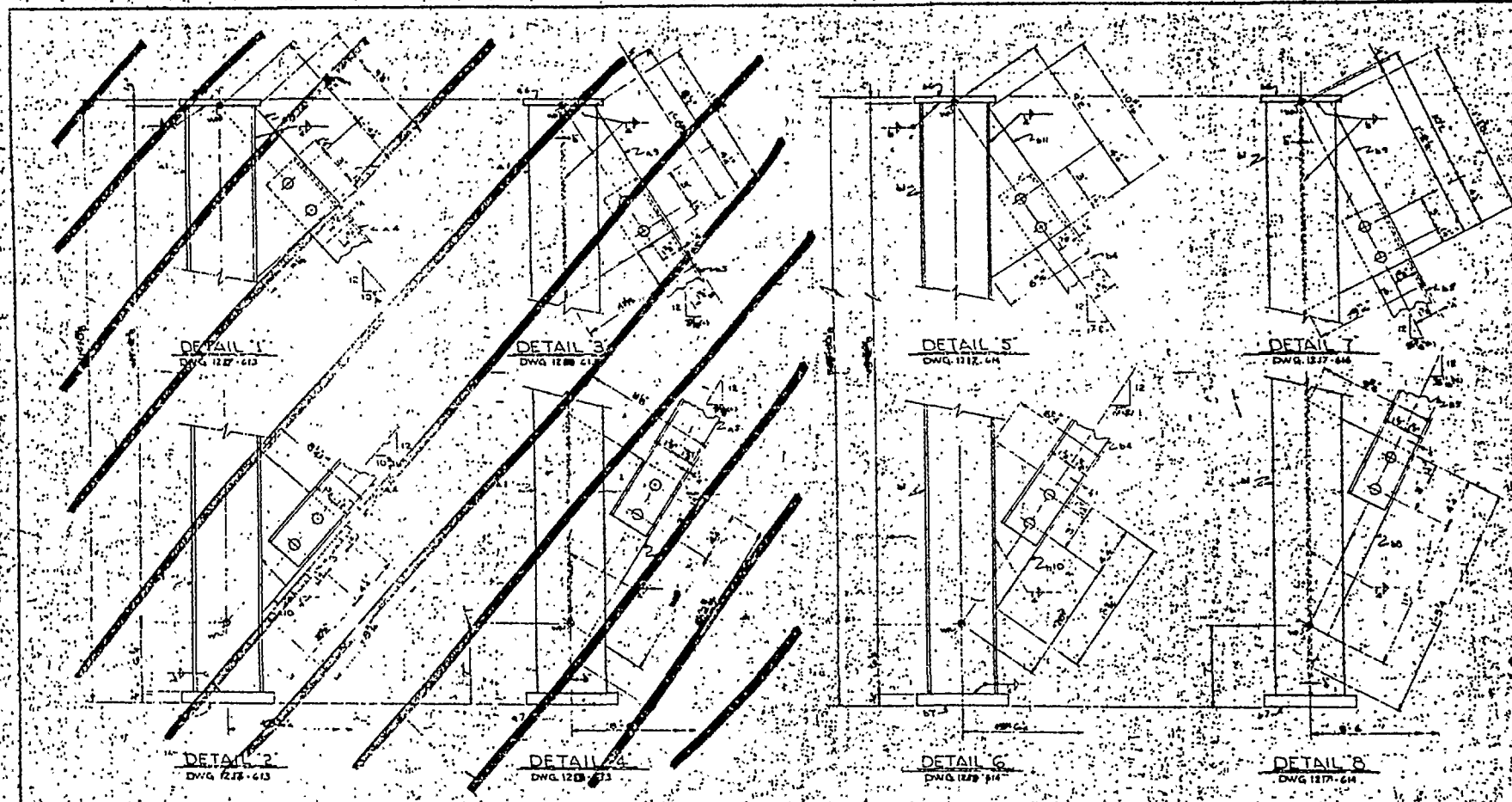

NOTE:
ALL HOLES TO BE 15/16" ϕ UNLESS NOTED

CONFIDENTIAL INFORMATION

This print and all information thereon is the property of Wheelabrator-Frye Inc. It is confidential and proprietary and must not be used, made public, or copied unless authorized in writing by Wheelabrator-Frye Inc. It is transmitted to you with the express understanding that it is subject to return upon request.

ABARCO INCORPORATED
EL PASO, TEXAS

AIR POLLUTION CONTROL SYSTEMS
WHEELABRATOR-FRYE INC.

SUPPORT STRUCTURE
FOR SINGLE 1217-
(4'-0 & 8'-0) CLEARA
1217 - 615

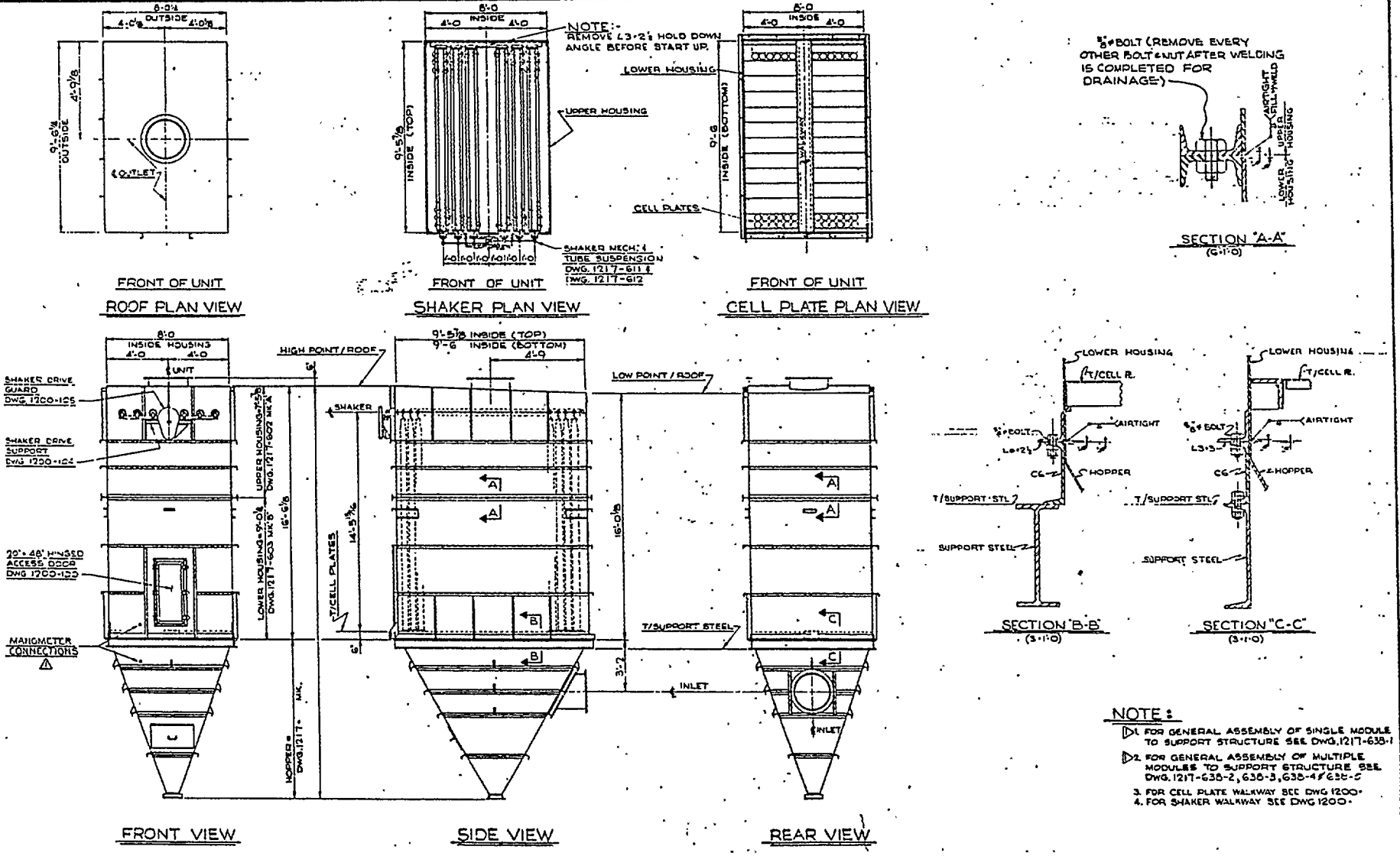

NOTE:

1. FOR GENERAL ASSEMBLY OF SINGLE MODULE TO SUPPORT STRUCTURE SEE DWG. 1217-638-1
2. FOR GENERAL ASSEMBLY OF MULTIPLE MODULES TO SUPPORT STRUCTURE SEE DWG. 1217-638-2, 638-3, 638-4 & 638-5
3. FOR CELL PLATE WALKWAY SEE DWG 1200-
4. FOR SHAKER WALKWAY SEE DWG 1200-

CONFIDENTIAL INFORMATION
The data and all information thereon is the property of Wheelabrator-Frye Inc. It is confidential and proprietary and must not be used, made public, or reused unless authorized in writing by Wheelabrator-Frye Inc. It is transmitted to you with the explicit understanding that it is subject to return upon request.

DRAWN JL HOFFMAN 3/21/75

AIR POLLUTION CONTROL SYSTEMS
WHEELABRATOR-FRYE INC.
PITTSBURGH, PA.

ERECTION ARRANGEMENT
5' SHAKER MODULE
1217-F-171

1217-642 3/8"=1'-0"

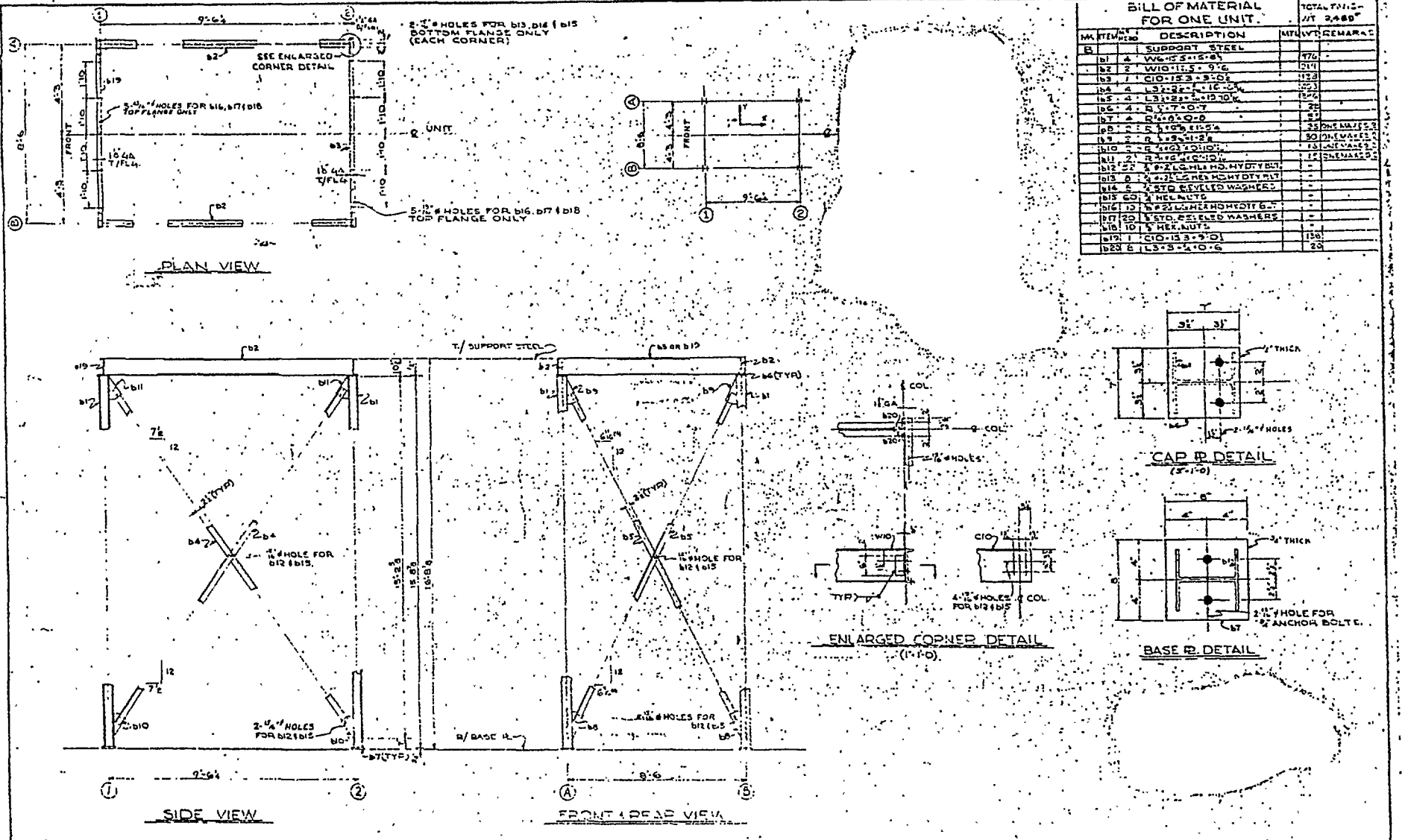

BILL OF MATERIAL FOR ONE UNIT.

TOTAL WEIGHT PER UNIT 2,480#

MK	ITEM	NO. REQ'D	DESCRIPTION	MTL	WT	REMARKS
B		1	SUPPORT STEEL			
	b1	4	W6×15.5×15-8½		976	
	b2	2	W10×11.5×9'-6		214	
	b3	1	C10×15.3×9'-0½		153	
	b4	4	L3½×3½×⅜×16'-0"		160	
	b5	4	L3½×3½×⅜×15'-10½		154	
	b6	4	PL ½×7"×0'-7		25	
	b7	4	PL ½×9"×0'-0		23	
	b8	2	PL ½×10"×8'-11½		25	ONE MARK B
	b9	2	PL ½×8"×8'-11½		50	ONE MARK B
	b10	2	PL ½×10"×10½"		18	ONE MARK B
	b11	2	PL ½×6"×0'-10½"		12	ONE MARK B
	b12	52	¾"ø L.H.S.H.S. HVY DTY BLT.		-	
	b13	8	¾"ø L.H.S.H.S. HVY DTY NUT		-	
	b14	6	¾" STD. BEVELED WASHERS		-	
	b15	60	¾" HEX. NUTS		-	
	b16	10	¾"ø F.H.C. WASHER HVY DTY BLT.		-	
	b17	20	¾" STD. BEVELED WASHERS		-	
	b18	10	¾" HEX. NUTS		-	
	b19	1	C10×15.3×9'-0½		138	
	b20	8	L3½×3½×⅜×0'-6		20	

ERECTION SUPPORT STRUCTURE FOR SINGLE 1217-F UNIT 75'-0" S.P.

1217-6-4

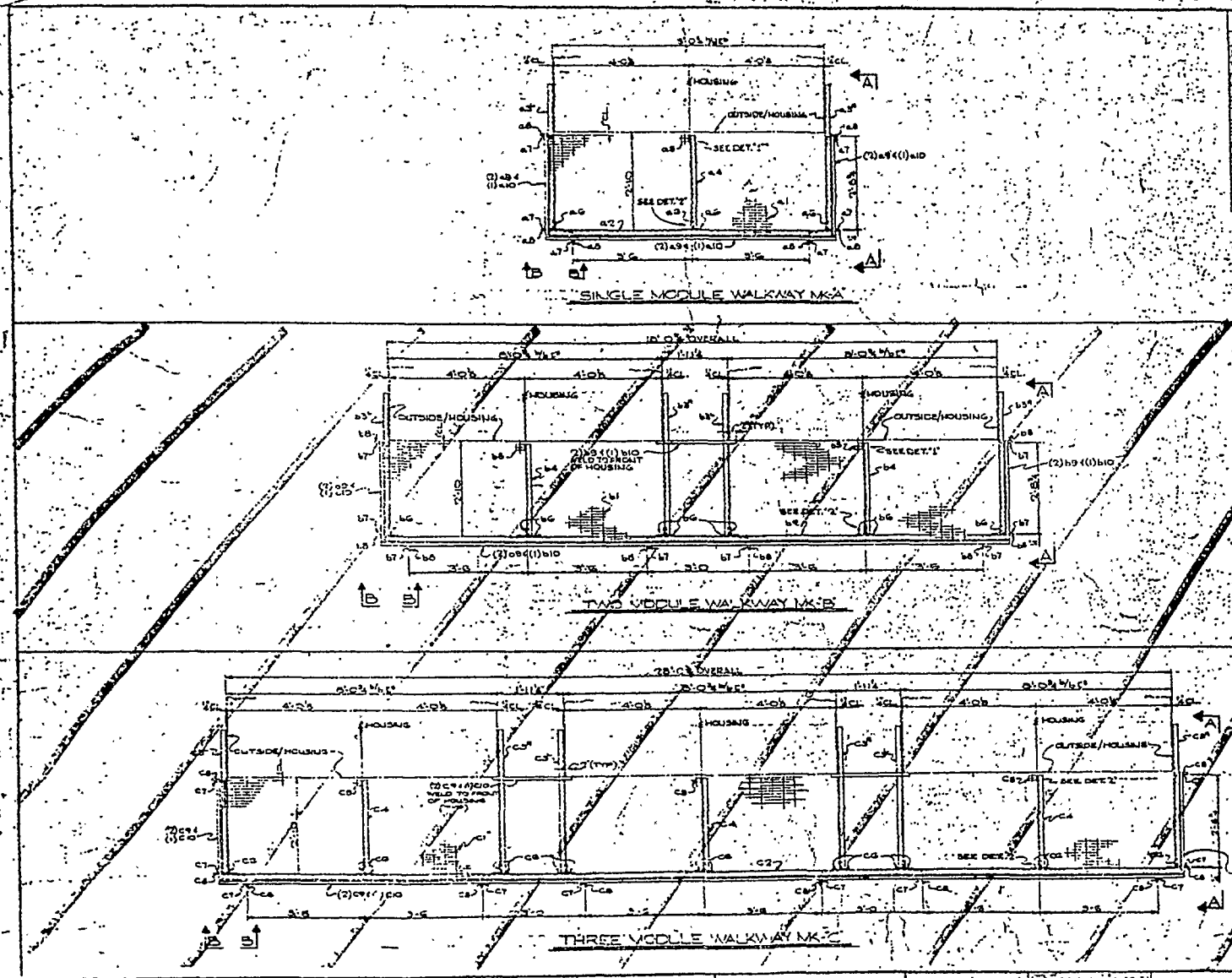

BILL OF MATERIAL

TOTAL FINISH WT. 620

MK.	ITEM	REQ'D	DESCRIPTION	MATL.	WT.	REMARKS
"A"			SINGLE MODULE WALKWAY			
	a1	23	GRATING 1" × 3/16 (2-11W × 18-4½ LG)		154	
	a2	1	CG × 8.2 × 3-4½		59	
	a3	1	CG × 8.2 × 4-2½		59	
	a4	1	CG × 8.2 × 2-3¾		22	
	a5	1	L3 × 3 × ¼ × 0-2		1	
	a6	4	L3 × 3 × ¼ × 0-4½		3	
	a7	6	L4 × 3 × ¼ × 0-4		11	
	a8	6	½ BAR × 2½ × 3-11		66	
	a9	2	1" ROD 20'-0 LG		107	CUT IN FIELD
	a10	1	¾ BAR × 4" × 20'-0 LG		21	CUT IN FIELD
	a11	28	¾ × 1½ LG HEX. HD HY DUTY BOLTS		—	
	a12	28	¾ HEX. NUTS		—	

BILL OF MATERIAL

TOTAL FINISH WT. 1157

MK.	ITEM	REQ'D	DESCRIPTION	MATL.	WT.	REMARKS
"B"			TWO MODULE WALKWAY			
	b1	34	GRATING 1" × 3/16 (2-11W × 18-4½ LG)		297	
	b2	1	CG × 8.2 × 18-4½		161	
	b3	2½	CG × 8.2 × 4-2½		198	
	b4	2	CG × 8.2 × 2-3¾		45	
	b5	2	L3 × 3 × ¼ × 0-2		2	
	b6	10	L3 × 3 × ¼ × 0-4½		6	
	b7	8	L4 × 3 × ¼ × 0-4		15	
	b8	8	½ BAR × 2½ × 3-11		133	
	b9	3	1" ROD × 20'-0 LG		150	CUT IN FIELD
	b10	2	¾ BAR × 4" × 20'-0 LG		102	CUT IN FIELD
	b11	32	¾ × 1½ LG HEX HD HY DUTY BOLTS		—	
	b12	32	¾ HEX. NUTS		—	

BILL OF MATERIAL

TOTAL FINISH WT. 1647

MK.	ITEM	REQ'D	DESCRIPTION	MATL.	WT.	REMARKS
"C"			THREE MODULE WALKWAY			
	C1	33	GRATING 1" × 3/16 (2-11W × 28-4½ LG)		310	
	C2	1	CG × 8.2 × 28-4½		233	
	C3	3½	CG × 8.2 × 4-2½		237	
	C4	3	CG × 8.2 × 2-3¾		67	
	C5	3	L3 × 3 × ¼ × 0-2		2	
	C6	15	L3 × 3 × ¼ × 0-4½		20	
	C7	10	L4 × 3 × ¼ × 0-4		19	
	C8	10	½ BAR × 2½ × 3-11		167	
	C9	4	1" ROD × 20'-0 LG		1214	CUT IN FIELD
	C10	2	¾ BAR × 4" × 20'-0 LG		102	CUT IN FIELD
	C11	70	¾ × 1½ LG HEX HD HY DUTY BOLTS		—	
	C12	76	¾ HEX. NUTS		—	

NOTE:
1. FOR SHAKER WALKWAYS FOR THE FOUR & TWO UNITS SEE DWG. 1200-106
2. WORK THIS DWG. WITH DWG. 1200-109

CONFIDENTIAL INFORMATION

AIR POLLUTION CONTROL SYSTEMS
Wheelabrator-Frye, Inc.

SHAKER WALKWAY
FOR SINGLE, TWO, & THREE
1217-F, 1220-F, & 1224-F UNITS

1200-107

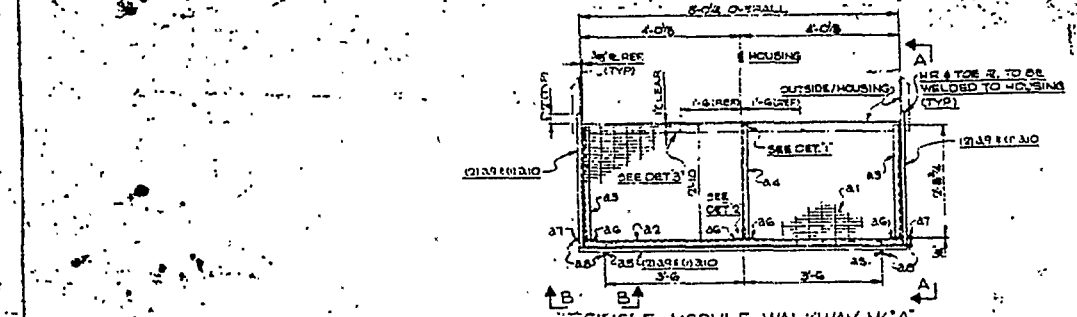

BILL OF MATERIAL

TOTAL FINISH WT. 547#

MK	ITEM	REQD	DESCRIPTION	MTL WT	REMARKS
"A"			SINGLE MODULE WALKWAY		
	A1	GRAV	GRATING 1"x3/16"THK"x5"THK(I.G.)	176	
	A2	1	C6x8.2x3'-11½	45	
	A3	2	C6x8.2x2'-6¾	45	
	A4	1	C6x8.2x2'-6¾	22	
	A5	2	L4x3½x¼x0'-4	4	
	A6	4	L3x3x¼x0'-4	3	
	A7	2	L3x3x¼x0'-4½	3	
	A8	4	BAR ⅜"x1½"x3'-11	6	
	A9	2	RODS 1"ø x 20'-0	107	CUT IN FIELD
	A10	1	BAR 4"x⅜"x 20'-0	51	CUT IN FIELD
	A11	24	¾"ø HVYLG HDI HD HY DUTY SQU	—	
	A12	24	¾" HEX NUT	—	

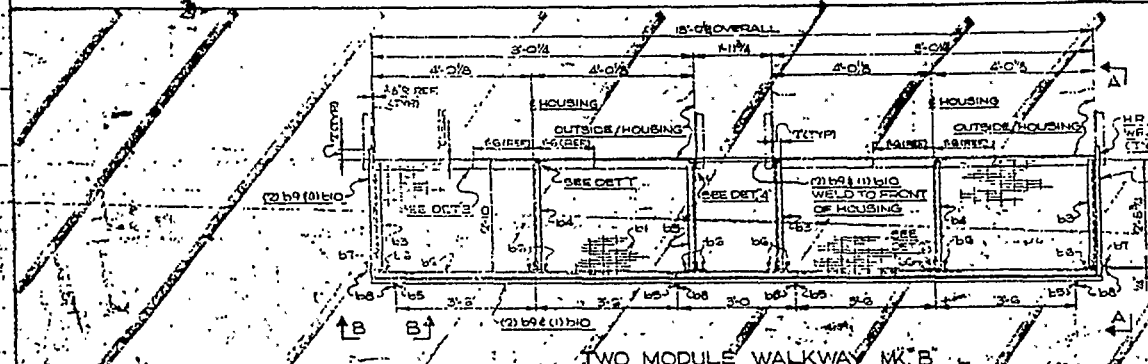

BILL OF MATERIAL

TOTAL FINISH WT. 1,032#

MK	ITEM	REQD	DESCRIPTION	MTL WT	REMARKS
"B"			TWO MODULE WALKWAY		
	B1	GRAV	GRATING 1"x3/16"THK"x5"THK(I.G.)	390	
	B2	1	C6x8.2x11'-11½	141	
	B3	4	C6x8.2x2'-6¾	90	
	B4	2	C6x8.2x2'-6¾	45	
	B5	4	L4x3½x¼x0'-4	8	
	B6	10	L3x3x¼x0'-4	15	
	B7	2	L3x3x¼x0'-4½	3	
	B8	6	BAR 2½"x½"x3'-11	100	
	B9	3	RODS 1"ø x 20'-0	160	CUT IN FIELD
	B10	2	BAR 4"x⅜"x 20'-0	102	CUT IN FIELD
	B11	52	¾"ø HVYLG HEX HD HY DUTY BOLT	—	
	B12	52	¾" HEX NUT	—	

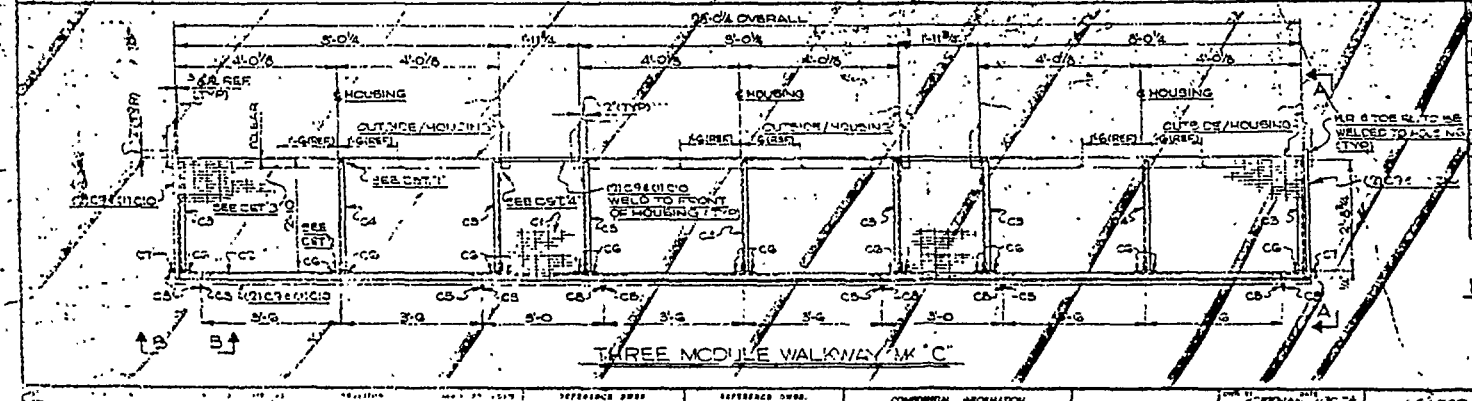

BILL OF MATERIAL

TOTAL FINISH WT. 1523#

MK	ITEM	REQD	DESCRIPTION	MTL WT	REMARKS
"C"			THREE MODULE WALKWAY		
	C1	GRAV	GRATING 1"x3/16"THK"x5"THK(I.G.)	603	
	C2	1	C6x8.2x11'-11½	139	
	C3	2	C6x8.2x2'-6¾	134	
	C4	3	C6x8.2x2'-6¾	68	
	C5	6	L4x3½x¼x0'-4	11	
	C6	15	L3x3x¼x0'-4	23	
	C7	2	L3x3x¼x0'-4½	4	
	C8	6	BAR ⅜"x1½"x3'-11	33	
	C9	4	RODS 1"ø x 20'-0	214	CUT IN FIELD
	C10	2	BAR 4"x⅜"x 20'-0	102	CUT IN FIELD
	C11	76	¾"ø HVYLG HEX HD HY DUTY BOLT	—	
	C12	76	¾" HEX NUT	—	

NOTES:

1) FOR CELL B, WALKWAY FOR THE FOUR & FIVE UNITS SEE DWG. 1200-111.

2) WORK THIS DWG. WITH DWG. 1200-112

CONFIDENTIAL INFORMATION

ASARCO

Wheelabrator-Frye Inc.

CELL PLATE WALKWAYS FOR SINGLE, TWO & THREE

1200-1 C

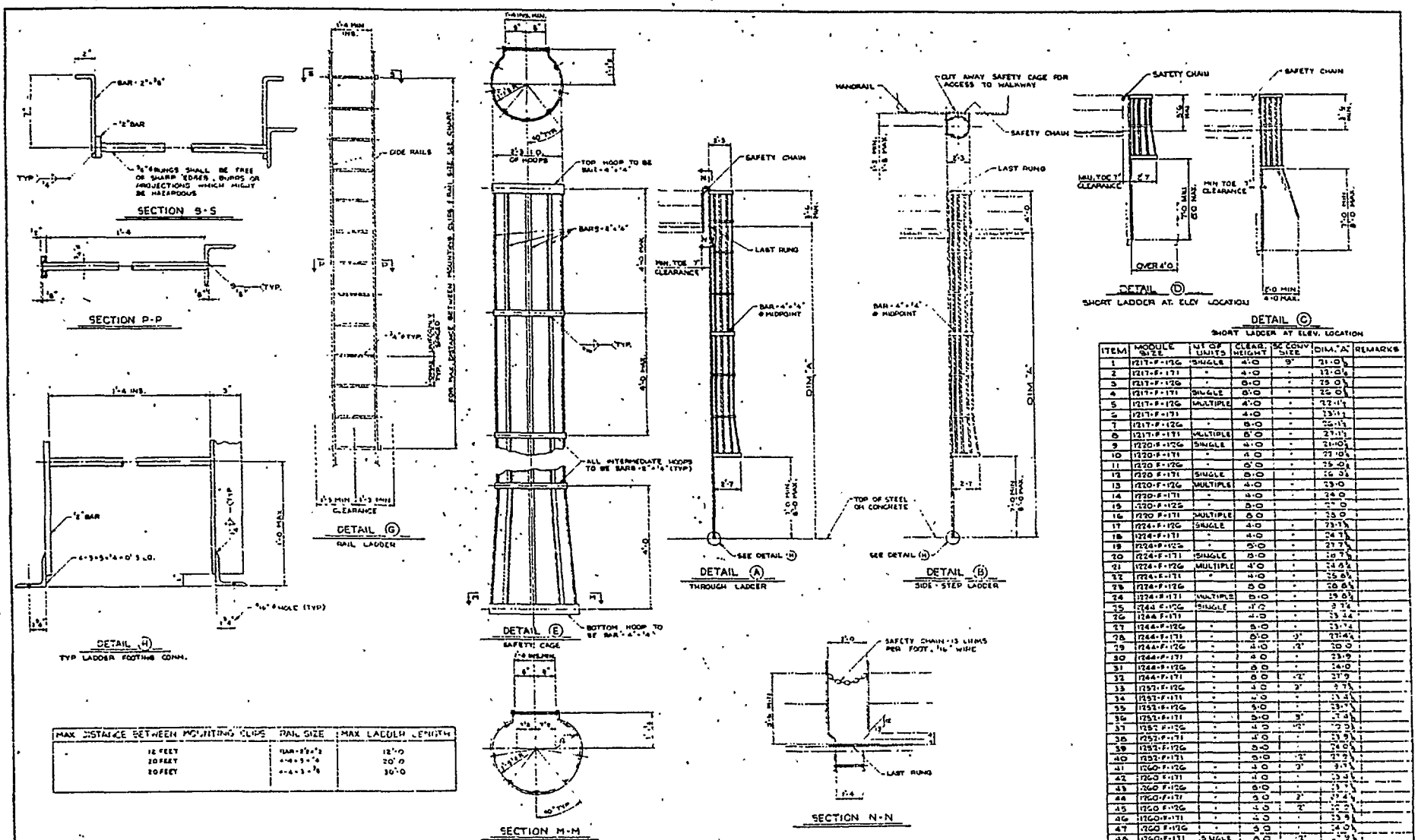

MAX. DISTANCE BETWEEN MOUNTING CLIPS	RAIL SIZE	MAX. LADDER LENGTH
10 FEET		12'-0
20 FEET		20'-0
30 FEET		30'-0

ITEM	MODULE SIZE	NO. OF UNITS	CLEAR HEIGHT	% CONV SIZE	DIM. "A"	REMARKS
1	1217-F-126	SINGLE	4'-0	9"	21'-0	
2	1217-F-171	"	4'-0	"	13'-0	
3	1217-F-126	"	6'-0	"	29'-0	
4	1217-F-171	SINGLE	6'-0	"	26'-0	
5	1217-F-126	MULTIPLE	4'-0	"	22'-0	
6	1217-F-171	"	4'-0	"	13'-0	
7	1217-F-126	"	6'-0	"	28'-0	
8	1217-F-171	MULTIPLE	6'-0	"	21'-0	
9	1220-F-126	SINGLE	4'-0	"	21'-0	
10	1220-F-171	"	4'-0	"	27'-0	
11	1220-F-126	"	6'-0	"	26'-0	
12	1220-F-171	SINGLE	6'-0	"	26'-0	
13	1220-F-126	MULTIPLE	4'-0	"	23'-0	
14	1220-F-171	"	4'-0	"	24'-0	
15	1220-F-126	"	6'-0	"	27'-0	
16	1220-F-171	MULTIPLE	6'-0	"	25'-0	
17	1224-F-126	SINGLE	4'-0	"	23'-5"	
18	1224-F-171	"	4'-0	"	24'-5"	
19	1224-F-126	"	6'-0	"	27'-5"	
20	1224-F-171	SINGLE	6'-0	"	26'-5"	
21	1224-F-126	MULTIPLE	4'-0	"	24'-5"	
22	1224-F-171	"	4'-0	"	25'-5"	
23	1224-F-126	"	6'-0	"	28'-5"	
24	1224-F-171	MULTIPLE	6'-0	"	29'-5"	
25	1244-F-126	SINGLE	4'-0	"	2'-4"	
26	1244-F-171	"	4'-0	"	23'-4"	
27	1244-F-126	"	6'-0	"	23'-4"	
28	1244-F-171	"	6'-0	3"	27'-4"	
29	1244-F-126	"	4'-0	2"	20'-0"	
30	1244-F-171	"	4'-0	"	23'-9"	
31	1244-F-126	"	6'-0	"	26'-0"	
32	1244-F-171	"	6'-0	2"	27'-9"	
33	1252-F-126	"	4'-0	3"	2'-1"	
34	1252-F-171	"	4'-0	"	23'-1"	
35	1252-F-126	"	6'-0	"	23'-1"	
36	1252-F-171	"	6'-0	3"	27'-1"	
37	1252-F-126	"	4'-0	2"	20'-3"	
38	1252-F-171	"	4'-0	"	23'-9"	
39	1252-F-126	"	6'-0	"	26'-0"	
40	1252-F-171	"	6'-0	2"	27'-9"	
41	1260-F-126	"	4'-0	3"	2'-1"	
42	1260-F-171	"	4'-0	"	23'-1"	
43	1260-F-126	"	6'-0	"	23'-1"	
44	1260-F-171	"	6'-0	3"	27'-1"	
45	1260-F-126	"	4'-0	2"	20'-3"	
46	1260-F-171	"	4'-0	"	23'-9"	
47	1260-F-126	"	6'-0	"	26'-0"	
48	1260-F-171	SINGLE	6'-0	2"	27'-9"	
49	ULTRA JET	"	4'-0	3"	2'-11"	
50	ULTRA JET	"	6'-0	"	23'-11"	
51						

CONFIDENTIAL INFORMATION

DRAWN BY CMC DATE 6-5-74
CHKD BY JSM DATE 6-5-74
CHKD BY DATE
SCALE
PRELIMINARY
FOR APPROVAL

ASARCO INCORPORATED
EL PASO, TEXAS

LADDER STANDARDS

AIR POLLUTION CONTROL SYSTEMS
Wheelabrator-Frye Inc.
PITTSBURGH, PA.

DRAWING NO. 1200-123

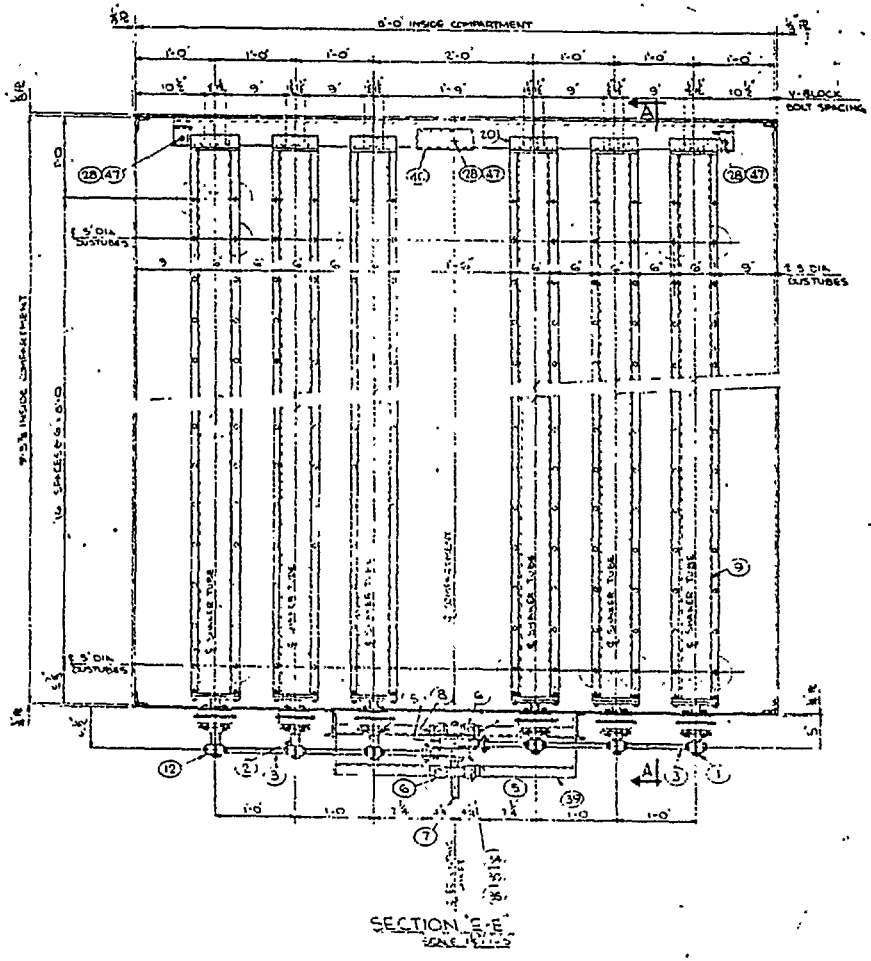

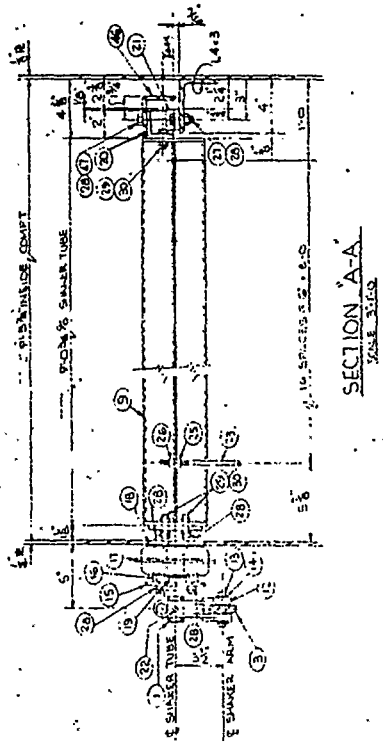

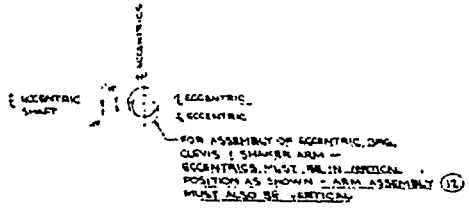

BILL OF MATERIAL

ITEM	QTY	PART NO	DNG NO	DESCRIPTION
1	3	294319	6983027	END SHAFT
2	3	294320	6983027	END SHAFT
3	2	293541	2982796	SHAKER BAR ASSEMBLY
4	4	229855	631A50A	CLEVIS HALF ASSEMBLY
5	2	226244	6358660	1 15/16 S - ECCENTRIC BEARING
6	2	198346		1 15/16 S - PILLOW BLOCK
7	1	186269	5882478	ECCENTRIC SHAFT
8	4	111572		BEARING STOP BLOCK
9	6	412673	72C275	SHAKER TUBE ASSEMBLY
10	1	191481		TYPE 5V - DYNA-V-SHEAVE 1 GROOVE 14.0 O.D. W/ 1 7/8 D BORE 1 1/2 K KEYWAY
11	1	239455		TYPE 3V - DYNA V SHEAVE 1 GROOVE 3.65 O.D. W/ 5/8 D BORE 1/4 K KEYWAY
12	6	293655	2982796	SHAKER ARM ASSEMBLY
13	6	295529	59N2268	PIN
14	12	320563		SNAP RING
15	6	233547		1 15/16 D DODGE SL - 4 BOLT FLG. BEARING
16	24	186155	58A2007	SPACER
17	6	232064	64B25	SPACER BOX ASSEMBLY
18	6	233061	64A2	GASKET
19	6	186236	58A1008	FELT SEAL
20	6	186183	58B1456	KNIFE EDGE ASSEMBLY
21	6	194208	53A1890	V - BLOCK
22	6	189763		ROLL PIN
23	304	201818	MIL-C-66	3 PRONG TUBE HOOK
24	304	ASSEMBLED IN FIELD		5/4 DUSTTUBE
25	304			5/16 - 18 N.C. HEX NUT
26	304			5/16 - 18 N.C. SELF LOCKING HEX NUT
27	12			3/8 - 16 NC x 1 1/4 LG HEX HD BOLT
28	93			3/8 - 16 NC SELF LOCKING HEX NUT
29	36			1/2 - 13 NC x 1 1/4 LG. HEX. HD. BOLT
30	40			1/2 - 13 NC SELF LOCKING HEX NUT
31	10			1/2 - 20 UNF x 1 1/4 LG HEX HD BOLT
32	10			1/2 - 20 UNC HEX NUT
33	10			1/2 LOCKWASHER
34	4			3/4 - 16 NC x 1 1/4 LG HEX. HD BOLT
35	4			3/4 BEVELED WASHER
36				
37	1	640309	1200-614	DRIVE GUARD
38	2	AS REQ'D		SHIM PACK
39	1	640311	1200-613	DRIVE FRAME
40	1	195686		3V-560 DYNA-V BELT
41	1			1/4 SQ KEY x 1 3/4 LG - 3rd END RD
42	1			1/4 SQ KEY x 1 3/4 LG - IN END RD
43	24			3/8 - 16 NC x 1 1/4 LG HEX HD BOLT
44	4			3/4 - 16 NF - 2 NUT
45	4			3/4 LOCKWASHER
46	1	BY FABRICATOR		HOLD DOWN L3 x 2 1/2
47	3			3/8 - 16 NC x 4 LG HEX. HD BOLT

NOTES:

1) AFTER SPACER BOX (17), SPACERS (18) & BEARING (3) ARE PLACED OVER END SHAFT, BOLT SPACER BOX TO WALL SHEET HAND TIGHT. PLACE TEMPLATE (39) OVER END SHAFT. IF NECESSARY REAM HOLES IN WALL SHEET FOR PROPER ALIGNMENT. AFTER ALIGNMENT BOLT SPACER BOX SECURELY - REMOVE TEMPLATE

2) OIL NYLON BUSHING WELL AFTER ASSEMBLY ... SUBSEQUENT OILING DEPENDS ON SERVICE CONDITIONS.

3) THE QUANTITIES LISTED IN THE ABOVE BILL OF MATERIAL ARE FOR ONE COMPARTMENT ONLY.

WORK THIS DWG WITH DWG^no 1200-642

CONFIDENTIAL INFORMATION

ASARCO INCORPORATED
EL PASO, TEXAS (1962)
AIR POLLUTION CONTROL SYSTEMS
WHEELABRATOR-FRYE INC.
PITTSBURGH, PA.

SECTIONS - SHAKER HOLD-DOWN TUBE SUSPENSION - 8'-2" & 7'-2" - MODEL SERIES 55 "U" TYPE

1200-641

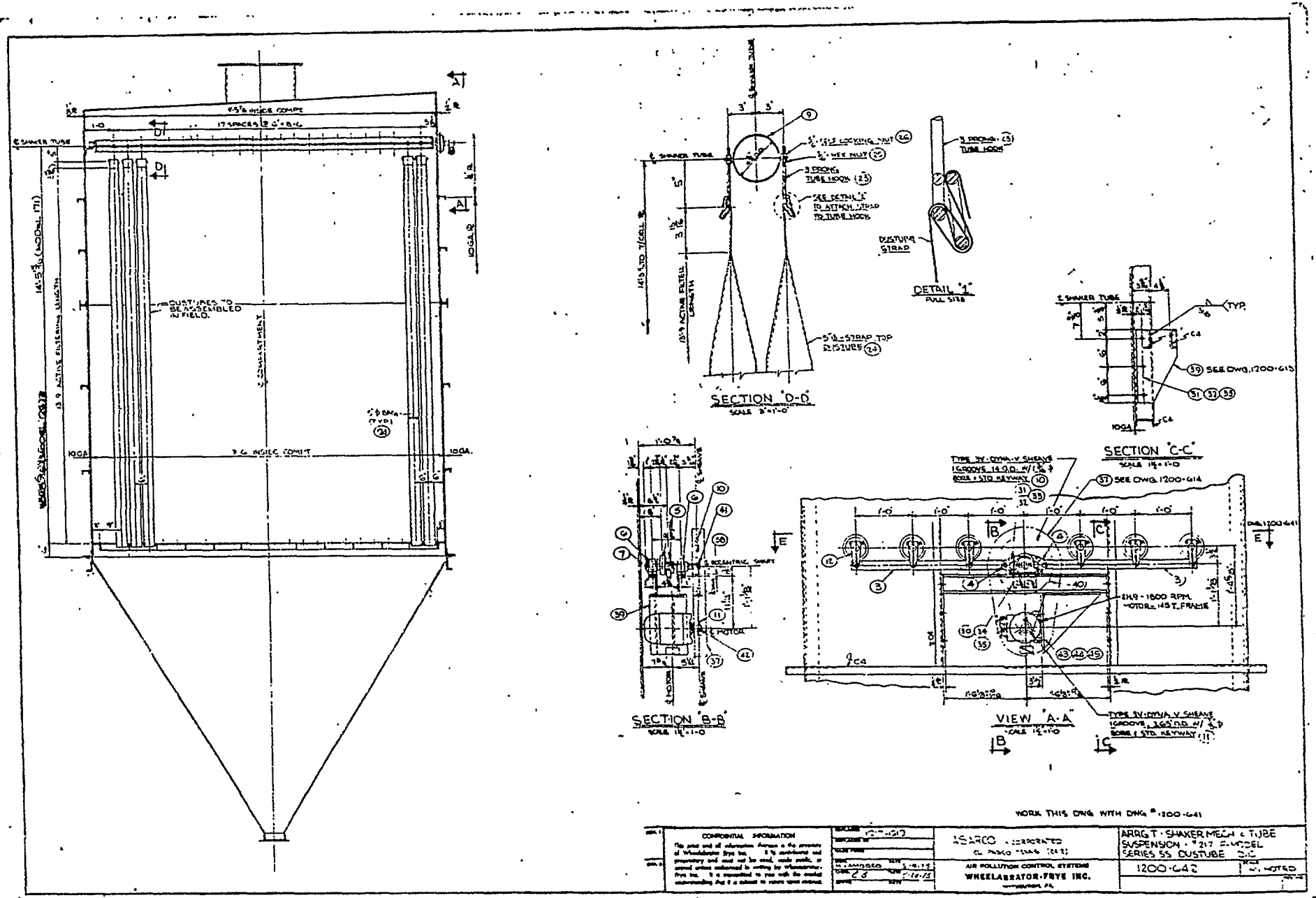

SECTION "D-D"
SCALE 3"=1'-0"
DETAIL "1"
FULL SIZE
SECTION "C-C"
SCALE 1½"=1'-0"
SECTION "B-B"
SCALE 1½"=1'-0"
VIEW "A-A"
SCALE 1½"=1'-0"
DUSTURES TO BE ASSEMBLED IN FIELD.
SEE DWG. 1200-613
SEE DWG. 1200-614
WORK THIS DWG WITH DWG # 1200-641
CONFIDENTIAL INFORMATION
ASARCO INCORPORATED
AIR POLLUTION CONTROL SYSTEMS
WHEELABRATOR-FRYE INC.
ARRG T · SHAKER MECH & TUBE
SUSPENSION · #217 F-MODEL
SERIES 55 DUSTUBE
1200-642

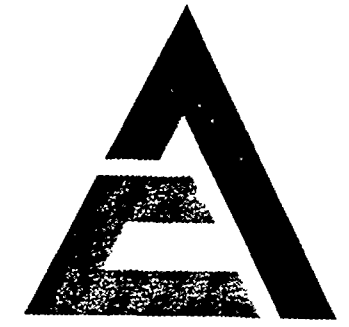

INSTRUCTIONS

TYPE RGZ STANDARD TEFC (143–447 FRAME) INDUCTION MOTORS

51X3451-03

TYPE RGZ

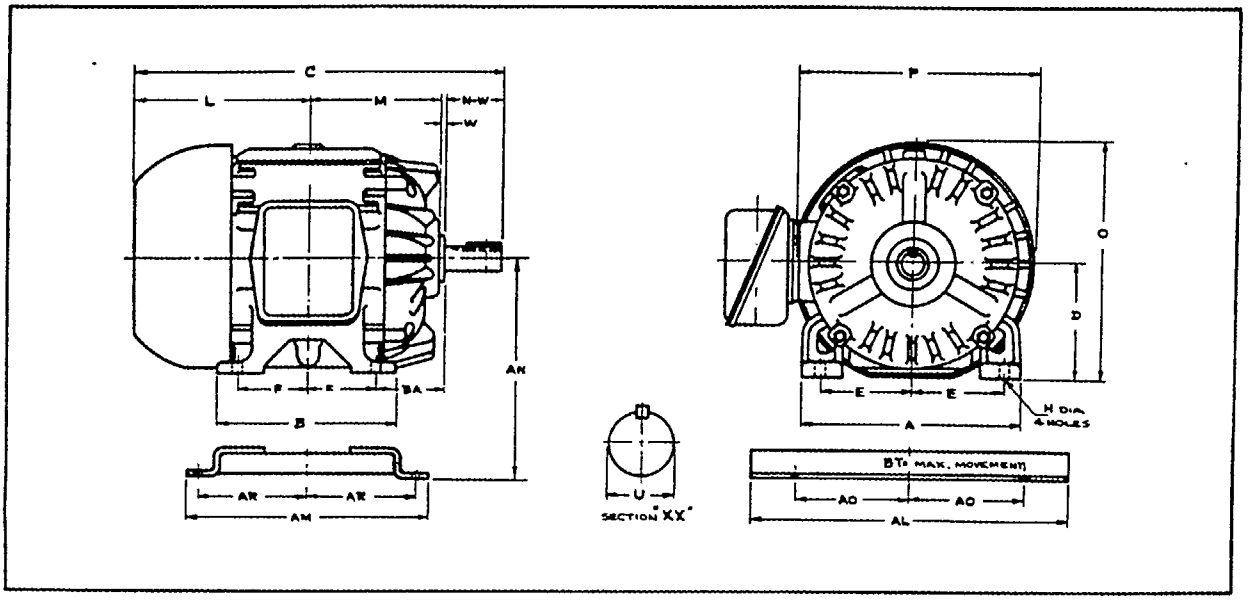

Frame	Key Width	Key Length	A	B	C	D	E	F	H	L	M	N-W	O	P	U	W	BA	AL	AM	AN	AO	AR	BT
143T	3/16	1-3/8	6-1/2	5	12-3/8	3-1/2	2-3/4	2	11/32	5-7/8	4-1/8	2-1/4	7-3/8	7-11/16	.8750		2-1/4	10-1/2	7-1/2	5	3-3/4	3-3/8	3
145T				6	13-3/8			2-1/2		6-3/8	4-5/8								8-1/2			3-7/8	
182T	1/4	1-3/4	9	6-1/2	14-3/8	4-1/2	3-3/4	2-1/4	13/32	6-5/8	4-7/8	2-3/4	9-13/16	9-11/16	1.1250	1/8	2-3/4	12-3/4	9-1/2	6	4-1/2	4-1/4	
184T				7-1/2	15-3/8			2-3/4		7-1/8	5-3/8								10-1/2			4-3/4	
213T	5/16	2-3/8	10-1/2	7-1/2	17-1/2	5-1/4	4-1/4	2-3/4		7-7/8	6-1/8	3-3/8	11-1/4	11-1/4	1.3750		3-1/2	15	11	7	5-1/4	4-3/4	3-1/2
215T				9	19			3-1/2		8-5/8	6-7/8								12-1/2			5-1/2	
254T	3/8	2-7/8	12-1/4	10-1/4	21-3/8	6-1/4	5	4-1/8	17/32	9	8-1/4	4	13-3/8	13-3/8	1.625		4-1/4	17-3/4	15-1/8	8-1/4	6-1/4	6-5/8	4
256T				12	23-1/8			5		9-7/8	9-1/8								16-7/8			7-1/2	
284T	1/2	3-1/4	14	12	24-5/8	7	5-1/2	4-3/4		10-1/2	9-3/8	4-5/8	14-3/4	15-1/2	1.875		4-3/4	19-3/4	16-7/8	9	7	7-1/2	4-1/2
286T				13-1/2	26-1/8			5-1/2		11-1/4	10-1/8								18-3/8			8-1/4	
284TS	3/8	1-7/8		12	23-1/4			4-3/4		10-1/2	9-3/8	3-1/4			1.625			--	--	--	--	--	--
286TS				13-1/2	24-3/4			5-1/2		11-1/4	10-1/8							--	--	--	--	--	--
324T	1/2	3-7/8	16	12-3/4	27-3/4	8	6-1/4	5-1/4	21/32	12	10-3/8	5-1/4	16-5/8	17-1/8	2.125	1/8	5-1/4	22-3/4	19-1/4	10-1/2	8	8-1/2	5-1/4
326T				14-1/4	29-1/4			6		12-3/4	11-1/8								20-3/4			9-1/4	
324TS	1/2	2		12-3/4	26-1/4			5-1/4		12	10-3/8	3-3/4			1.875			--	--	--	--	--	--
326TS				14-1/4	27-3/4			6		12-3/4	11-1/8							--	--	--	--	--	--
364T	5/8	4-1/4	18	13-1/2	30-7/8	9	7	5-5/8		13-1/2	11-1/8	5-7/8	18-1/4	18-1/2	2.375		5-7/8	25-1/2	20-1/2	11-1/2	9	9-1/8	6
365T				14-1/2	31-7/8			6-1/8		14	11-5/8								21-1/2			9-5/8	
364TS	1/2	2		13-1/2	28-3/4			5-5/8		13-1/2	11-1/8	3-3/4			1.875			--	--	--	--	--	--
365TS				14-1/2	29-3/4			6-1/8		14	11-5/8							--	--	--	--	--	--
404T	3/4	5-5/8	20	15-1/4	36-3/8	10	8	6-1/8	13/16	16-3/8	12-3/8	7-1/4	20-3/8	20-3/4	2.875	3/8	6-5/8	28-3/4	22-3/8	13	10	9-7/8	7
405T				16-3/4	37-7/8			6-7/8		17-1/8	13-1/8								23-7/8			10-5/8	
404TS	1/2	2-3/4		15-1/4	33-3/8			6-1/8		16-3/8	12-3/8	4-1/4			2.125			--	--	--	--	--	--
405TS				16-3/4	34-7/8			6-7/8		17-1/8	13-1/8							--	--	--	--	--	--
444T	7/8	6-7/8	22	17-1/2	42-1/4	11	9	7-1/4		19	14-3/8	8-1/2	22-3/4	23-1/2	3.375		7-1/2	31-1/4	24-5/8	14	11	11	7-1/2
445T				19-1/2	44-1/4			8-1/4		20	15-3/8								26-5/8			12	
447T				23	47-3/4			10		21-3/4	17-1/8								30-1/8			13-3/4	
444TS	5/8	3		17-1/2	38-1/2			7-1/4		19	14-3/8	4-3/4			2.375			--	--	--	--	--	--
445TS				19-1/2	40-1/2			8-1/4		20	15-3/8							--	--	--	--	--	--
447TS				23	44			10		21-3/4	17-1/8							--	--	--	--	--	--

INDOORS	ATMOSPHERE	
	Controlled	Partially Controlled
	Required: Even temperature, 10°F or more above dew point; relative humidity 50% or less; little dust, no harmful fumes.	Desired: Clean and dry as possible.
1. STORAGE PREPARATION		
a. Bearings	a. Nothing required. ball bearings grease-packed at factory.	
b. Shaft, flange surfaces . .	b. Coat with easily removable rust-preventive Tectyl No. 502-C mfd. by Ashland Oil & Refining Co., Ashland, Kentucky, or equal.	
c. Rodents	c. Prevent rodents, other small animals from nesting inside motor.	
d. Long Storage . . . . . (over 6 months)	d. Nothing else required.	d. 1) Disassemble main parts and clean thoroughly. 2) For open motors (except Super Seal) coat rotor machined surfaces with removable rust-preventive film (Tectyl No. 502-C). 3) Repaint previously painted surfaces before reassembly. 4) Remove condensation drain plugs (if present), insert silica-gel (dessicant) plugs in openings. 5) For drip-proof motors, install 1/2-pound bags of silica-gel in air inlets and outlets. Bags must be visible to insure removal before operation. 6) Cover completely to exclude dirt, dust, moisture, and other foreign materials. If possible, insert motor in strong, transparent plastic bag. Attach moisture indicator to side of motor, place several bags of silica-gel inside, then seal plastic bag. 7) If motor cannot be moved from base, cover all openings with adhesive plastic cloth and spray completely with peelable plastic. As a bare minimum, cover with heavy water-proof paper bag and tie securely around bottom. 8) If motor cannot be sealed in bag and relative humidity exceeds 50%, use space heaters (installed inside motor when possible) to keep it at least 10°F above ambient air.
2. STORAGE MAINTENANCE		
a. Bearings.	a. Rotate shaft several revolutions every month. Relubricate ball bearings after each year of storage.	
b. Shaft, flange surfaces. .	b. Check condition of rust preventive periodically, recoat as recommended by manufacturer. Tectyl No. 502-C may last 2 years.	
c. Long storage.	c. Nothing else required.	c. 1) Check silica-gel bags and plugs monthly; check weekly if subject to wide temperature variations. 2) When moisture indicator changes color, open plastic bag, remove used silica-gel, and install fresh bags. Reseal plastic bag. 3) Check operation and setting of space heaters. It is important they function properly.
3. SERVICE PREPARATION		
a. Cleaning.	a. Remove any spilled oil, water, dust, and dirt from interior and exterior. Wipe exterior. Blow out interior with low pressure air or hand bellows. Remove magnetic dust and particles with permanent magnet.	1) Remove all covers, plugs and dessicant bags. Remove rust preventive with petroleum solvent (Stoddard solvent). Replace pipe plugs.
b. Bearings.	b. **RELUBRICATE BEARINGS.** Make sure bearings and lubricant cavities are free from dirt and dust.	
c. Insulation Resistance . .	c. Measure insulation resistance of windings by meggering. Refer to Section 4, Maintenance.	

Figure 1. Motor Storage Procedures (Indoors)

OUTDOORS	INLAND		Salty or Industrial Atmosphere
	Dry	Humid	
	Usual Conditions		
	Dust, sand, sunheat, occasional rain and snow	Dust, sand, sunheat, rain, snow, organic (fungus) growth	Salt (other chemical)-laden moisture and dust, sand, sunheat, rain, snow, fungus growth, fumes, coal chemical dust, soot
4. STORAGE PREPARATION			
a. Bearings	a. Nothing required: ball bearings grease-packed at factory.		
b. Shaft, flange surfaces	b. Same as for indoor storage.		
c. Rodents	c. Same as for indoor storage.		
d. Long storage	d. Over six months	Over one month	
	Consult Norwood Plant for specification of protective coating for internal parts. Otherwise, take following precautions:		
	1) Same as indoor storage, refer to 1, d 1), 2), 3).		
		2) Spray all internal surfaces of open motors with one coat anti-fungus varnish (P. D. George No. 11137 protective sealer, or equal).	
	3) If motor can be moved, seal as for indoor storage, refer to 1, d 4) thru 8).		
	4) Provide roof or shed to protect from direct rain, snow, sunheat, sand storms.		
	5) If space heaters are not used, install dessicant plugs and bags in all motors.		
5. STORAGE MAINTENANCE			
a. Bearings	a Rotate shaft several revolutions at one month intervals. Relubricate ball bearings after each year of storage. Refer to Section 4, Maintenance.		
b. Shaft, flange surfaces	b. Same as indoor storage, refer to 2, b Outdoor life of Tectyl No. 502-C is approximately one (1) year.		
			1) Life of rust-preventive decreases in salt, acid, or alkaline atmosphere.
c. Long Storage	Same as indoor storage, refer to 2, c, 1) thru 3). Check dessicant weekly.		
6. SERVICE PREPARATION	Same as for indoor storage, refer to 3, a, b, c. Remove anti-fungus varnish in accordance with manufacturer's recommendations.		

A motor is in storage when:

A. It has been delivered to the job site and is awaiting installation.
B. It has been installed, but regular operation is delayed pending completion of plant construction.
C. There are long, idle periods between operating cycles.
D. The plant (or department) is shut down.

Figure 2. Motor Storage Procedures (Outdoors)

NOTE: The information contained in this book is intended to assist operating personnel by providing information about the general characteristics of the purchased equipment; it does not relieve the user of the responsibility of using accepted engineering practices during the installation, operation, or maintenance of this equipment. This book does not cover all design details. When information cannot be found herein, contact the nearest Allis-Chalmers office. (See Directory 25X8109.)

SECTION 2 INSTALLATION

LOCATION. Select a location for the motor and driven unit that will:

a. Be clean, dry, well ventilated, properly drained, and provide accessibility for inspection, lubrication, and maintenance (see dimensions). Out-door installations may require protection from the elements.

b. Provide adequate space for motor removal without shifting the driven unit.

c. Permit the motor to safely deliver adequate power. Temperature rise of a standard motor is based on operation at an altitude not higher than 3,300 feet above sea level.

FOUNDATION. Concrete (reinforced as necessary or required) makes the best foundation, particularly for large motors and driven units. In sufficient mass it provides rigid support that minimizes deflection and vibration. It may be located on soil, structural steel, or building floors, provided the total weight (motor, driven unit, foundation) does not exceed the allowable bearing load of the support. Allowable bearing loads of structural steel and floors can be obtained from Engineering Handbooks; building codes of local communities give the recommended allowable bearing loads for different types of soil.

Before pouring, locate foundation bolts by use of a template frame and provide secure anchorage (not rigid). It is recommended that a fabricated steel base be used between motor feet and foundation. See certified drawings of motor, base, and driven unit, for exact location of foundation bolts. Allow for grouting base when pouring. Cast the base foot pads level and in the same plane.

If vibration or noise will be objectionable (as in office buildings), it may be advisable to use vibration dampeners between the motor, driven unit, and foundation.

MOUNTING. Motors listed in these instructions may be floor-, wall-, or ceiling-mounted. When wall-mounted the shaft may be at any angle, provided external thrust is not transmitted to, nor absorbed by the motor bearings.

Mount the motor base (if used) on foundation or other support. Shim as required to level (vertical if wall-mounted). Use spirit level (check two directions at 90°) to insure motor feet will be in one plane (base not warped) when base bolts are tightened. Set motor on the base, install nuts and snug - DO NOT TIGHTEN.

NOTE: Base mounted assemblies of motor and driven unit are aligned at the factory. However, experience has shown that bases, no matter how rugged or deep in section, will twist during shipment. Therefore, the alignment must be checked after mounting.

ALIGNMENT. Reliable, trouble-free, and efficient operation of a motor-driven unit depends on the correct alignment of motor and driven shafts. Misalignment may be the cause of:

a. Noisy operation

b. Vibration

c. Premature bearing failure

d. Excessive coupling wear

Factors that may change the alignment of the unit are:

a. Settling of the foundation

b. Distortion of the base

c. Settling of the building

d. Shift of motor or driven unit on the foundation

e. Temperature differences causing difference in shaft heights.

The following checking procedure applies to a ball bearing unit, consisting of motor, flexible coupling, and a driven component mounted on a common base. Although applicable to all types of flexible couplings, it is primarily intended for the pin and rubber bushing type. For other types, where the procedures differ, refer to the coupling manufacturer's Installation and Maintenance Instructions.

Check alignment as follows:

NOTE: This procedure is for motors not requiring an offset height to allow for temperature rise of the driver. In such cases, see Extreme Service.

a. Disconnect the coupling halves.

b. Test for parallel and angular alignment one plane at a time (horizontal and vertical) with a dial indicator as shown in Figure 3.

Proceed as follows:

(1) Scribe index lines on the coupling halves (as shown) or mark where the indicator point rests.

(2) Set indicator dial to zero at starting point.

(3) Slowly turn BOTH coupling halves so that indicator point remains on the mark.

(4) Observe dial reading 180° from start.

(5) Acceptable parallel alignment occurs when the total indicator reading does not exceed 0.004 in.

Acceptable angular alignment occurs when the total indicator reading does not exceed 0.004 in./ft. (radius to dial indicator = one foot).

Correct excessive parallel and angular misalignment by inserting shims under motor feet and/or driven unit feet. Retest alignment after each change. For additional alignment information, see factory instructions 51X1175.

DRIVE SYSTEMS. Successful motor operation depends on proper selection of the drive. The accompanying NEMA Standard table lists the minimum requirements for the various drives. This table assumes that the total belt pull does not exceed one and one-half times the net belt pull. Further, the service

factor is taken as one. Finally, all calculations have been based on the use of standard, high-capacity belts. For long bearing life, the minimum pitch diameters should be avoided, particularly when the load is not smooth and steady. It is important that shaft axes be parallel, particularly for belt or gear drives.

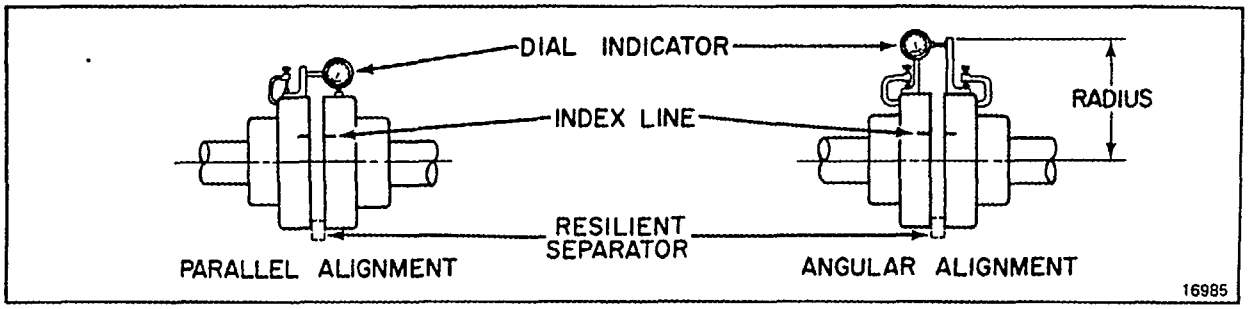

Figure 3. Test Alignment, Dial Indicator

NEMA STANDARD MINIMUM DRIVES

Frame Number	Horsepower at Synchronous Speed, Rpm				V-belt Sheave			
					Conventional		Narrow	
					A, B, C, D and E (See Note I)		3V, 5V and 8V (See Note II)	
	3600	1800	1200	900	Minimum Pitch Diameter, Inches	Maximum Width	Minimum Outside Diameter, Inches	Maximum Width
143T	1½	1	¾	½	2.2		2.2	
145T	2-3	1½-2	1	¾	2.4		2.4	
182T	3	3	1½	1	2.4		2.4	
182T	5				2.6		2.4	
184T			2	1½	2.4		2.4	
184T	5				2.6		2.4	
184T	7½	5			3.0		3.0	
213T	7½-10	7½	3	2	3.0		3.0	
215T	10		5	3	3.0		3.0	
215T	15	10			3.8		3.8	
254T	15		7½	5	3.8		3.8	
254T	20	15			4.4		4.4	
256T	20-25		10	7½	4.4		4.4	
256T		20			4.6		4.4	
284T			15	10	4.6		4.4	
284T		25			5.0		4.4	
286T		30	20	15	5.4		5.2	
324T		40	25	20	6.0	See Note III	6.0	See Note IV
326T		50	30	25	6.8		6.8	
364T			40	30	6.8		6.8	
364T		60			7.4		7.4	
365T			50	40	8.2		8.2	
365T		75			9.0		8.6	
404T			60		9.0		8.0	
404T				50	9.0		8.4	
404T		100			10.0		8.6	
405T			75	60	10.0		10.0	
405T		125			11.5		10.5	
444T			100		11.0		10.0	
444T				75	10.5		9.5	
444T		125			11.0		9.5	
444T		150					10.5	
445T			125		12.5		12.0	
445T				100	12.5		12.0	
445T		150					10.5	

NOTE I - As covered by Engineering Standards - Specifications for Drives Using Multiple V-Belts (A, B, C, D and E Cross-sections)*, dated January 1964.

NOTE II - As covered by Standard Specifications for Drives Using Narrow V-Belts (3V, 5V and 8V Cross-Sections)*, dated July 1964.

NOTE III - The width of the sheave shall be not greater than that required to transmit the indicated horsepower but in no case shall it be wider than 2 (N-W) - 1/4.

NOTE IV - The width of the sheave shall be not greater than that required to transmit the indicated horsepower but in no case shall it be wider than 2 (N-W).

NOTE V - For the assignment of horsepower and speed ratings to frames, see MG 1-13.02.a and MG 1-13.06.a.

Flexible Coupling. Separate the coupling and mount a dial indicator as shown in Figure 3. (Check alignment as previously discussed.)

Chain. Avoid use with vertical shafts. Install so that top (upper side) of chain is driving side. Make certain that sprockets or gears are in same plane. Use straight edge of sufficient length and check across side faces, both sides of shafts. Observe that chain leaves and enters sprockets straight; there must be no twist or wrack. Observe NEMA limits on pitch diameter and follow recommendations of chain manufacturer.

Gear. Accurate alignment and rigid mounting are essential for a satisfactory gear drive. Pitch diameter and width should not be outside recommended NEMA limits. Check the factory for bearing thrust capacity before installing helical gears. In all cases, gear teeth must be centered with each other, correct

shaft center distance must be obtained, and gear faces must be parallel (check with straight edge and feeler gage on both sides of shafts). Gear teeth must fully engage, to a depth giving approximately 0.002 inch minimum back lash; avoid engagement so deep that gears will deflect or bind. Test for proper alignment by rotating motor shaft by hand, checking driven gear for back lash through one complete revolution. Test back lash and face parallelism again after tightening mounting bolts.

Flat Belt. Avoid use with vertical shafts. Position pulleys so that crowns are in same plane (if not, belt will be unevenly loaded and may run off pulleys). Install smooth side of belt against pulley surfaces and just tight enough to carry rated load without slipping. Ample width avoids the need for excessive tension. Observe NEMA or belt manufacturer's limits for pulley sizes.

V-Belt. V-belt drives are not recommended for belt speeds above 6,500 feet per minute. Use only matched-belt sets. Follow the V-belt manufacturer's recommendations for sheave pitch diameter, or follow NEMA standards. V-grooves must be in line; belts must enter and leave sheaves with no side bending. Tighten just enough to prevent slippage under rated load. Some slipping may be allowed in starting high inertia loads to avoid excessive belt tension. Protect belts from grease and oil. Do not use belt dressing at any time.

VIBRATION. After alignment has been completed, but before drive is engaged, tighten motor mounting bolts, run motor at no load, and check for vibration. If present and excessive (3500 rpm and above, .001 inch; 1700-3499 rpm inclusive, .0015 inch; less than 1700 rpm, .002 inch), loosen one mounting bolt. If vibration decreases, add shims until retightening of bolt reduces or eliminates vibration.

a. When alignment and vibration of motor are within limits, engage drive, run at as low load as possible, and check again for vibration. If present and excessive, add shims under driven unit mounts in same manner as for motor.

b. Recheck alignment after any change in shims to control vibration.

GROUTING. Grout compensates for unevenness in the foundation and base and distributes the weight of the unit uniformly over the foundation. It also prevents the unit from shifting after mounting and alignment. It is essential that the unit be expertly grouted by use of non-shrinking grout. The mix required varies with the type of unit to be grouted, location and amount of grout. The instructions included with the non-shrinking grout package will provide the required information for the proper mix for individual applications.

Grout the unit as follows:

a. Build a form of plywood or thin planking around the foundation to contain the grout. Support adequately to prevent deformation.

b. Soak the top of the concrete pad thoroughly with water before grouting. Remove all surface water before pouring.

c. A recommended mix of grout that is satisfactory for most applications is as follows:

> **Dry Mix.** One sack Portland Cement.
>
> Two parts well graded, clean, dry sand.
>
> One-pound bag grout additive.

This additive is one way to counteract the plastic shrinkage and settlement of a cement-sand mix.

To make grout additive, add 2 grams of unpolished aluminum powder (Merck Co. #0770. or equivalent, available at local pharmacists) to 1 lb. of clean dry flint sand (50 mesh screen passing 25% preferred). Mix thoroughly and seal in a plastic bag. Keep additive dry until ready for use.

NOTE: The effect of the aluminum powder is lost if the mix is allowed to stand, uncast, for 45 minutes after adding water to the dry mix.

d. Pour the grout through the openings in the base. While pouring, tamp liberally to fill all cavities and prevent air pockets. The grout thickness under the base must be a minimum of 1 inch. To prevent the base from shifting, fill under the base-plate at least 4 inches under all four edges. Prevent grout from interfering with motor or driven unit mounting bolts to allow shifting of bolts as necessary.

NOTE: If pouring and tamping the grout will trap air in some places, temporarily place small diameter tubes (thick-walled rubber hose) to provide venting. Remove the tubes after grout has filled the cavity; then pour the remainder.

e. After the grout has thoroughly hardened, retighten the foundation bolts, check the alignment, and connect the coupling halves.

Approximately fourteen days after pouring or when the grout has thoroughly dried, apply an oil base paint to the exposed edges of the grout to protect it from air and moisture.

DOWELING. Doweling the motor (and driven unit) accomplishes the following:

a. Prevents movement.

b. Eases realignment if motor is removed from base.

c. Temporarily holds the motor, should mounting bolts loosen.

Insert the dowels as follows:

(1) Check the alignment after the unit has been in operation approximately one week. Correct if necessary.

(2) Through opposite motor feet drill through and into the base, holes of a diameter 1/64 inch less than dowel pin. Clean out the chips.

(3) Ream the holes in the feet and base to the proper diameter for the pins (light push fit). Clean out the chips.

(4) Insert pins to be approximately flush with motor feet.

NOTE: It is recommended that driven unit be doweled. Refer to the manufacturer's installation instructions for the procedure to follow.

EXTERNAL WIRING. Starting and over-load control devices must be matched to motor rating. For safety or convenience they may need to be installed some distance from the motor. Follow the control manufacturer's instructions to make proper installation and connections.

Observe the following:

a. Connect electrical power supply to conform with National Electrical Code and any local regulations. Line voltage and wire capacity must match motor rating stamped on the nameplate.

b. Only when the drive is disconnected, momentarily energize the motor to check that rotation is in the proper direction.

c. If motor is three-phase type, reverse rotation (if required) by inter-changing any two of the three power leads.

If two-phase, inter-change stator leads of either phase, being careful not to interchange leads from one phase to the other.

EXTREME SERVICE. If motor application is abnormal (high temperature, extreme vibration, etc.), consult Norwood Plant for special instructions for installation. In all cases where a foot-mounted motor is direct coupled, check vertical alignment (parallelism) of coupled drive as follows:

a. Operate unit until normal temperature is reached (may require 1 to 2 hours).

b. Shut down motor and lock out switch.

c. Mount dial indicator as in Figure 4.

d. Rotate shafts, noting readings at 0° and 180° (top and bottom). If within 0.004 inch total indicator reading, or other limit specified by Norwood Plant, unit is satisfactory for operation.

e. If not within limits, add or remove shims as required to raise or lower motor.

f. If shims are changed for high temperature operation, repeat parallel and angular alignment procedures.

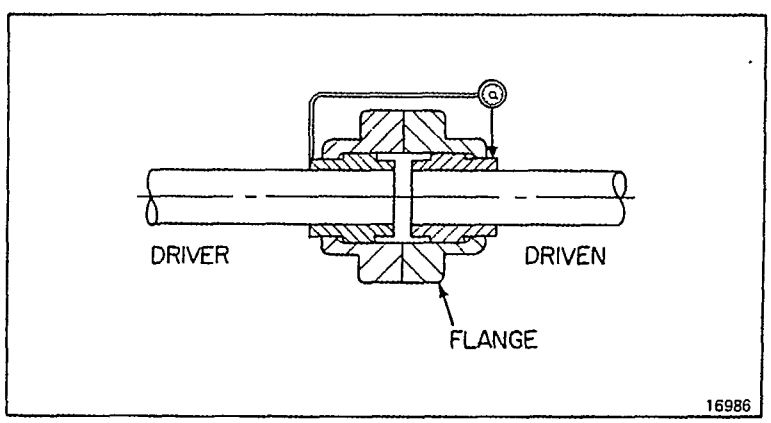

Figure 4. Check of Vertical Alignment

SECTION 3 OPERATION

INITIAL START. After installation is completed, but before motor is put in regular service, make an initial start as follows:

1. Motor starting, and control device connections must agree with wiring diagrams.

2. Voltage, phase, and frequency of line circuit (power supply) must agree with motor nameplate.

3. If motor has been in storage, either before or after installation, refer to Section I for instructions to prepare for service.

4. Check motor service record and tags accompanying motor to be certain bearings have been properly lubricated.

   When shipped from the factory, ball bearings have been lubricated to give six months satisfactory service.

5. If possible, remove external load (disconnect drive) and turn shaft by hand to insure free rotation. This may have been done during installation procedure; if so, and conditions have not changed since. this check may not be necessary.

   a. If drive is disconnected, run motor at no load long enough to be certain that no unusual condition develops. Listen and feel for excessive noise, vibration, clicking, or pounding. If present, stop motor immediately. Investigate the cause and correct before putting motor in service.

   b. If drive is not disconnected, interrupt the starting cycle after motor has accelerated to low speed. Carefully observe for unusual conditions as motor coasts to a stop. Repeat several times if necessary.

CAUTION

Repeated trial starts can overheat the motor (particularly for across-the-line starting). If repeated trial starts are made, allow sufficient time between trials to permit heat to dissipate from windings or rotor to prevent overheating. Starting currents are several times running currents, and heating varies as the SQUARE of the current.

6. When checks are satisfactory, operate at minimum load and look for any unusual condition. Increase load slowly to maximum; check unit for satisfactory operation.

NORMAL OPERATION. Start the motor in accordance with standard instructions for the starting equipment used. Some loads should be reduced to the minimum, particularly reduced voltage starts, and or high inertia connected loads.

   a. Run high temperature motors (Class H insulation) at reduced load until bearings reach operating temperature.

VOLTAGE REGULATION. Motors will operate successfully under the following conditions of voltage and frequency variation, but not necessarily in accordance with the standards established for operating under rated conditions:

   a. When the variation in voltage does not exceed 10% above or below normal, with all phases balanced.

   b. When the variation in frequency does not exceed 5% above or below normal.

   c. When the sum of the voltage and frequency variations does not exceed 10% above or below normal (provided the frequency variation does not exceed 5%).

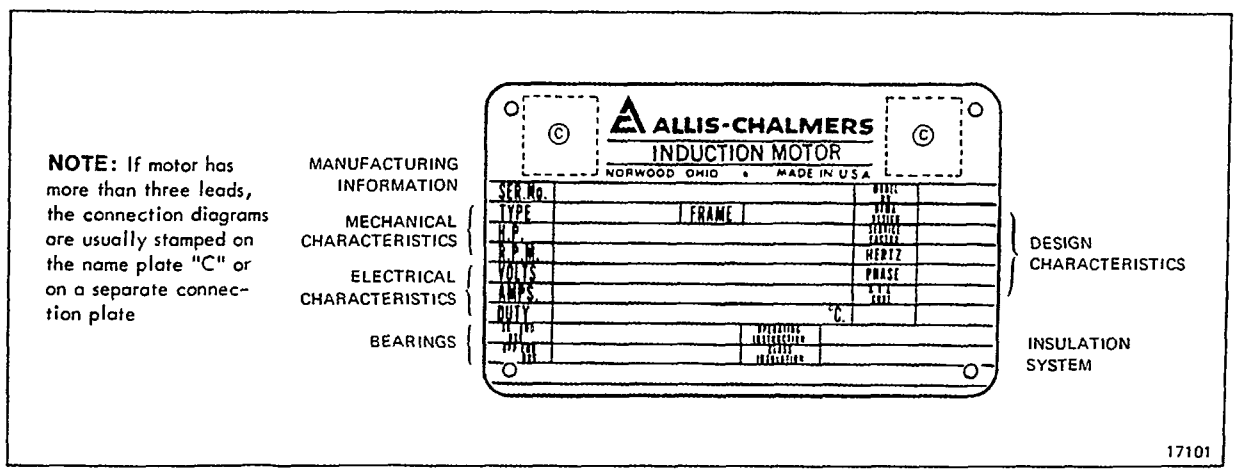

Figure 5. Rating Plate.

TROUBLE SHOOTING. Between regular maintenance inspections, be alert for signs of motor trouble. Common symptoms are listed in the following table. Correct any trouble immediately and AVOID COSTLY REPAIR AND SHUT DOWN.

SYMPTOM	POSSIBLE CAUSES	CURE
1. Fine dust under coupling employing rubber buffers or pins.	Misalignment.	Realign set.
2. Motor won't start.	Usually line trouble - single-phasing at starter.	Correct. Check source of power supply. DON'T check with motor energized! Check overloads, controls and fuses. Check voltage, compare with rating plate data.
	Improper connection.	Check connections with diagram.
	Load too heavy. Disconnect motor to see if it starts without load.	Reduce load - or replace motor with unit of greater capacity.
3. Excessive hum.	High voltage.	Check input voltage and for proper connections.
	Unbalanced rotor.	Balance with washers on die cast balance lugs.
4. Regular clicking.	Foreign matter in air gap.	Take out rotor; remove matter.
5. Rapid knocking.	Bad bearing; dirt in grease.	Replace bearing; renew grease.
6. Vibration.	Misalignment.	Realign set.
	Vibration in driven machine. Run motor disconnected for check.	Eliminate source in machine, if possible. Or change to a flexible belt drive may be in order.
7. Vibration - following motor repair.	Rotor out of balance, due to holes drilled or weights shifted . . . new rotor.	Balance rotor.
8. Motor over-heating. (Check with thermometer - don't depend on hand).	Overload. Measure load; compare with nameplate rating.	Check for excessive friction in motor, drive or machine. Reduce load, or replace motor with unit of greater capacity.
	Single phase.	Check current, all phases.
	Dirt in motor. Check flow of ventilating air.	Blow out motor. Use solvent on wound section if necessary.
	Unbalanced voltage.	Check voltage, all phases.
	Rotor rubbing on stator.	Replace bearings.
	Open stator windings.	Disconnect motor from load to see idle amps balance in all three phases. Check stator resistance in all three phases for balance.
	Over voltage.	Check voltage.
	Ground.	Locate with test lamp or megger and repair.
	Improper connections.	Recheck connections.
9. Bearing over-heating.	Misalignment.	Realign set.
	Too much tension in chain or belt drive.	Reduce tension to point of adequacy.
	Excessive end thrust.	Reduce thrust from drive or machine.
	Too much grease (ball or roller bearing).	Relieve supply to point set by manufacturer.
	Insufficient lubricant.	Add - up to point set by manufacturer.

SECTION 4 MAINTENANCE

GENERAL. Routine, regular maintenance is the best assurance of trouble-free, long-life motor operation. It prevents costly shutdown and repairs. Major elements of a controlled maintenance program are:

a. Trained personnel who KNOW the work.

b. Systematic records, which contain at least the following:

(1) Complete nameplate data (Motor Service Record).

(2) Prints (Wiring diagrams, certified outline, sectional view).

(3) Parts list (see rear of this section).

(4) Stock of essential parts.

(5) List of spare motors in storage.

(6) Alignment data (departures from perfect alignment, allowance for high temperature).

(7) Results of regular inspection (Motor Service Record).

(8) Repairs (Motor Service Record).

(9) Lubrication data:

a) Method of application.

b) Types of grease for wet, dry, hot, or adverse locations.

c) Stock of lubricants.

d) Maintenance cycle by locations (Some require more frequent lubrication).

e) Record for each motor (Motor Service Record).

REGULAR MAINTENANCE. Several of the more important items of good maintenance are discussed in the following paragraphs. Others should be added when adverse or unusual conditions exist.

Inspection. Each motor should be inspected at regular intervals. The frequency and thoroughness will depend on the amount of operation, nature of service, and the environment.

Cleanliness. The motor exterior should be kept free of oil, dust, dirt, water, and chemicals. For fan-cooled motors, it is particularly important to keep the air intake opening free of foreign material. Do not block air outlet.

Moisture. On non-explosion proof TEFC motors, a removable plug in the bottom center of the motor, yoke or housing, permits removal of any accumulated moisture. Drain regularly.

Protection Motors operating intermittently in very damp locations should be protected by space heaters. To retard corrosion, grease all machined fits when the motor is reassembled after a maintenance check. Refer to Section I, Storage.

Loading. Guard against overloading. Overloading causes overheating and overheating means shortened insulation life. A motor subjected to a 10° temperature rise above the maximum limit for the insulation will have its insulation life reduced.

While somewhat less serious, underloading a motor is improper. It does lower the power factor, which results in higher power cost. Any motor consistently underloaded should be replaced by one of lower power rating. The amount of work a motor can safely produce is not easy to measure. A rule of thumb for most cases would be: If the input terminal voltage agrees with the rating plate, the amps are equal to, or less than, the rating plate value; and the speed (R. P. M.) is equal to, or more than rating plate specification, then the motor is not overloaded and is probably developing its rated horsepower.

Duty is also part of the H. P. relationship. Motors have a time requirement, which is specified as duty at a given ambient temperature and, horsepower being work, produces heat. This "work-heat" added to the ambient heat, then becomes the environment temperature of the motor. Duty is therefore expressed in time at a given starting temperature.

Note: Duty and the ambient temperature cannot be exceeded without exposing the motor to the hazards of overheating. If the starting temperature (ambient) is greater than the rating plate specification the motor output H. P. should be reduced to compensate; refer to the factory for instructions if this problem occurs.

Temperature. An induction motor operating under normal conditions becomes quite warm. Although some places may feel hot to the touch, the unit will be within guaranteed limits if the unit is operated within the rating plate limits and ventilation is not restricted.

The Total Temperature, not the temperature rise, is the measure of safe operation. Operating conditions should be investigated if the total temperature measured *exceeds: Class B - insulation - 110°C (230°F): Class F - 135°C (275°F); Class H - 150°C (302°F).

*(See "Temperature Measurement Devices" IEEE No. 119)

Insulation. Check insulation resistance periodically. Any approved method of measuring insulation resistance may be used, provided the voltage across the insulation is at a safe value for the type and condition of the insulation. A hand cranked megger of not over 500 volts is the most convenient and safest method. Standards of the Institute of Electrical and Electronics Engineers, Inc., recommend that the insulation resistance of stator windings at 75° C, measured at 500 volts dc, after one minute should not be less than:

$$\frac{\text{Rated Voltage of Machine} + 1000}{1000} = \text{Insulation Resistance in Megohms}$$

This formula is satisfactory for most checks. For more information, see IEEE Standard No. 43, "Recommended Practice for Insulation Resistance Testing of AC Rotating Machinery."

If the insulation fails to meet this standard, the motor may be dried out by heat from a warm air oven, electric strip heaters, heat lamps, or by passing current through the windings. The temperature should not exceed 167° F (75° C). Remove the bearing housings and direct a fan on the motor to carry the moisture away.

For oven drying, a forced circulation type oven rather than a radiant type is recommended. In radiant type ovens, some motor parts would be scorched or oven burned before the more remote parts reach a desirable drying temperature.

When the motor is dried by passing alternating current through the windings with the bearing housings removed, the rotor must be centered in the stator core. Make certain that the air gap is uniform by wedging fiber strips in the lower portion of the gap. A controlled current of the same number of phases and the same or lower frequency is applied to the terminals. Voltage should not exceed 10% of normal, and it should not cause more than 60% of normal full-load current to pass through the windings. A voltage 15% of normal may be applied after the insulation resistance has reached one-half of the minimum value determined by the formula. The recommended drying out temperature of 167° F (75° C) should not be exceeded.

CLEANING. Clean the motor, inside and outside, regularly. Frequency depends upon actual conditions existing around the motor. Use the following procedures, as they apply:

a. Wipe off dirt, dust, oil, water, other liquids from external surfaces of motor. These materials can work into, or be carried into, the motor windings and may cause overheating or insulation breakdown.

b. Remove dirt, dust, other debris from ventilating air inlet. Do not permit such matter to accumulate near the inlet. Do not operate motor with air outlet blocked.

c. Clean open motors internally by blowing with clean, dry compressed air at 40 to 60 psi. If the conditions warrant, use a vacuum cleaner.

d. When dirt and dust are solidly packed, or windings are coated with oil or greasy grime, disassemble the motor and clean with solvent. Use only high-flash naphtha, mineral spirits, or Stoddard solvent. Wipe with solvent dampened cloth, or use suitable soft bristle brush. DO NOT SOAK. Oven dry (150° F) solvent-cleaned windings thoroughly before reassembly.

e. Windings of SUPER-SEAL (encapsulated stator) motors may be rinsed or sprayed with solvent, and immediately wiped dry with a cloth. These windings may be cleaned with water and a fugitive detergent (ammonium oleate), or common household detergents. Rinse with clean, clear water to remove all detergent. Hot water or low-pressure steam may be used. Wipe excess water from metal surfaces and oven dry at 200° F.

f. After cleaning and drying windings, check the insulation resistance.

BEARINGS. Long life of bearings is assured only by maintaining proper alignment, proper belt or chain tension, and good lubrication at all times. Incorrect alignment of solid couplings can cause excessive load on bearings, and excessive vibration. Incorrect alignment of flexible couplings can produce vibration and thrust. Misalignment of belt or chain drives can cause thrust or harmful shaft oscillation. Improper alignment of gear drives will produce shock loads and probably bend the shaft.

Too much belt or chain tension often causes overheating of bearings. Also, bearings tend to overheat when pulley centers are too close, pulley diameters are too small, or belt speed is too high.

A serious mistake is daily lubrication of bearings. It is a dangerous practice, particularly when grease is added without removing the drain plug. The excess grease can cause hot bearings and is usually forced into and through the inner bearing cap, to be thrown into the windings. Proper lubrication is desired, but some under-lubrication is less dangerous than over-lubrication.

Lubrication. Prior to shipment, motor bearings are lubricated with the proper amount and grade of grease to provide six months of satisfactory service under normal operation and conditions. It is good practice, however, to visually check bearing grease of newly installed motors for proper lubrication after approximately three months operation.

Grease For best results, grease should be compounded from a lithium soap base and a good grade of petroleum oil. It should be of No. 2 consistency and stabilized against oxidation. Operating temperature range should be from -15° F to +250° F for Class B insulation, and to +300° F for Class "F" and "H". Most leading oil companies have special bearing greases that are satisfactory.

Relubricate bearings each six months (oftener if conditions require), as follows:

MOTOR SPEED (R.P.M.)	*RELUBRICATING FREQUENCY
3600	6 MONTHS (4,000 HOURS)
1800 OR LESS	12 MONTHS (8,000 HOURS)

*Operating environment may dictate more frequent lubrication.

1. Stop the motor. Lock out the switch, particularly if end shield is to be withdrawn.

2. Thoroughly clean off and remove pipe plugs from bearing housing.

3. Remove hardened grease from drains with stiff wire or rod.

4. Add grease to inlet with hand gun until small amount of new grease is forced out drain. Catch used grease in suitable container.

Note: For vertical shaft motors, it is wise to check the inner cap of the top bearing for grease slumping through the bearing and filling the inner cap grease reservoir. Since it is necessary to remove the housing, this check is best done during periodic shut down inspections. (Bottom bearing inner cap should be 2/3 full.)

5. Remove excess grease from ports, replace inlet plugs, and run motor 1/2 hour before replacing drain plug.

6. Put motor back in operation.

Replacement. Replacement bearings may be of a manufacture different from that used in the motor. When ordering, specify:

a. Identifying numerals stamped on bearing (also manufacturer, if different),

b. Tolerance Class ABEC-1,

c. Electric motor quality,

d. Internal radial clearance AFBMA-3 is standard, for all Norwood motors.

CAUTION

Never use A.F.B.M.A.-0 Bearings on enclosed motors with Class "F" or "H" insulation.

Replace bearings as follows:

1. Remove end shields (bearing housings). Be sure to take out bolts holding inner caps before pulling shields from shaft.

2. Use bearing puller and exert force only on inner race to remove bearing from shaft.

3. Heat new bearing in an oven to 200° F. While hot, slide bearing on shaft, make certain inner race makes firm, even contact with shaft shoulder.

CAUTION

Do not subject bearing to impact.

4. Let bearing cool. Pack bearing caps and assemble end shields. Be sure inner caps are clean and secured.

Operating Position (Shaft)	Grease Quantity			
	Front or Top		Rear or Bottom	
	Outer	Inner	Inner	Outer
Horizontal	Full	*None	*None	Full
Vertical	Full	None	2/3 Full	Full

* Except for a thin cylinder (line) of grease around shaft at cap clearance.

Parts Identification

The drawings in this book are of the standard design. Most of the parts should be easy to identify, if however, there is some deviation from your machine, consult the factory or the drawings supplied with your unit.

Order these and other parts, as required, from Allis-Chalmers Manufacturing Company, 4620 Forest Ave., Norwood, Ohio 45212, or through the nearest sales office. Give the following information:

a. Motor serial number,

b. Other data stamped on nameplate,

c. Name and number of part (see cross section and parts list),

d. Quantity required.

RECOMMENDED SQUIRREL-CAGE INDUCTION AND SYNDUCTION® MOTOR PARTS

ITEM	DESCRIPTION OF PART	RECOMMENDED MINIMUM STOCK NUMBER OF UNITS IN OPERATION			
		1 to 4	5 to 9	10 to 20[1]	10 to 20
1	Motor Complete	0	0	0	1
2	Stator Coils with Winding Supplies[2]	1 Set	1 Set	2 Sets	1 Set
3	Bearings	1 Set	2 Sets	2 Sets	1 Set

SYNDUCTION®, SUPER-SEAL® and POXEAL® are Allis-Chalmers trademarks.

1 This column to be used when complete machine is not stocked.

2 This does not apply for motors with Poxeal encapsulated-stator, in which case one complete stator is recommended.

PARTS LIST

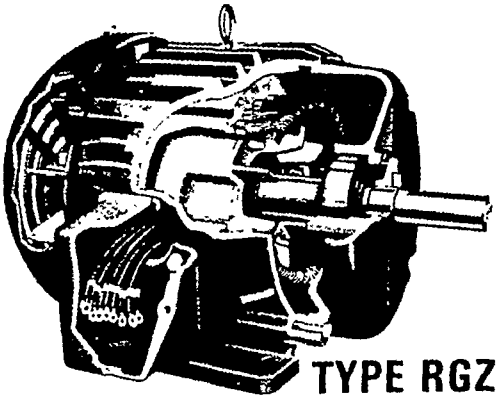

TYPE RGZ

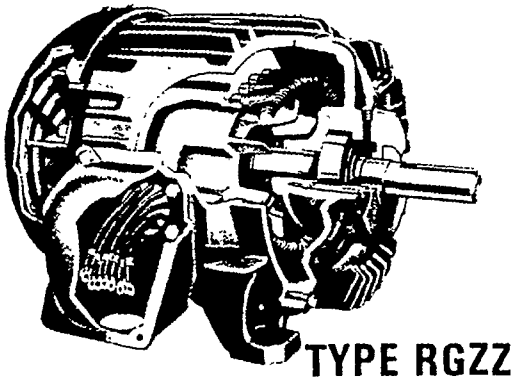

TYPE RGZZ

KEY NO.	CATALOG NO.	PART NAME
1	71000	Stator Assembly
2	70520	Rotor Core
3	70510	Shaft, Rotor
4	70660	Key, Square
5	72014	Cap, End - Rear (Stationary)
6	72320	Deflector, Air*
7	72014	Cap, End - Rear (Rotating)
8	72054	Bearing - Rear
9	72004	Housing, Bearing - Rear
10	72330	Seal, Shaft
11	72220	Bolt, Hex Head (Rear Bearing Housing)
12	72220	Bolt, Hex Head (Rear Bearing Cap)
13	72270	Plug, Pipe
14	72040	Plug, End Cap*
15	72090	Bowl, Fan and Grid
16	72080	Fan
17	72003	Housing, Bearing - Front
18	72053	Bearing - Front
19	72013	Cap, End - Front (Rotating)
20	72013	Cap, End - Front (Stationary)
21	72220	Bolt, Hex Head (Front Air Deflector)*
22	71010	Yoke Stator
23	72210	Eyebolt, Lifting
24	72340	Plate, Rating
25	72220	Pin, Escutcheon
26	72220	Bolt, Hex Head (Air Deflector - Rear)*
27	70930	Gasket (Conduit Box to Yoke)
28	70900	Box Conduit
29	70960	Plug - Conduit Box*
30	72270	Plug, Pipe Conduit Box
31	70910	Cover, Conduit Box
32	72220	Bolt, Hex Head (Conduit Box Cover)
33	72220	Bolt, Hex Head (Conduit Box)
34	72220	Bolt, Hex Head (Front Bearing Housing)
35	72220	Bolt, Hex Head (Front Bearing Cap)
36	72220	Bolt, Hex Head (Fan Bowl)
37	72260	Coupling Pipe
38	72250	Nipple Pipe
39	70930	Gasket, Cond. Box Parting

*Parts Not Required

TYPE RGZ

RGZ 140-180

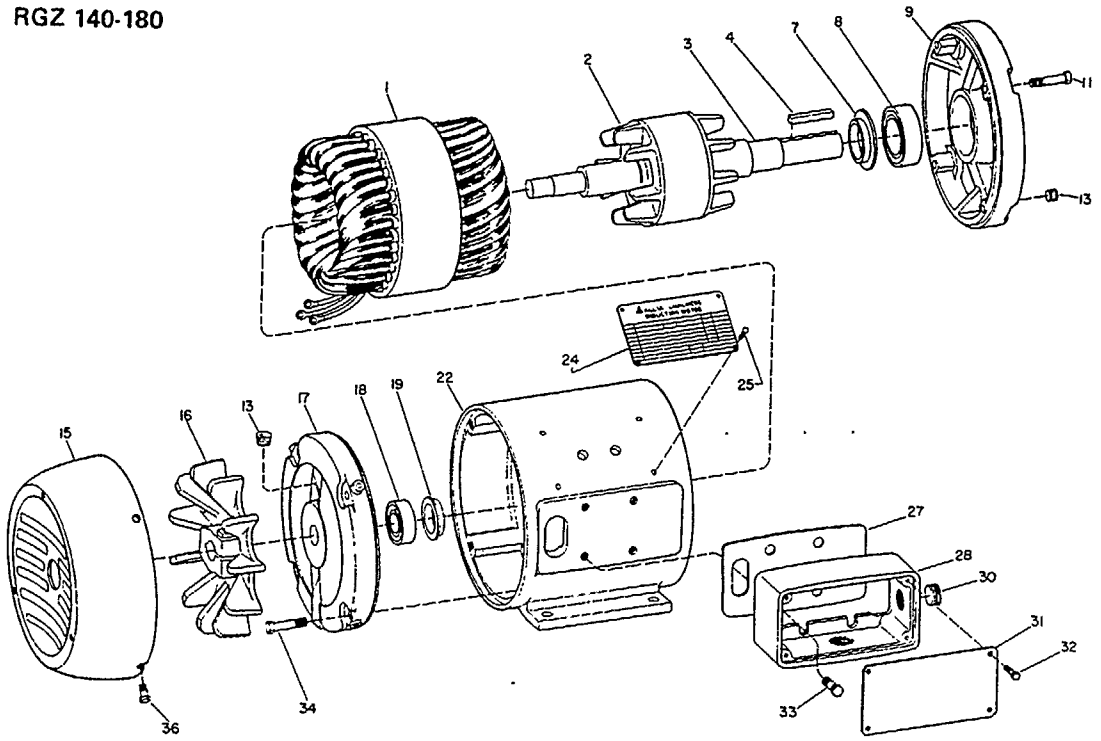

17101

RGZ 210-440

NOTE: Motors above 320 frame have punchings stacked in yoke. Stator Yoke (22) and Stator Assembly (1) are one part.

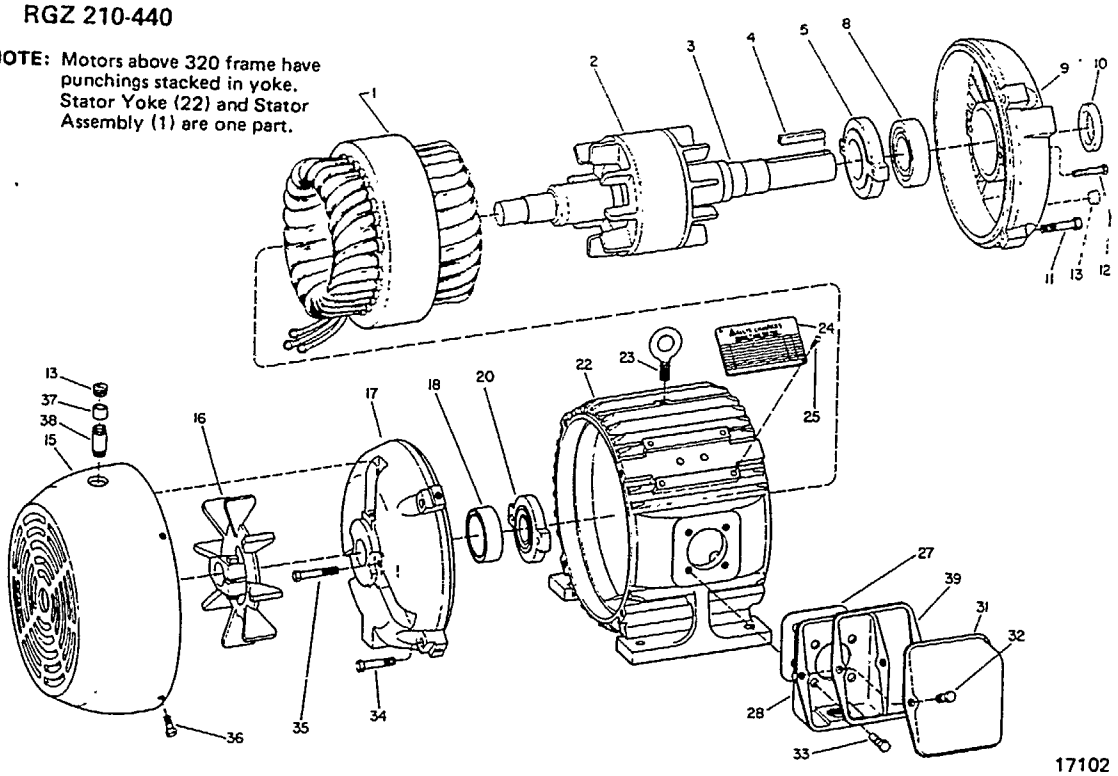

17102

MOTOR SERVICE RECORD

Serial No. _____ Horsepower _____ Type _____

Speed _____ Volts _____ Amperes _____ Phase _____ Cycles _____

Insulation Class _____ Temperature Rise _____ °C Frame Size _____

Connection Diagram - Rotor _____ Stator _____

Owner Order No. _____ Item No. _____ Date Purchased _____

MACHINE TYPE	BEARINGS	SHAFT EXTENSION
☐ Horizontal ☐ Vertical ☐ Moisture-Resistant ☐ Open Drip-Proof ☐ Super-Seal ☐ Totally-Enclosed ☐ Explosion Proof	☐ Ball ☐ Roller ☐ Sleeve Size: Front _____ Rear _____ Lubrication _____	Length _____ Diameter _____ Internal Thread _____ External Thread _____ Keyway _____

Date Installed	Location	Application

Date Repaired or Replaced	Repairs or Parts Replaced (1)	Fault	Repaired by	Total Cost

(1) Name of Part	No. Per Machine	Manufacturer's No.	Date	Quan. Repl.	Cost	Date	Quan. Repl.	Cost	Date	Quan. Repl.	Cost
Rotor											
Stator Coils											
Bearing, Front											
Rear											
Other											
.....											

INSPECTION												
Date Checked												
Bearings												
Lubrication												
Excess Heat												
Excess Noise												
Speed												
Voltage												
Amps												
Insulation												
Clean												
Alignment												
Vibration												
Temperature												

ALLIS-CHALMERS
NORWOOD, OHIO 45212

Litho in U.S.A.

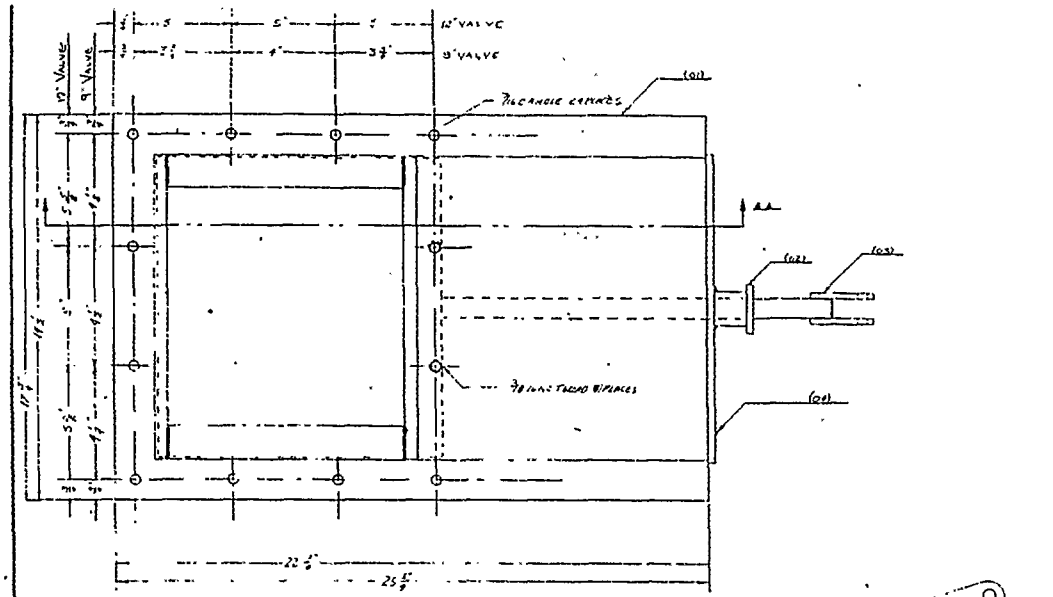

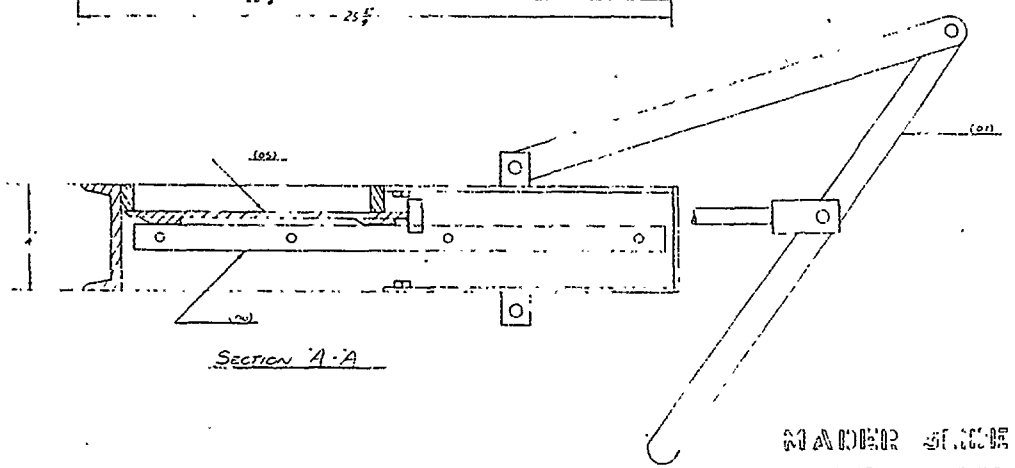

SECTION A-A

BILL OF MATERIAL

ITEM	PIECES	PART NO	DWG NO	DETAIL	DESCRIPTION	WT.
01	1	9"x1"x2'-0"			9" SLIDE GATE BLADE	30#
02	1	9"x6"x12"			12" SLIDE GATE BLADE	32 #
03	1	6"x6"x8"			SPACER PLATE	—
04	1	1"x6"x2'-0"			9" GUIDE	12#
05	1	6"x6"x2'-0"			12" GUIDE	18#
06	2	1"x6"x9"			9" GUIDE ANGLE	7#
07	2	1"x6"x12"			12" GUIDE ANGLE	9#
08	1	9"x6"x8"			9" GUIDE BLOCK	7#
09	1	12"x6"x8"			12" GUIDE BLOCK	9#
10	1	9"x1"x2'-0"			9" GUIDE BAR	7#
11	1	12"x1"x2'-0"			12" GUIDE BAR	9#
12	2	1"x6"x9"			9" GUIDE ANGLE	7#
13	2	1"x6"x12"			12" GUIDE ANGLE	9#
14	1	9"x6"x8"			9" GUIDE BLOCK	7#
15	1	12"x6"x8"			12" GUIDE BLOCK	9#
16	1	9"x1"x2'-0"			9" GUIDE BAR	7#
17	1	12"x1"x2'-0"			12" GUIDE BAR	9#
18	2	1"x6"x9"			9" GUIDE ANGLE	7#
19	2	1"x6"x12"			12" GUIDE ANGLE	9#
20	1	9"x6"x8"			9" GUIDE BLOCK	7#
21	1	12"x6"x8"			12" GUIDE BLOCK	9#
22	1	9"x1"x2'-0"			9" GUIDE BAR	7#
23	1	12"x1"x2'-0"			12" GUIDE BAR	9#
24	2	1"x6"x9"			9" GUIDE ANGLE	7#
25	2	1"x6"x12"			12" GUIDE ANGLE	9#
26	1	9"x6"x8"			9" GUIDE BLOCK	7#
27	1	12"x6"x8"			12" GUIDE BLOCK	9#
28	1	9"x1"x2'-0"			9" GUIDE BAR	7#
29	1	12"x1"x2'-0"			12" GUIDE BAR	9#
30	2	1"x6"x9"			9" GUIDE ANGLE	7#
31	2	1"x6"x12"			12" GUIDE ANGLE	9#
32	1	9"x6"x8"			9" GUIDE BLOCK	7#
33	1	12"x6"x8"			12" GUIDE BLOCK	9#
34	1	9"x1"x2'-0"			9" GUIDE BAR	7#
35	1	12"x1"x2'-0"			12" GUIDE BAR	9#
36	2	1"x6"x9"			9" GUIDE ANGLE	7#
37	2	1"x6"x12"			12" GUIDE ANGLE	9#
38	1	9"x6"x8"			9" GUIDE BLOCK	7#
39	1	12"x6"x8"			12" GUIDE BLOCK	9#
40	1	9"x1"x2'-0"			9" GUIDE BAR	7#
41	1	12"x1"x2'-0"			12" GUIDE BAR	9#
42	2	1"x6"x9"			9" GUIDE ANGLE	7#
43	2	1"x6"x12"			12" GUIDE ANGLE	9#
44	1	9"x6"x8"			9" GUIDE BLOCK	7#
45	1	12"x6"x8"			12" GUIDE BLOCK	9#
46	1	9"x1"x2'-0"			9" GUIDE BAR	7#
47	1	12"x1"x2'-0"			12" GUIDE BAR	9#
48	2	1"x6"x9"			9" GUIDE ANGLE	7#
49	2	1"x6"x12"			12" GUIDE ANGLE	9#
50	1	9"x6"x8"			9" GUIDE BLOCK	7#
51	1	12"x6"x8"			12" GUIDE BLOCK	9#
52	1	9"x1"x2'-0"			9" GUIDE BAR	7#
53	1	12"x1"x2'-0"			12" GUIDE BAR	9#
54	2	1"x6"x9"			9" GUIDE ANGLE	7#
55	2	1"x6"x12"			12" GUIDE ANGLE	9#
56	1	9"x6"x8"			9" GUIDE BLOCK	7#
57	1	12"x6"x8"			12" GUIDE BLOCK	9#
58	1	9"x1"x2'-0"			9" GUIDE BAR	7#
59	1	12"x1"x2'-0"			12" GUIDE BAR	9#
60	2	1"x6"x9"			9" GUIDE ANGLE	7#
61	2	1"x6"x12"			12" GUIDE ANGLE	9#
62	1	9"x6"x8"			9" GUIDE BLOCK	7#
63	1	12"x6"x8"			12" GUIDE BLOCK	9#
64	1	9"x1"x2'-0"			9" GUIDE BAR	7#
65	1	12"x1"x2'-0"			12" GUIDE BAR	9#
66	2	1"x6"x9"			9" GUIDE ANGLE	7#
67	2	1"x6"x12"			12" GUIDE ANGLE	9#
68	1	9"x6"x8"			9" GUIDE BLOCK	7#
69	1	12"x6"x8"			12" GUIDE BLOCK	9#
70	1	9"x1"x2'-0"			9" GUIDE BAR	7#
71	1	12"x1"x2'-0"			12" GUIDE BAR	9#
72	2	1"x6"x9"			9" GUIDE ANGLE	7#
73	2	1"x6"x12"			12" GUIDE ANGLE	9#
74	1	9"x6"x8"			9" GUIDE BLOCK	7#
75	1	12"x6"x8"			12" GUIDE BLOCK	9#
76	1	9"x1"x2'-0"			9" GUIDE BAR	7#
77	1	12"x1"x2'-0"			12" GUIDE BAR	9#
78	2	1"x6"x9"			9" GUIDE ANGLE	7#
79	2	1"x6"x12"			12" GUIDE ANGLE	9#
80	1	9"x6"x8"			9" GUIDE BLOCK	7#
81	1	12"x6"x8"			12" GUIDE BLOCK	9#
82	1	9"x1"x2'-0"			9" GUIDE BAR	7#
83	1	12"x1"x2'-0"			12" GUIDE BAR	9#
84	2	1"x6"x9"			9" GUIDE ANGLE	7#
85	2	1"x6"x12"			12" GUIDE ANGLE	9#
86	1	9"x6"x8"			9" GUIDE BLOCK	7#
87	1	12"x6"x8"			12" GUIDE BLOCK	9#
88	1	9"x1"x2'-0"			9" GUIDE BAR	7#
89	1	12"x1"x2'-0"			12" GUIDE BAR	9#
90	2	1"x6"x9"			9" GUIDE ANGLE	7#
91	2	1"x6"x12"			12" GUIDE ANGLE	9#
92	1	9"x6"x8"			9" GUIDE BLOCK	7#
93	1	12"x6"x8"			12" GUIDE BLOCK	9#
94	1	9"x1"x2'-0"			9" GUIDE BAR	7#
95	1	12"x1"x2'-0"			12" GUIDE BAR	9#
96	2	1"x6"x9"			9" GUIDE ANGLE	7#
97	2	1"x6"x12"			12" GUIDE ANGLE	9#
98	1	9"x6"x8"			9" GUIDE BLOCK	7#
99	1	12"x6"x8"			12" GUIDE BLOCK	9#
100	1	9"x1"x2'-0"			9" GUIDE BAR	7#

WHEELABRATOR FRYE PART NO
640186 - 9" SLIDE GATES
640187 - 12" SLIDE GATES

MADER SLIDE GATE VALVE
SERIES--46GVG AND 46GVA

U.S PAT APPL. FOR

NO	REVISION	DWN	CAD	DATE	NO	REVISION	DWN	CAD	DATE	REFERENCE DWGS	REFERENCE DWGS

CONFIDENTIAL INFORMATION

The work and all information thereon is the property of Wheelabrator Frye Inc. It is considered and proprietary and must not be used made public or copied unless authorized in writing by Wheelabrator Frye Inc. It is transmitted to you with the understanding that it will not be

TOLERANCES ON DIMENSIONS UNLESS OTHERWISE NOTED ARE

DRAWN BY DATE

CHKD BY DATE

APPROV BY DATE

AIR POLLUTION CONTROL SYSTEMS
Wheelabrator-Frye, Inc.
PITTSBURGH PA

STANDARD DWG NO 1200-596

DRAWING NUMBER

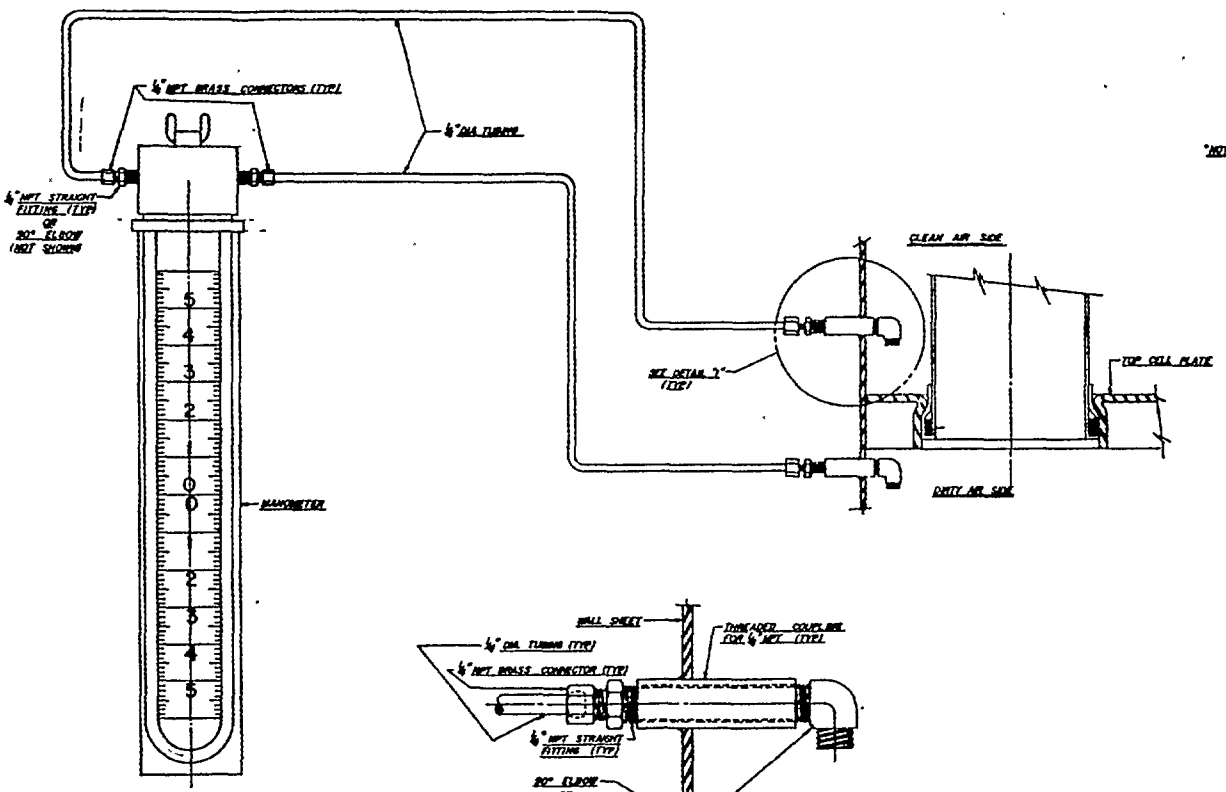

DETAIL "1"
(ENLARGED)

"NOTES"

1) WE RECOMMEND THAT MANOMETERS BE PLACED PLACED IN CONTROL ROOM OR NEAR CELL PLATE COMPT. DOORS, AT EYE LEVEL, WHERE THE OPERATOR OF EQUIPMENT BEING VENTILATED, COULD OCCASIONALLY OBSERVE THE MANOMETER TO DETERMINE WHETHER THE COLLECTOR IS OPERATING SATISFACTORILY OR IF THERE IS A MALFUNCTION OF THE UNIT.

2) IF PLACED IN PLACED IN CONTROL ROOM THE MANOMETERS SHOULD BE PLACED SIDE BY SIDE AND MARKED TO INDICATE THE COMPT. TO WHICH THEY ARE ATTACHED.

3) FACILITIES SHOULD BE PROVIDED FOR PERIODIC DRAINING OF CONDENSATION FROM TUBING IF THIS IS NOT DONE, A BUBBLE IS LIKELY TO FORM IN THE MANOMETER, THUS GIVING INCORRECT READINGS.

4) CLEAN ALL PIPING INTERNALLY AND EXTERNALLY BEFORE ERECTION SO THAT ALL FOREIGN MATERIALS SUCH AS SCALE, SAND, WELD SPLATTER PARTICLES, ETC ARE REMOVED. AFTER ERECTION CLEAN SYSTEM WITH AIR OF SUFFICIENT VELOCITY AND QUANTITY TO REMOVE ALL DEBRIS AND FOREIGN MATTER. ANY LEAKS OBSERVED DURING CLEANING SHALL BE REPAIRED AND SYSTEM SHALL BE RE-CLEANED AS ABOVE.

5) TEST PIPING WITH COMPRESSED AIR. ALL PIPING, REGARDLESS OF CONSTRUCTION, SHALL WITH-STAND WITHOUT FAILURE, LEAKAGE OR PERMANENT DISTORTION AND INTERNAL PNEUMATIC TEST PRESSURE OF 1-½ TIMES THE PRESSURE FOR ABOUT ONE HOUR.

6) DURING ALL TESTS SOAP SUDS SHALL BE APPLIED AT ALL JOINTS OR POINTS WHERE LEAKAGE MIGHT OCCUR.

7) ALL APPARENT DEFECTS IN SYSTEM SHALL BE CORRECTED AND NOTES "5" & "6" REPEATED.

REVISED	BY	CHK	APP'D	NO.	REVISED	BY	CHK	DATE	REFERENCE ORDER	REFERENCE ORDER

CONFIDENTIAL INFORMATION
The data and all information thereon is the property of Wheelabrator-Frye Inc. It is considered and proprietary and must not be used, made public, or copied unless authorized in writing by Wheelabrator-Frye Inc. It is transmitted to you with the implied understanding that it is subject to return upon request.

DRAWN BY: J.A. MISKOVIC, JAMES AND
CHECKED BY:
SCALE: DO NOT SCALE
APPROVAL:

INSTALLATION OF MANOMETERS AND OPTIONAL POP PRE-EMPHASIS PNEUMATIC COLLECTOR

AIR POLLUTION CONTROL SYSTEMS
Wheelabrator-Frye, Inc.
PITTSBURGH, PA.

800-68

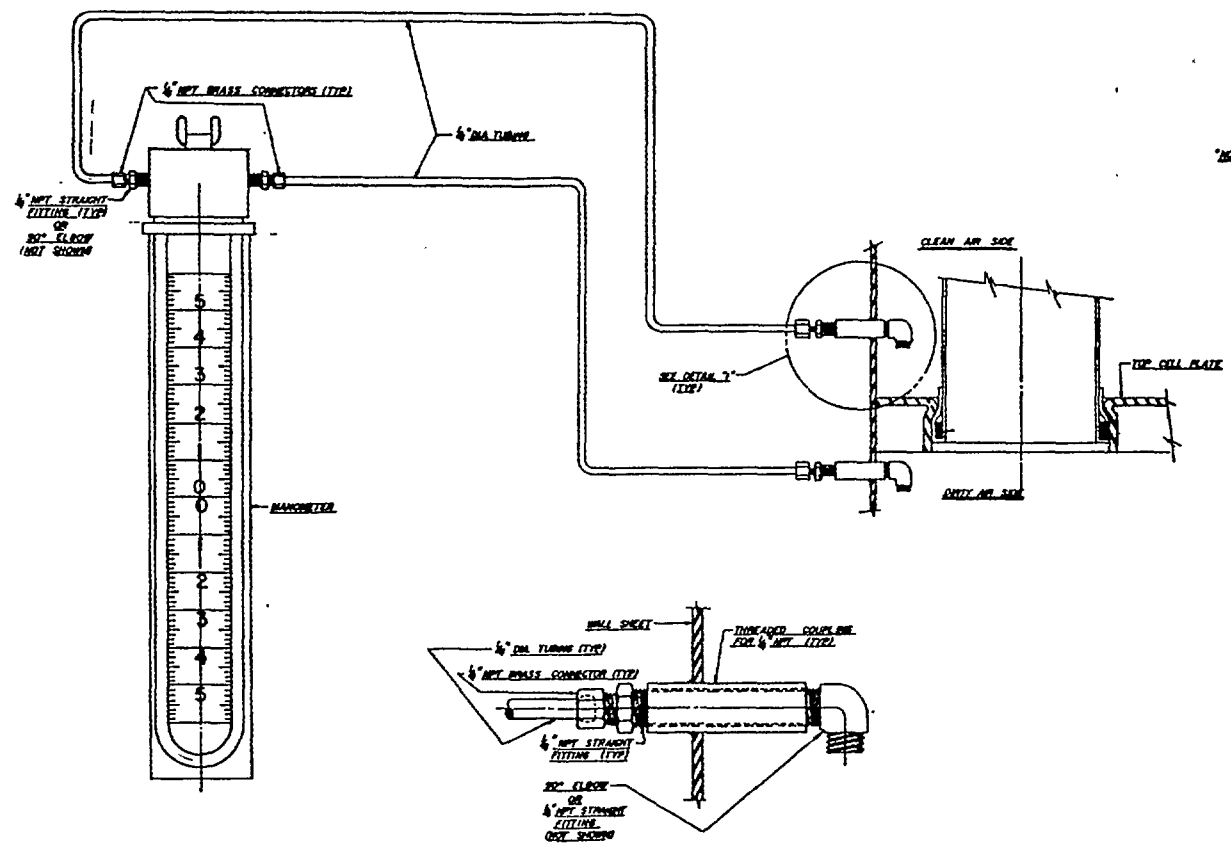

DETAIL "1"
(ENLARGED)

"NOTES"

1) WE RECOMMEND THAT MANOMETERS BE PLACED PLACED IN CONTROL ROOM OR NEAR CELL PLATE COMPT DOORS, AT EYE LEVEL, WHERE THE OPERATOR OF EQUIPMENT BEING VENTILATED COULD OCCASIONALLY OBSERVE THE MANOMETER TO DETERMINE WHETHER THE COLLECTOR IS OPERATING SATISFACTORILY OR IF THERE IS A MALFUNCTION OF THE UNIT.

2) IF PLACED IN PLACED IN CONTROL ROOM THE MANOMETERS SHOULD BE PLACED SIDE BY SIDE AND MARKED TO INDICATE THE COMPT TO WHICH THEY ARE ATTACHED.

3) FACILITIES SHOULD BE PROVIDED FOR PERIODIC DRAINING OF CONDENSATION FROM TUBING. IF THIS IS NOT DONE, A BUBBLE IS LIKELY TO FORM IN THE MANOMETER, THUS GIVING INCORRECT READINGS.

4) CLEAN ALL PIPING INTERNALLY AND EXTERNALLY BEFORE ERECTION SO THAT ALL FOREIGN MATERIALS, SUCH AS SCALE, SAND, WELD SPLATTER PARTICLES, ETC ARE REMOVED. AFTER ERECTION CLEAN SYSTEM WITH AIR OF SUFFICIENT VELOCITY AND QUANTITY TO REMOVE ALL DEBRIS AND FOREIGN MATTER. ANY LEAKS OBSERVED DURING CLEANING SHALL BE REPAIRED AND SYSTEM SHALL BE RE-CLEANED AS ABOVE.

5) TEST PIPING WITH COMPRESSED AIR ALL PIPING, REGARDLESS OF CONSTRUCTION, SHALL WITH-STAND WITHOUT FAILURE, LEAKAGE OR PERMANENT DISTORTION AND INTERNAL PNEUMATIC TEST PRESSURE OF 1-1/2 TIMES THE PRESSURE FOR ABOUT ONE HOUR.

6) DURING ALL TESTS SOAP STUDS SHALL BE APPLIED AT ALL JOINTS OR POINTS WHERE LEAKAGE MIGHT OCCUR.

7) ALL APPARENT DEFECTS IN SYSTEM SHALL BE CORRECTED AND NOTES "5" & "6" REPEATED.

NO.	REVISION	DWN	CKD	DATE	NO.	REVISION	DWN	CKD	DATE	REFERENCE DWGS	REFERENCE DWGS

CONFIDENTIAL INFORMATION

This print and all information thereon is the property of Wheelabrator-Frye Inc. It is confidential and proprietary and must not be used, made public, or copied unless authorized in writing by Wheelabrator-Frye Inc. It is transmitted to you with the explicit understanding that it is subject to return upon request.

DO NOT SCALE

INSTALLATION OF MANOMETERS AND FITTINGS FOR PRE-ENGINEERED SUBTUBE COLLECTOR

AIR POLLUTION CONTROL SYSTEMS
Wheelabrator-Frye, Inc.
PITTSBURGH, PA.

1200-6

MERIAM

Clean-out U-Type Manometer

MERIAM INSTRUMENT
DIVISION THE SCOTT & FETZER COMPANY
10920 MADISON AVENUE · CLEVELAND OHIO 44102 U S A
PHONE (216) 281 1100

FILE NO. 100AA25-215-1
Supercedes 100AA25WM:213-1

MODEL 10AA25

DESCRIPTION

The Meriam 10AA25 manometer is a versatile, economical instrument for the measurement of pressures, vacuums or differential pressures.

The U-tube type manometer is a primary basic standard of pressure measurement. Pressure measurements are accomplished by balancing a vertical head of indicating fluid with the pressure to be measured. As there are no cams, gears or levers to operate in the manometer, the readings obtained are always accurate.

CONSTRUCTION

The manometer has a rigid cast aluminum body frame protecting the glass U-tube on three sides. Mounting holes are provided in the frame for mounting to a wall, column or other suitable structure.

The clean-out head at the top of the instrument seals the indicating tube legs and also provides for the external pressure connections to the manometer. The manometer head fastens to the body by a single nut and is quickly and easily removed when necessary. This exclusive Meriam clean-out head feature permits cleaning and filling of the U-tube without disconnecting the piping to the manometer head. A 1/4" female pipe connection is provided out the left and right sides of the clean-out head as standard. Pressure connections at rear or top of head can be furnished when specified. Manometer clean-out heads of semi-steel, hard rubber, stainless steel or PVC are available for special corrosive applications.

The manometer scale is located between the tube legs and is so formed as to overlap the indicating tubes to provide greatest ease in reading at the meniscus position.

The scale is readily adjustable for zero indicating fluid level. Scale is furnished with satin aluminum background with black graduations and figures.

The simple engineered method of supporting and sealing the U-tube in this manometer permits easy tube replacement in the field.

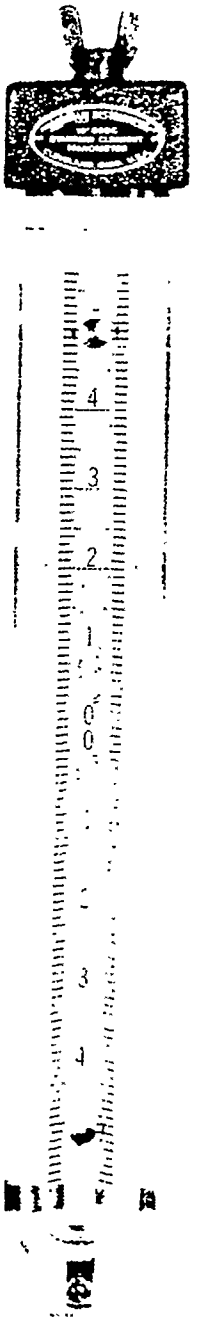

MERIAM
Model 10AA25WM

SPECIFICATIONS:

Model: 10AA25
Type: U-tube
Range: 6, 10, 15, 20, 24, 30, 36, 50 inches
Pressure Rating: 250 PSIG
Mounting: Flush front, wall
Indicating Tube & Packing: Glass, Neoprene
Body Construction: Aluminum

Wetted parts material: Semi-steel, 303 S.S., 316 S.S., rubber, PVC
Scale Finish: Satin aluminum, black graduations
Finish: Aluminum body, black crackle enamel head

Scale Graduations:

A —Linear inches and tenths
B—Inches water pressure using mercury calibrated dry
C —Pounds and tenths using mercury (PSI)
F —Linear centimeters and millimeters
G—Inches and tenths of water pressure using Meriam 827 Red Oil
H—Inches and tenths water pressure using Meriam 175 Blue Fluid
I —Inches and fifths water pressure using Meriam 295 No. 3 Fluid

Accessories:

Return Well Model: 934G50
Electric Contact Rod Model: 990AD
Bubbler Model: 931R or 931S
Line Trap Model: 932R or 932S
Micrometering Valve Model: 941A35
Valve & Piping Manifold: 943F100
Pressure vacuum Variator Model: 971A3
Table Mounting Stand Model: 912A
Slip On Cover Model: 915C
Gooseneck Model: 911D

Net weight

Range inches	6	10	15	20	24	30	36	50
Weight lbs.	2	3	3	4	4	5	5	6

Fluids Available:

Description	Nominal Sp Gr	Description	Nominal Sp Gr
Meriam Instrument Mercury	13.54	Meriam 100 Unity Oil	1.00
Meriam 1000 Green concentrate	1.000	Meriam 295 Red Fluid	2.95
Meriam 827 Red Oil	0.827	Meriam 175 Blue Fluid	1.75

Fluid Requirements:

Range	6	10	15	20	24	30	36	50
Mercury.lbs.	.3	.4	.6	.7	.8	1.0	1.2	1.6
#3 Fluid. lbs.	.1	.1	.2	.2	.2	25	.25	.40
Fl. Oz.	.4	.5	.6	.75	.9	1.0	1.3	1.75

TO ORDER, SPECIFY:

1. Quantity
2. Model & Mounting
3. Range
4. Wetted Parts Material
5. Scale Graduations
6. Indicating Fluid
7. Accessories
8. Spare Parts

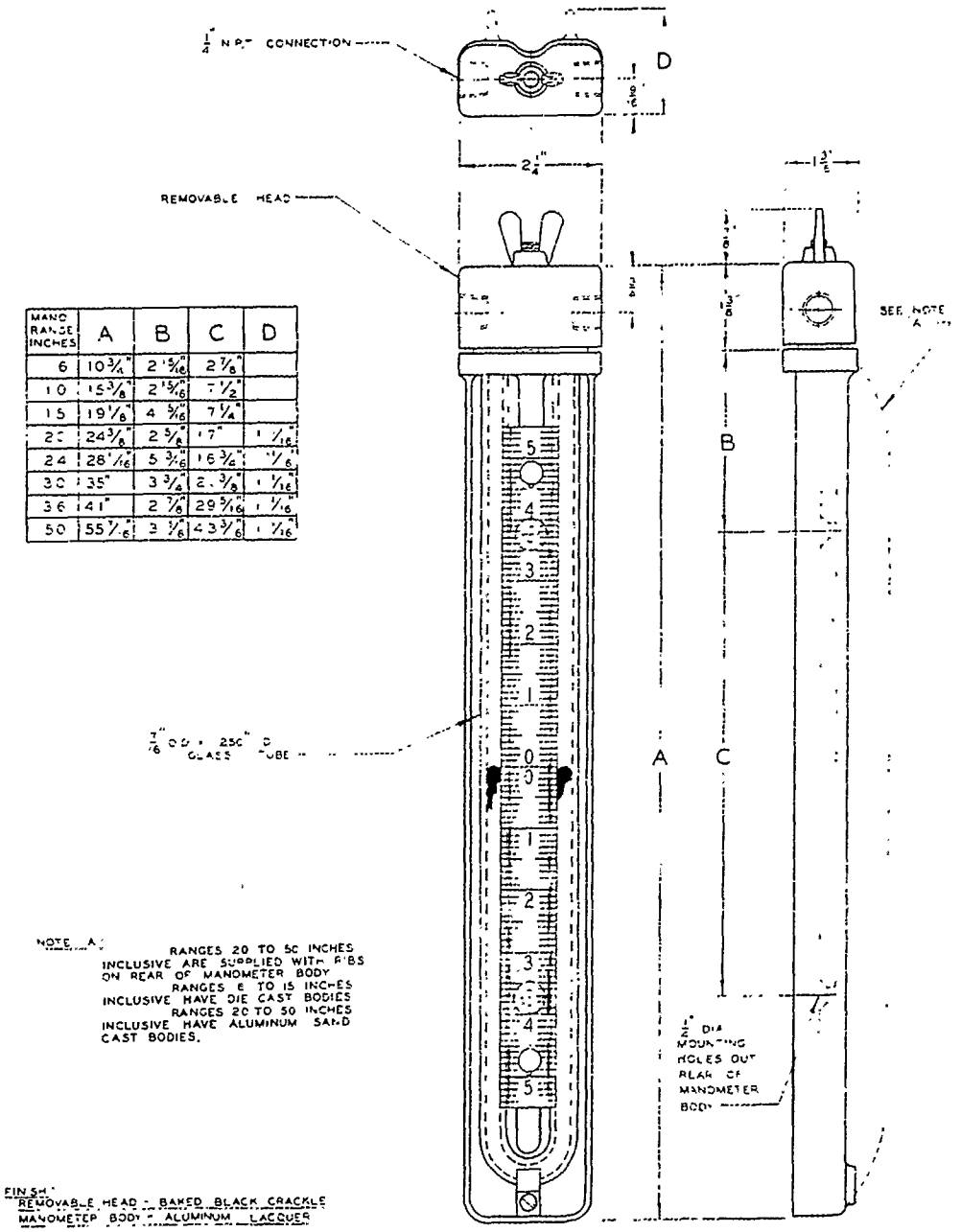

MANO RANGE INCHES	A	B	C	D
6	10 3/4"	2 5/16"	2 7/8"	
10	15 3/8"	2 5/16"	7 1/2"	
15	19 1/8"	4 5/16"	7 1/4"	
20	24 3/8"	2 5/8"	17"	1 1/16"
24	28 1/16"	5 3/16"	16 3/4"	7/16"
30	35"	3 3/4"	2. 3/8"	1 1/16"
36	41"	2 7/8"	29 5/16"	1 1/16"
50	55 7/16"	3 1/16"	43 3/16"	1 1/16"

NOTE A: RANGES 20 TO 50 INCHES INCLUSIVE ARE SUPPLIED WITH RIBS ON REAR OF MANOMETER BODY
RANGES 6 TO 15 INCHES INCLUSIVE HAVE DIE CAST BODIES
RANGES 20 TO 50 INCHES INCLUSIVE HAVE ALUMINUM SAND CAST BODIES.

FINISH:
REMOVABLE HEAD - BAKED BLACK CRACKLE
MANOMETER BODY - ALUMINUM LACQUER

MODEL 10AA25 WM

MERIAM U-TYPE CLEAN-OUT MANOMETER

WALL MOUNTING

60B1588

NOTE: CUSTOMER TO FURNISH MAIN LINE DISCONNECT SWITCH ALL INCOMING LINES ARE TO BE PROPERLY PHASED AS SHOWN.

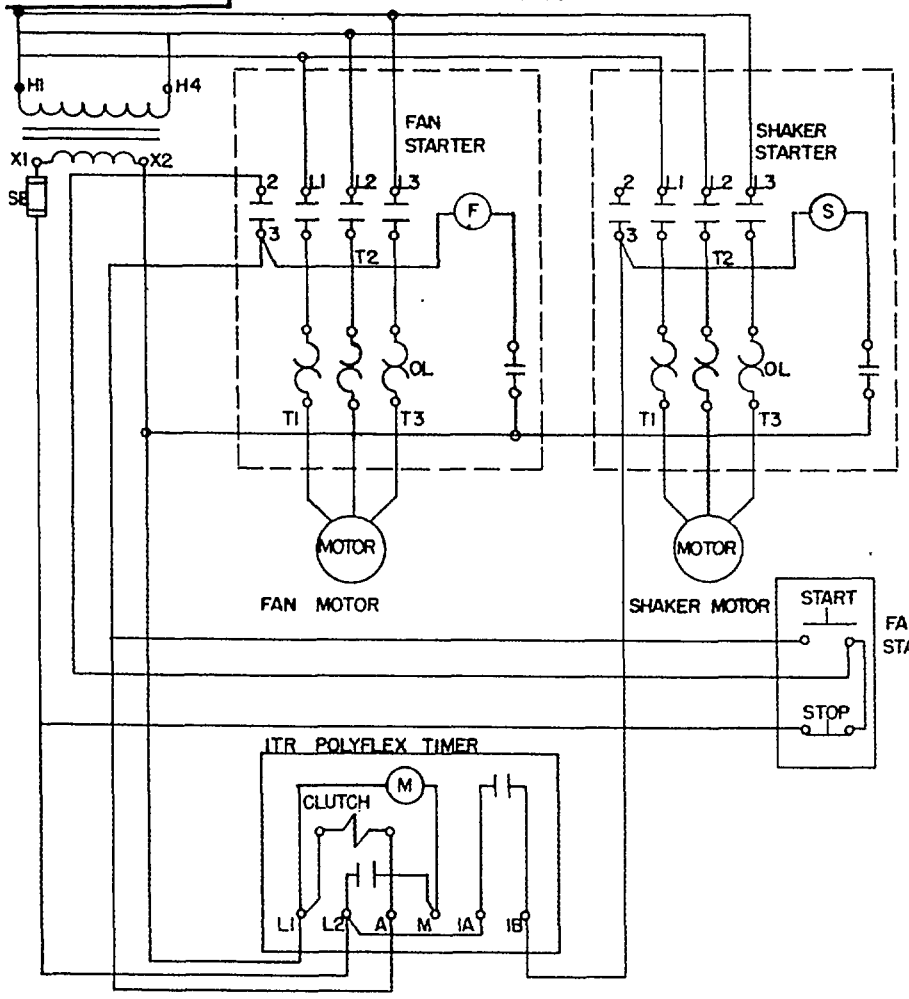

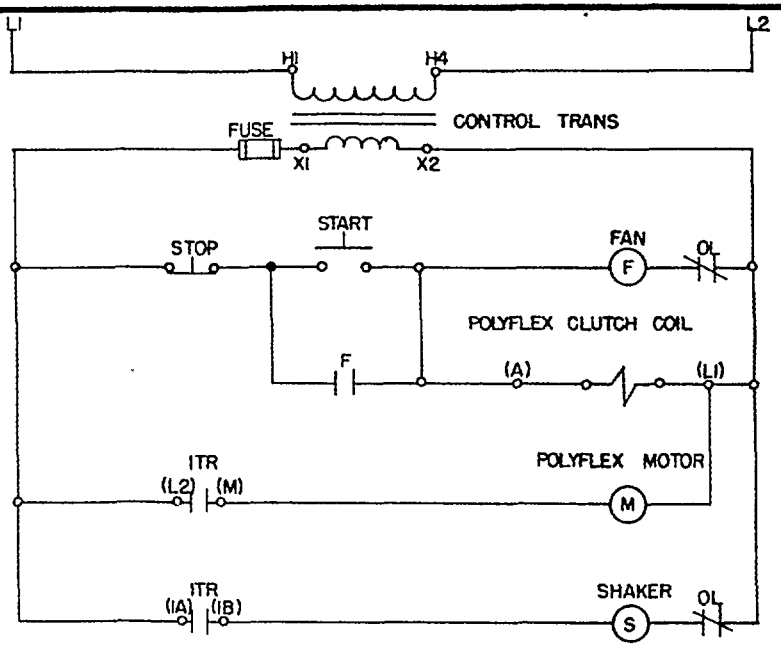

TIMER NOTES:

TIMING STARTS WHEN CLUTCH COIL IS DEENERGIZED (FAN IS STOPPED)
CONTACT 1A-1B CLOSE AT 2 MIN. OPEN AT 5 MIN. TO OPERATE SHAKER
TIMER RESETS WHEN CLUTCH COIL IS ENERGIZED (FAN IS RUNNING)

HIS DRAWING SUPERSEDES
RAWING OF SAME NUMBER
EDRAWN 7-23-75 BY DLW.

REVISION	DWN	CKD	DATE
UPDATED	DLW		7-23-75

CONFIDENTIAL INFORMATION
This print and all information thereon is the property of Wheelabrator-Frye Inc. It is confidential and proprietary and must not be used, made public, or copied unless authorized in writing by Wheelabrator-Frye Inc. It is transmitted to you with the expuct understanding that it is subject to return upon request

DWN BY J.R.D. DATE 6-24-60
CHKD. BY DATE
APPVD. BY DATE
SCALE

WIRING DWG. FOR INTER-MITTENT TIMED SHAKE DUST COLLECTOR WITH SEPARATE 110V. CONTROL CIRCUIT

AIR POLLUTION CONTROL SYSTEMS
Wheelabrator-Frye, Inc.
PITTSBURGH, PA.

DRAWING NO. 60B1588

REV NO 1

CODE	REQ.	PART NO.	DESCRIPTION	MFR.	CODE	REQ.	PART NO.	DESCRIPTION	MFR.	CODE	REQ.	PART NO.	DESCRIPTION

SPECIFICATIONS

1) SOLID STATE (NO MOVING PARTS) TIMING LOGIC.
2) SOLID STATE SWITCH OUTPUT
3) INPUT: 105 TO 135 VAC 50/60 Hz (OTHER INPUT VOLTAGES AVAILABLE ON REQUEST)
   OUTPUT: 1AMP CONT. (10 AMPS SURGE) AT 2V BELOW INPUT VOLTAGE
4) OPERATING TEMPERATURE: -20°F TO +130°F
5) EXPECTED LIFE: 100,000,000 OPERATIONS MIN.
6) TIME RANGES: 2 MINUTES (FIXED) "OFF" TIME ±5%
   3 MINUTES ADJUSTABLE "ON" TIME ±5%
7) TIME REPEATABILITY: ±2%
8) TRANSIENT VOLTAGE PROTECTION: ±1000V FOR 8 MILLISEC.
9) FUSE: 1AMP
10) "POWER ON" AND "LOAD ON" LIGHTS INCLUDED
11) JIC OR NEMA 4 ENCLOSURE
12) WEIGHT: 2½ LBS

OPERATING LOGIC

REMOVING POWER FROM THE FAN INITIATES THE "OFF" CYCLE. AFTER A 2 MINUTE DELAY POWER IS APPLIED TO THE LOAD AND THE "LOAD ON" LIGHT GOES ON. THE OUTPUT TIME (SHAKING TIME) IS ADJUSTABLE FROM A MINIMUM OF ½ MINUTE TO A MAXIMUM OF 3 MINUTES. AT THE END OF THIS PERIOD POWER TO THE LOAD AND TO THE TIMING LIGHT IS INTERRUPTED UNTIL THE FAN IS TURNED "ON" AND "OFF" AGAIN.

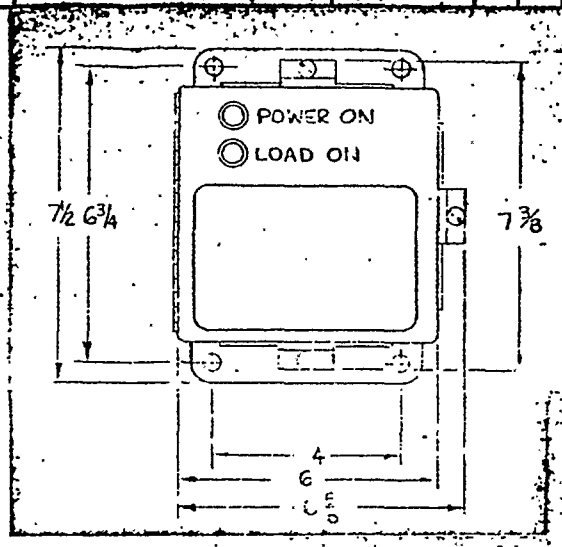

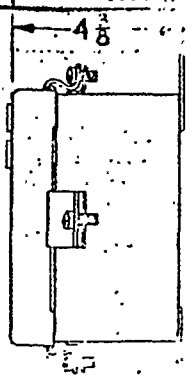

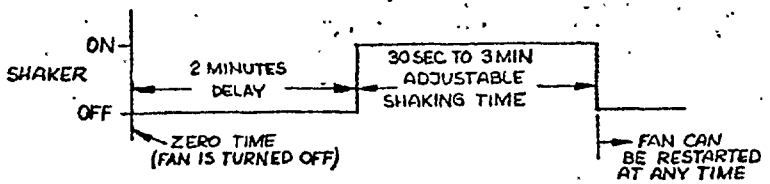

TIME CHART

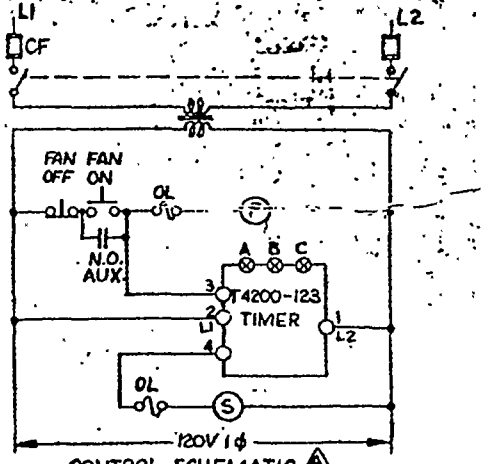

CONTROL SCHEMATIC ⚠

⊗ INDICATES .093 PIN TERMINAL CONNECTION
○ INDICATES CONNECTION TO TERMINAL STRIP

STR	REVISION	DATE	BY	CH.
C	BOX DRAWING AND CONTROL SCHEMATIC UPDATED	9/4/73	JL	
B	OUTLINE REVISED	4/72	KG	
A	CONTROL SCHEMATIC CHANGED	12/72	KG	

RESTRICTED, CONFIDENTIAL DOCUMENT
THIS DRAWING AND ALL INFORMATION SHOWN HEREON ARE THE EXCLUSIVE PROPERTY OF NATIONAL CONTROLS CORP. AND ARE SUBMITTED ONLY AS A CONFIDENTIAL BASIS. THE RECIPIENT AGREES NOT TO REPRODUCE THIS DRAWING, TO RETURN IT UPON REQUEST, AND THAT NO DISCLOSURE OF THE CONTENTS OR THE INFORMATION SHOWN HEREON SHALL BE MADE TO A THIRD PARTY WITHOUT PRIOR WRITTEN CONSENT FROM NATIONAL CONTROLS CORP.

NATIONAL CONTROLS CORPORATION
CHICAGO, ILL. 60638

DR.	DATE	CH.	APP.
KG.	10-5-71	MS.	

SCALE — TOLERANCES NOT SPECIFIED DECIMAL ± .005 FRACTIONAL ± .016 ANGULAR ± 1°

PART NAME	PART NO.	REV.
SINGLE CYCLE TIMER	T4200-123	C

DWG. 000

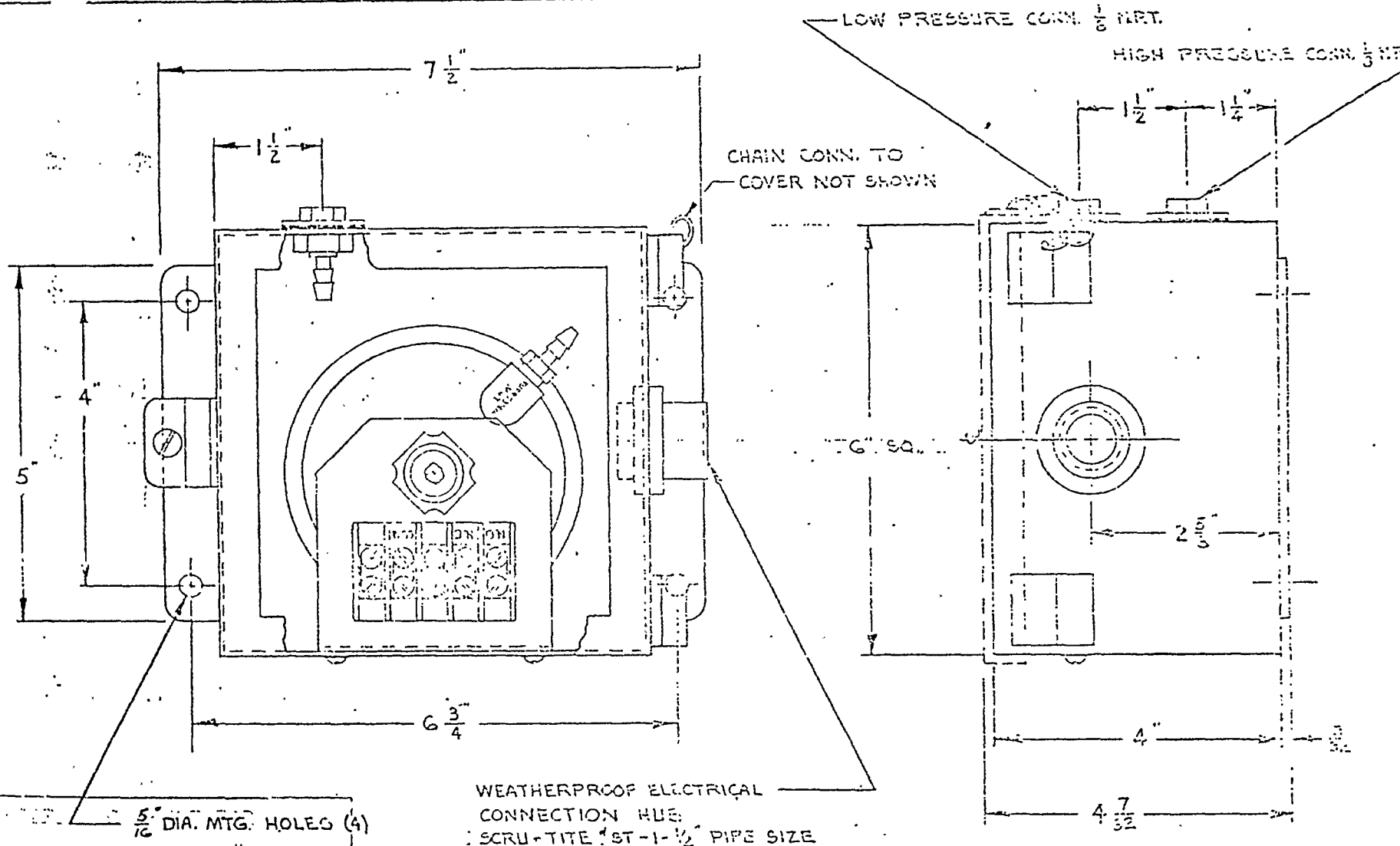

Wheelabrator Frye

06-2412-10

STANDARD TOLERANCES AS FOLLOWS UNLESS OTHERWISE NOT
ALL FRACTIONAL DIMENSIONS ± 1/64
ALL DECIMAL DIMENSIONS ± .005
ALL ANGLES ± 1°

NO.	CHANGES	BY/DATE
1	96879	
	6-16-76 DAH	

DATE 3-15-71
DWN BY R.G.
CHKD
APPD

NAME OUTLINE DIMENSION WEATHERPROOF ENCLOSURE #1820, #1824 DIFFERENTIAL PRESSURE SWITCH

MATERIAL

FINISH

DWYER INSTRUMENTS, INC.
MICHIGAN CITY, INDIANA 46360 U.S.A.

DR NO. 24-700087-00

Dwyer

SERIES 1800* Low Differential Pressure Switches for General Industrial Service

Compact, economically priced switches in 8 standard ranges. Set points from 0.15" to 80" W.C. Repetitive accuracy within 2%. U.L. and C.S.A. listed, F.M. approved.

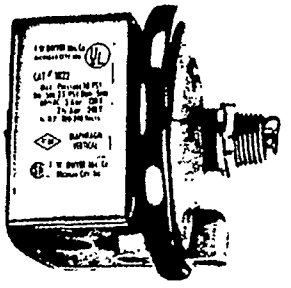

Model 1823 pressure switch. U.L. and C.S.A. listed, F.M. approved.

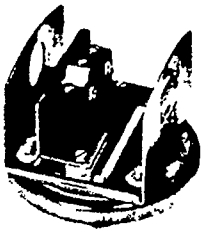

Series 1823 pressure switch. Conduit enclosure removed to show electric switch.

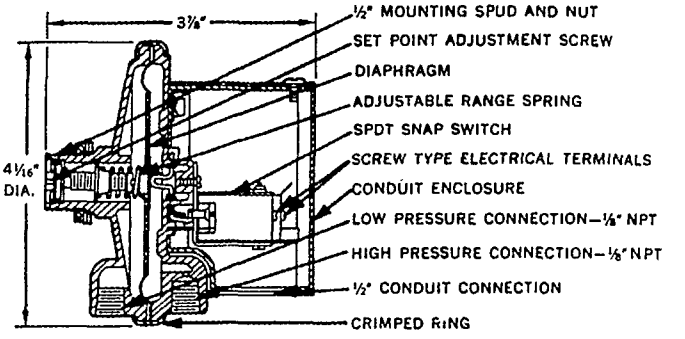

Construction and dimensions. Series 1823 pressure switches.

Still our most popular pressure switches. Combine small size and low price with 2% repeatability for enough accuracy for all but the most demanding applications. Set point adjustment inside the mounting spud permits mounting switch on one side of a wall or panel with adjustment easily accessible on the opposite side.

U.L. and C.S.A. listed, F.M. approved.

***Model 1823 shown; (1823 replaces 1820, 1821 and 1822 which are similar).**

Environmental (MIL) Switch

Unlisted Model 1820 can be furnished with special snap switch sealed against the environment for temperatures down to −65° F., high humidity and/or for government applications. Similar to standard Model 1823 except dead band is slightly greater. Specify Model 1820 (Range No.) "MIL" in ordering.

Weatherproof Enclosure

16 ga. steel enclosure for unusually wet or oily conditions. Withstands 200 hour salt spray test. Gasketed cover. Weight 5½ lbs. Switch must be installed at factory. Specify "WP" in addition to switch catalog number.

Explosion-Proof Housing

Cast iron base and aluminum dome cover. Approximate weight 7½ lbs. Specify "EXPL" in addition to switch catalog number.

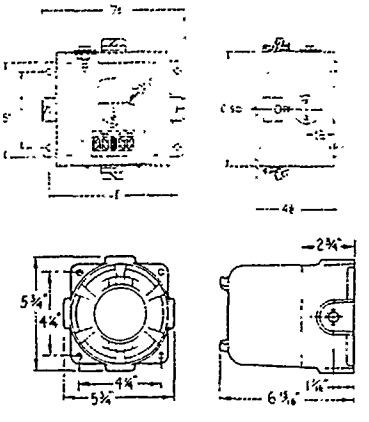

How to Order: See price list, Bulletin S-26.

PHYSICAL DATA

Temperature limits: 32° F. (−30° for dry air, −65° with "MIL" option) to 110° F. (130° with reduced electrical rating).

Rated pressure: 10 psig one or both sides of diaphragm.

Pressure connections: ⅛" NPT.

Electrical rating: 15 amps, 120-480 volts, 60 Hz. A.C. Resistive ⅛ H.P. @ 125 volts, ¼ H.P. @ 250 volts, 60 Hz. A.C.

Wiring connections: 3 screw type, common, normally open and normally closed.

Set point adjustment: Screw type inside mounting spud.

Housing: Aluminum die casting. Steel fittings zinc plated, dichromate dipped for 200 hour salt spray test.

Diaphragm: Silicone rubber on dacron with aluminum support plate.

Calibration spring: Stainless steel.

Mounting spud: ½" pipe thread.

Weight: 1 lb., 5 oz.

SERIES 1823 SWITCHES: OPERATING RANGES AND DEAD BANDS. U.L. and C.S.A. Listed, F.M. Approved.

Model Number	Operating Range Inches, W.C.	Approximate Dead Band	
		At Min. Set Point	At Max. Set Point
1823-0	0.15 to 0.5	0.06	0.06
1823-1	0.3 to 1.0	0.08	0.08
1823-2	0.5 to 2.0	0.10	0.12
1823-5	1.5 to 5.0	0.14	0.28
1823-10	2.0 to 10	0.18	0.45
1823-20	3 to 22	0.35	0.70
1823-40	5 to 44	0.56	1 1
1823-80	9 to 85	1.3	3.0

Suggested Specification

Differential pressure switches shall be diaphragm operated with 4" diaphragm to actuate a single pole double throw snap switch. Motion of the diaphragm shall be restrained by a calibrated spring that can be adjusted to set the exact pressure differential at which the electrical switch will be actuated. Motion of the diaphragm shall be transmitted to the switch button by means of a direct mechanical linkage. Switches shall be Dwyer Instruments, Inc. Catalog No. 1823-_____ for the required operating ranges.

*Patent No. 3.007.017