INDUSTRIAL HYGIENE REPORT

GULF COAST INDUSTRIAL HYGIENE CENTER
Louisiana Division

AN OPERATING UNIT OF THE DOW CHEMICAL COMPANY

IHS File Number: LAD-LHC3-96.01	
Date Issued: 6/3/96	
Plant Code: 0681	

Title	**Annual Summary of Monitoring Results for Benzene, 1,3-Butadiene, Toluene, Xylene, Biphenyl and Noise and Related Industrial Hygiene Activities During 1995 at the Light Hydrocarbon III Facility, Plaquemine, Louisiana.**
Authors	D. D'Armond J. Paul
Reviewer	D. Albert B. Jackson
Purpose	Monitoring was conducted to confirm Benzene compliance and assess 1,3-butadiene on the Furnace I job assignment. Benzene compliance was also assessed on the analyzer job assignment. Additionally, Benzene monitoring was performed to assess any potential changes in exposure potential after the benzene expansion job. Other chemicals monitored in the benzene expansion area were toluene, xylene, biphenyl and 1,3-butadiene. Loading operations were monitored to assess ambient levels of biphenyl.
Results and Conclusions	The following conclusions are based on conditions that existed the days of the survey. Changes in equipment, procedures, ventilation or other conditions that affect exposures may alter or invalidate these conclusions.
Benzene, 1,3-Butadiene	The analyzer job was monitored again to confirm the data results collected last year in accordance with the benzene standard. The job task had been monitored following an engineering improvement to mount the filters outside the analyzer houses. The benzene results were <0.01 and 0.04 ppm 8-hr. time weighted average. The Furnace I job was re-checked for benzene compliance. Two samples were collected a week apart with results of <0.03 and <0.04 respectively. 1,3-Butadiene levels were also assessed at the same time with both results being <0.02 ppm. These results are to be compared to the 8-hour time weighted average limit of 1.0 ppm for benzene and 2..0 ppm for 1,3-butadiene.
Hydrocarbon Monitoring Following Benzene Expansion Project	Several full-shift operations were monitored following the benzene expansion last year. Two samples were taken during the performance of the operations associated with the benzene, toluene, xylene rounds and two samples were collected during the routine extraction/hydrogenation operations. All levels were well below the established 8-hour time weighted guidelines. Benzene results were both <0.01 ppm for BTX rounds and 0.03 and 0.04 ppm for the extraction/hydrogenation job. Toluene levels were both <0.01 ppm for BTX rounds and 0.01 and 0.03 ppm for the extraction/hydrogenation job. Xylene levels were none detected and <0.01 ppm for the BTX rounds and both results were <0.01 for the extraction/hydrogenation job. 1,3-Butadiene levels were none detected and <0.03 ppm for both jobs monitored and Biphenyl results were all none detected. A 3M Easi-Care half-face respirator equipped with OVAG cartridges was worn during sample collection for the extraction/hydrogenation job. All of these results are to be compared to the 8-hour time weighted average limit of 1.0 ppm for Benzene, 50 ppm for Toluene, 100 ppm for Xylene, 2 ppm for 1,3-butadiene and 0.2 ppm for Biphenyl..

Continued on Next Page

Biphenyl	Monitoring was performed for biphenyl during loading operations. One sample was collected during the loading of a biphenyl tank car and two samples were collected during the loading of biphenyl and pygas tank cars. The sample results ranged from none detected (0.01 ppm) to 0.04 ppm and are to be compared to the 8-hour time weighted average limit of 0.2 ppm. Individual results were ND(0.01), <0.01, 0.04 and <0.01 ppm. A 3M-5000 Easi-Care half-face respirator equipped with OVAG cartridges was worn during the loading of the biphenyl and pygas tank cars.
Noise	An area noise survey was conducted and there remains two areas of the plant requiring double hearing protection, the K-71 compressor and gas turbine area and the K-120 compressor and gas turbine area. Further monitoring is scheduled over the next two years to confirm noise levels for the job assignments above the 50% dose level.
Hood Evaluation	The last hoods evaluated for face velocity performance were done in the fourth quarter of 1995 and judged to be performing adequately.
Training	All training was conducted utilizing the IPT (in plant training) computer based plant modules. Training on the hazards within the Light Hydrocarbon III facility was presented during Hazard Communication training which included training on the benzene regulation. A written Hazcom program manual exists in the facility along with all material safety data sheets for the hazards in the blocks. Respiratory protection training was conducted on the respirators specified for use in the Light Hydrocarbon III Facility. Annual respirator fit-testing was conducted on all applicable personnel in accordance with the benzene regulation using the benzene protocol and the saccharin aerosol method. Training on the hearing conservation program was presented and included the effects of excessive noise to the ear. Personnel received instruction in the proper use of hearing protection. Training was presented on the personal protection equipment used in Light Hydrocarbon III Facility. Asbestos training consisted of the hazards associated with asbestos and a review of the handling guide.
Program Updates	The Chemical and Physical Agent Inventory was updated. The written hearing, respiratory, personal protective equipment, asbestos management and Hazcom programs were reviewed for currency.
Recommendations	Perform monitoring as indicated in the Light Hydrocarbon III Written Ind. Hygiene Monitoring Program. It is anticipated that the 1,3-butadiene standard will become final in 1996 and initiate the required initial monitoring to assess compliance.
Sampling Analytical Methods	The sampling for all compounds monitored was collected using a 3M 3500 passive badge. The badges were desorbed in carbon disulfide and analyzed by gas chromatography using a FID. The analyses were performed by the LAD Environmental Services Lab and reported under reference numbers 500786, 500844, 500911, 500909, 500784, 500788, 500783 and 500787.

Continued on Next Page

Distribution List

K. Hasenbeck, 2306

B. Jackson, 6801
T. Leigh, 1601
E. Supple, 3801
L. Hanrahan, 3801
Occupational Health Department (R. McLaury,MD), 2303
Plant Technology Center
D. L. Albert, 3502W
S. L. Dombrowski, 1803 Midland
Asbestos Compliance File, Legal Department, 2306
Lead Compliance File, Industrial Hygiene, 3502W
Texas Operations Industrial Hygiene, B-101
Louisiana Compliance File (Original for BackUp Package),

GULF COAST

INDUSTRIAL HYGIENE REPORT

FILE NUMBER:	LAD-LHC III 94.01
DATE ISSUED:	8/5/94
PLANT CODE:	0681

Title: Evaluation of employees exposure to asbestos, benzene, toluene, 1,3 butadiene, ethyl benzene, xylene, dicyclopentadiene, refractory ceramic fibers, crystalline silica, noise and related Industrial Hygiene activities at the Louisiana Division Light Hydrocarbon 3 Plant, Plaquemine, Louisiana during 1993.

Authors: D. D'Armond, J. Paul

Reviewers: B. Jackson, C. Modtland, M. Marchant

Purpose

As part of a continuous effort to provide a healthful and safe work environment for personnel of the LHC 3 plant, a program to evaluate employees' potential exposure to asbestos, hydrocarbons, crystalline silica, noise and refractory ceramic fibers was conducted during 1993. This report addresses the work performed including recommendations for 1994.

Results and Conclusions

The following conclusions are based on conditions that existed the days of the surveys. Changes in equipment, procedures, ventilation or other conditions that affect exposures may alter or invalidate these conclusions.

Hydrocarbons

Personal and area badge monitoring was conducted on operations personnel for exposure to benzene, 1,3-butadiene, toluene, xylene, ethyl benzene and dicyclopentadiene. Monitoring was conducted for both time weighted average and short term tasks. Time weighted average monitoring for routine operations were well within the limits for all hydrocarbons monitored. Monitoring during maintenance on furnace #3 were within the guidelines for benzene and 1,3-butadiene. Benzene levels for the contract laborer averaged 37 ppm during the cleaning of rust and debris from benzene tank T-1605B floor. Personnel involved in the job wore breathing airline respirators during the job. An instrument operator was monitored for benzene exposure during the filter replacement job inside the analyzer houses. The result was 9.6 ppm and represents a potential exposure because a full-face organic vapor respirator was worn during the task. These filters have been moved to the outside of the analyzer houses and the task will be remonitored when it is performed again. Several short term task samples were collected and analyzed for hydrocarbons during sampling collection and vessel inspection. All results were well within the short term exposure guidelines. Area samples collected during short term and time weighted average sampling were also well within established guidelines. This data is shown in Table 1 and Table 2.

Distribution

K. Hasenbeck, B-2306
D. Mihalik, B-6801
C. Modtland, B-6801
D. Albert, B-3502W
J. Masey, B-3801
D Wesson, B-3801
B. Jackson, B-6801
S. L. Dombrowski, Midland 1803
C. Messelt, B-3502W
E. Supple, B-3801

Results and Conclusions (Cont'd)	
Asbestos	Employee exposures to asbestos were monitored during wet removal of friable asbestos gaskets and are detailed in Table 3. Analytical results were at the limit of detection of <0.01 fib/cc. The 30 minute short term exposure limit is 1 fib/cc > 5 microns. These results represent potential exposure rather than actual exposure because the proper respiratory protection was worn. This consisted of the North 7700 half-face respirator with HEPA filters.
Refractory Ceramic Fibers	Employee exposures to Refractory Ceramic Fibers (RCF) were monitored during brick repair work and Kaowool work inside a furnace. Analytical results were 0.22 fib/cc and 0.42 fib/cc. The proposed Dow IHG permissible exposure limit for RCF is 0.5 fib/cc > 5 microns. These results represent potential exposure rather than actual exposure because the proper respiratory protection was worn. This consisted of a half-face 3M 6000 respirator equipped with HEPA filters. Table 4 details this information.
Crystalline Silica	During the above job, levels of crystalline silica were also monitored with results of 0.5 mg/m3 respirable dust, none detected (0.03 mg/m3) crystalline quartz, none detected (0.05 mg/m3) cristobalite and none detected (0.1 mg/m3) tridymite. These results are to be compared to the permissible limits of 5.0 mg/m3 respirable dust, 0.1 mg/m3 crystalline quartz, 0.05 mg/m3 cristobalite, and 0.05 mg/m3 tridymite. Again, half-face respiratory protection was worn using HEPA filters. Future sampling needs to be conducted for a longer time period in order to assure tridymite levels are below the TLV. This information is noted in Table 5.
Noise	One contractor was monitored for noise during routine operations at Block 110 with a full shift dose corrected result of 1.2% to be compared to the OSHA permissible exposure limit of 100%. This information is detailed in Table 6.
Hood Evaluation	All laboratory fume hoods and the maintenance shop hood were evaluated for face velocity. Smoke tubes and an Alnor Model 8925 Thermo Anemometer air velocity meter were used to determine capture performance and hood face velocities. Documentation for the performance of the air flow monitor device is done once per week.
Fugitive Emission Program	The LHC 3 plant has an ongoing fugitive emission monitoring program for hydrocarbons which includes corrective actions for repairing any leaks detected. This preventive program aids in eliminating potential employee exposures.

Results and Conclusions (Cont'd)

Training

Training on the hazards within the LHC 3 plant was presented during Hazard Communication training. A written Hazcom program manual exists in the plant along with all material safety data sheets for the hazards in the block. This training was conducted utilizing the IPT(in plant training) computer based plant modules.

Respiratory protection training was conducted on the respiratory protection available in the LHC 3 plant. The training included proper use, limitations and donning procedures. This training was conducted utilizing the IPT computer based plant modules. Annual fit-testing was conducted for all applicable personnel in accordance with the benzene regulation using the benzene protocol and the saccharin aerosol method.

Training on the hearing conservation program was presented and included the effects of excessive noise to the ear. Personnel received instruction in the proper use of hearing protection. Again, this training was given utilizing the IPT computer based plant modules.

Program Updates

The chemical list and equipment/vessel cross reference found in the Hazcom Manual and the Chemical and Physical Agent Inventory were updated.

The written hearing, respiratory, asbestos management and Hazcom programs were reviewed for currency

The personal protective equipment written program was completed and served as a current survey of the chemical resistant PPE being used in the plant. Required PPE has been previously detailed in the safety section of job procedures and/or referenced on the Safe Work Permit.

Recommendations

- Continue to monitor non-routine task specific jobs for hydrocarbon exposures to assure regulatory compliance.

- Maintain currency of industrial hygiene programs (Hazcom, Respirator, Hearing, Benzene, PPE, Asbestos) and provide annual training on Hazcom, hearing conservation, benzene regulation and respiratory protection.

- Update the Chemical and Physical Agent Inventory

Sampling and Analytical Methods

ASBESTOS

Employee breathing zone sampling for asbestos was taken using Gilian high flow pumps calibrated at a flow rate between 2430 cc/min. and 2475 cc/min. An open face Neuclepore 0.8 micron size 25 mm mixed cellulose filter was used. Analyses were performed by an outside laboratory, Inchcape Testing/West-Paine Laboratories of Baton Rouge, La. using NIOSH 7400 method.

BENZENE, 1,3 BUTADIENE, TOLUENE, DICYCLOPENTADIENE, XYLENE, and ETHYL BENZENE

Samples to measure concentrations of benzene, 1,3 butadiene, toluene, dicyclopentadiene, xylene, and ethyl benzene were collected using 3M 3500 or 3520 organic passive badges. Analyses were performed by L. Almo of the LAD Environmental Services Lab using gas chromatography.

REFRACTORY CERAMIC FIBERS

The sampling for RCFs was conducted using NIOSH method 7400A. Fibers larger than 5 microns in length were counted by means of phase-contrast microscopy at a magnification of 400X. Employee breathing zone sampling was taken using Gilian low flow sample pumps calibrated at a flow rate between 1.77 liters/min. and 2.6 liters/min. using a 25 mm filter cassette. Analyses were performed by outside laboratory, Inchcape Testing/West-Paine Laboratories of Baton Rouge, La.

CRYSTALLINE SILICA

Samples for crystalline silica were collected on 35mm PVC filter cassettes at a flow rate of 1.7 liters/minute and analyzed in accordance with NIOSH Method 7500. Analyses were performed by an outside laboratory, Clayton Environmental Consultants, Michigan.

TABLE 1

PERSONAL AND AREA MONITORING TIME WEIGHTED AVERAGE RESULTS FOR 1,3-BUTADIENE, BENZENE, TOLUENE, XYLENE, AND DICYCLOPENTADIENE, AT THE LIGHT HYDROCARBON III PLANT, LOUISIANA DIVISION, PLAQUEMINE, LOUISIANA, 1993

			CONCENTRATION (PPM)					
Master #	Date	Sample Dur. (Min.)	1,3-Butadiene	Benzene	Toluene	Xylene	Dicyclopentadiene	Task
OPERATION SPECIALIST - 12 HR SHIFT								
099777	04/01	505	ND(0.28) (a)	<0.05 (b)		<0.05	ND(0.05)	outside extraction job
097375	04/01	585	ND(0.24)	<0.04		<0.04	<0.05	outside BTX opr ; caught samples (c)
242593	04/03	600	ND(0.24)	0.06				outside furnace #2;worked around fuel gas
242593	04/02	575	ND(0.25)	<0.04				outside furnace #2; caught samples
095449	04/01	580	ND(0.24)	<0.04				outside furnace #2; caught samples
098120	04/21	510	ND(0.06)	<0.05	0.12	<0.05	<0.05	outside extraction job,blew down transmitter, cleared pump (c)
433252	04/21	495	<0.06	<0.05	<0.05	<0.05	ND(0.05)	Block 58 O.S. job
433028	07/29	480	<0.05	<0.05				Furnace 1 job - normal routine
433820	08/02	420	<0.05	<0.05				Furnace 1 job - normal routine
433820	08/03	420	<0.05	<0.05				Furnace 1 job - normal routine
433343	10/22	450	<0.30	<0.05				Normal Blk 110 Duties
433343	10/21	720	<0.19	<0.03				Normal Blk 110 Duties
	ARITHMETIC AVG.		<0.17	<0.05	0.09	<0.05	<0.05	
SR. OPERATION SPECIALIST - 12 HR SHIFT								
433672	04/06	310	2.0	9.6	0.82	0.11	3.6	analyzer opr replacing filters at analyzer houses (d)
CONTRACT-LABORER; 8 HR SHIFT								
437-23-9405	09/23	435		31				Cleaned Benzene T-1605B floor of rust and dirt (e)
428-62-5287	09/23	510		28				Cleaned Benzene T-1605B floor of rust and dirt (e)
435-63-6223	09/23	260		53				Cleaned Benzene T-1605B floor of rust and dirt (e)
435-48-7375	09/23	260		36				Cleaned Benzene T-1605B floor of rust and dirt (e)
431-23-0772	11/18	305	0.14					Taking core bore under T-1701 Bz Tank (e)
434-98-5944	11/18	305	0.23					Taking core bore under T-1701 Bz Tank (e)
	ARITHMETIC AVG.		0.19	37				
AREA SAMPLE								
	05/11	450	<0.30	<0.05	<0.05	<0.05	<0.06	outside lab refrig. after new carbon absorbers were installed
	09/23	465		0.19				NW manway of T-1605B
	11/18	335	0.15					T-1701 Core Boring work; 5' from work area
	ARITHMETIC AVG.		0.23	0.12	<0.05	<0.05	<0.06	
Occupational Exposure Limit								
ACGIH 8-HR TWA			10		50	100	5	
OSHA 8-HR TWA				1				

(a) ND=None Detected with the analytical limit of quantitation noted in parenthesis
(b) BLQ=Detectable amount but below the analytical limit of quantitation for the survey sampling conditions
(c) 3M Easi-Care half-face respirator with OVAG cartridges was worn during the job
(d) Scott-O-Vista full-face respirator with OVAG cartridges was worn during the job.
(e) Full-Face Breathing-airline was worn during the job

TABLE 2

PERSONAL AND AREA MONITORING RESULTS DURING SHORT TERM TASK SPECIFIC OPERATIONS FOR 1,3-BUTADIENE, BENZENE, TOLUENE, XYLENE, DICYCLOPENTADIENE, AND ETHYL BENZENE, AT THE LIGHT HYDROCARBON III PLANT, LOUISIANA DIVISION, PLAQUEMINE, LOUISIANA, 1993

			CONCENTRATION (PPM)						
Master #	Date	Sample Dur. (Min.)	1,3-Butadiene	Benzene	Toluene	Xylene	Dicyclopentadiene	Ethyl Benzene	Task
OPERATION SPECIALIST - 12 HR SHIFT									
099777	04/01	75	ND(1.9) (a)	<0.31 (b)		<0.31	ND(0.37)		outside extraction job; caught samples (c)
099055	04/01	60	ND(2.4)	<0.38		<0.39	ND(0.46)		outside extraction;catching samples (c)
433576	04/01	110	<1.3	<0.21		<0.21	<0.25		outside BTX opr; catching samples (c)
098575	07/29	20	<1.1	<1.15					Furnace II job - caught quench oil, pyrolysis gas, H20 smp
ARITHMETIC AVG.			<1.7	<0.51		<0.30	<0.36		
SR. OPERATION SPECIALIST - 12 HR SHIFT									
220015	08/05	40	<0.19	<0.62					Furnace II job - caught quench oil and water samples
PRODUCTION SPECIALIST - 8 HR SHIFT									
090731	11/12	20		1.2	7.5			<1.1	Inspected V-300A; Blk 110 (c)
CONTRACT-BOILERMAKER; 8 HR SHIFT									
433-11-2651	05/10	220	<0.62	<0.10					performed normal maint. on transfer line exchger's on F-3 (c)
436-27-1788	05/10	220	<0.62	<0.10					performed normal maint. on transfer line exchger's on F-3 (c)
433-02-8744	05/10	400	<0.34	<0.06					performed normal maint. on transfer line exchger's on F-3 (c)
437-74-2303	05/10	220	<0.62	<0.10					performed normal maint. on transfer line exchger's on F-3 (c)
437-76-3537	05/10	220	<0.62	<0.10					performed normal maint. on transfer line exchger's on F-3 (c)
ARITHMETIC AVG.			<0.56	<0.09					
AREA SAMPLE									
	11/12	20		<1.1	1.4			<1.1	V-300 A Manway Blk 110

OCCUPATIONAL EXPOSURE LIMIT						
ACGIH 8-HR TWA	10		50	100	5	100
ACGIH SHORT TERM EXPOSURE LIMIT	---		---	150	---	150
OSHA 8-HR TWA		1				
OSHA SHORT TERM EXPOSURE LIMIT		5				

(a) ND=None Detected with the analytical limit of quantitation noted in parenthesis
(b) BLQ=Detectable amount but below the analytical limit of quantitation for the survey sampling conditions.
(c) 3M Easi-Care half-face respirator with OVAG cartridges was worn during the job.

TABLE 3
PERSONAL AIR MONITORING RESULTS FOR ASBESTOS, LIGHT HYDROCARBON III, LOUISIANA DIVISION, PLAQUEMINE, LOUISIANA, 1993

Master Number	Date	Sampling Period	Conc. f/cc Asbestos Sampled TWA	Comment (a)
CONTRACTOR - 8 HR SHIFT				
435-90-9580	10/27	12:45 - 13:20	0.01	Wet method removal of friable asbestos gaskets

OCCUPATIONAL EXPOSURE LIMIT

- **OSHA SHORT TERM EXPOSURE** 1.0

(a) The proper protective clothing was worn during the job. A half-face North 7700 respirator equipped with HEPA filters was worn during the job.

TABLE 4
PERSONAL AIR MONITORING RESULTS FOR REFRACTORY CERAMICS, LIGHT HYDROCARBON III, LOUISIANA DIVISION, PLAQUEMINE, LOUISIANA, 1993

Master Number	Date	Sampling Period	CONCENTRATION, f/cc MATERIAL Sampled TWA	Full-Shift TWA (a)	Comment (b)
CONTRACTOR - 8 HR SHIFT					
437-48-3618	08/05	12:45 - 16:30	0.22	0.10	Brickmason; brick work and kaowool work in Furnace 6
435-27-5138	08/05	13:05 - 16:30	0.42	0.18	Laborer; brick work and kaowool work in Furnace 6
		ARITHMETIC AVERAGE		0.14	

OCCUPATIONAL EXPOSURE LIMIT

- **DOW HIG** 8-Hr TWA 0.5

(a) Full-shift TWA extrapolated assuming no exposure during time not sampled.

(b) The proper protective clothing was worn during the job. A half-face 3M 6000 HEPA respirator was worn during the job.

TABLE 5
PERSONAL AIR MONITORING RESULTS FOR CRYSTALLINE SILICA, AT THE LIGHT HYDROCARBON III PLANT, LOUISIANA DIVISION, PLAQUEMINE, LOUISIANA, 1993

			CONCENTRATION (MG/M3)				
Master #	Date	Sample Dur. (Min.)	Particulate (Respirable)	Crystalline Quartz	Cristobalite	Tridymite (c)	Task
CONTRACT-BRICKMASON; 8 HR SHIFT							
435-13-5481	08/05	220	0.50	ND (0.03) (a)	ND (0.05)	ND (0.1)	Brick work and kaowool work in F-6 furnace (b)
434-88-3027	08/05	210	0.50	ND (0.03)	ND (0.05)	ND (0.1)	Foreman of brick work and kaowool work in F-6 furnace (b)
	ARITHMETIC AVG.		0.50	ND (0.03)	ND (0.05)	ND (0.1)	
OCCUPATIONAL EXPOSURE LIMIT							
ACGIH 8-HR TWA			5	0.1	0.05	0.05	

(a) ND=None Detected with the analytical limit of quantitation noted in parenthesis.
(b) 3M Easi-Care half-face respirator equipped with HEPA filters was worn during the job.
(c) Future sampling needs to be conducted for a longer time period in order to assure Tridymite levels below the TLV.

TABLE 6
PERSONAL NOISE DOSIMETRY RESULTS FROM LIGHT HYDROCARBON III, BLOCK 110, LOUISIANA DIVISION, PLAQUEMINE, LOUISIANA, 1993

Master Number	Date	Min.	% OSHA Allowable: Sampled Dose	% OSHA Allowable: Full-Shift Dose (a)	Equivalent Sound Pressure: 8-Hr Shift (dBA)	Equivalent Sound Pressure: 12-Hr Shift (dBA)	Comment
OPR. SPECIALIST - 12 HR SHIFT							
433538	09/16	599	1.0	1.2	58.1	55.1	Blk 110 Routine Operations (b)
OSHA Permissible Exposure Limit				100	90 dBA	87 dBA	

(a) Full-Shift Dose extrapolated assuming continued exposure during time not sampled.

(b) Hearing protection is required to be worn when pumps are running and for high noise task specific jobs.

Figure 1A:

LOUISIANA DIVISION

INDUSTRIAL HYGIENE HOOD PERFORMANCE TESTING DATA

PLANT: LHC III Building 6803 DATE: February 2, 1993
HOOD I.D.: Lab Hood #1 TESTED BY: Darlene Creel.

Static Pressure Reading **1.1**.

Hood Face Velocity Readings at a(n) **18"** Sash Opening.

186		**196**		**160**
172	**151**	**169**	**160**	**139**
119		**111**		**142**

Smoke Tube Observations With a(n) **18"** Sash Opening -

****GOOD (Air capture by hood is strong and well defined with minimal internal turbulence, and no observable smoke swirling back to hood face when person stands at hood face.)

Designation	Sash Hood Opening	(FPM) FV	(FPM) FVm	Classification
Lab Hood #1	18"	155	111	"A"

Used the Alnor Model 8925 Thermo Anemometer.

FV = Average Face Velocity
FVm = Minimum Measurement
FPM = Feet Per Minute

FIGURE 1B:

LOUISIANA DIVISION

INDUSTRIAL HYGIENE HOOD PERFORMANCE TESTING DATA

PLANT: LHC III Building 6803 DATE: February 2, 1993
HOOD I.D.: Lab Hood #2 TESTED BY: Darlene Creel

Static Pressure Reading 1.2.

Hood Face Velocity Readings at a(n) 18" Sash Opening.

131		140		154
133	139	134	137	133
174		135		156

Smoke Tube Observations With a(n) 18" Sash Opening -

****GOOD (Air capture by hood is strong and well defined with minimal internal turbulence, and no observable smoke swirling back to hood face when person stands at hood face)

Designation	Sash Hood Opening	(FPM) FV	(FPM) FVm	Classification
Lab Hood #2	18"	142	131	"A"

Used the Alnor Model 8925 Thermo Anemometer.

FV = Average Face Velocity
FVm = Minimum Measurement
FPM = Feet Per Minute

FIGURE 1C:

LOUISIANA DIVISION

INDUSTRIAL HYGIENE HOOD PERFORMANCE TESTING DATA

PLANT. LHC III Building 6803 DATE: February 2, 1993
HOOD I D.: Lab Hood #3 TESTED BY: Darlene Creel

Static Pressure Reading **0.80**.

Hood Face Velocity Readings at a(n) **18"** Sash Opening.

126		**125**		**124**
116	**118**	**119**	**124**	**132**
134		**123**		**129**

Smoke Tube Observations With a(n) **18"** Sash Opening -

****GOOD (Air capture by hood is strong and well defined with minimal internal turbulence, and no observable smoke swirling back to hood face when person stands at hood face.)

Designation	Sash Hood Opening	(FPM) FV	(FPM) FVm	Classification
Lab Hood #3	18"	125	116	"A"

Used the Alnor Model 8925 Thermo Anemometer.

FV = Average Face Velocity
FVm = Minimum Measurement
FPM = Feet Per Minute

FIGURE 1D:

LOUISIANA DIVISION

INDUSTRIAL HYGIENE HOOD PERFORMANCE TESTING DATA

PLANT: LHC III Building 6803 DATE: February 2, 1993
HOOD I.D.: Lab Hood #4 TESTED BY: Darlene Creel

Static Pressure Reading 1.7

Hood Face Velocity Readings at a(n) 18" Sash Opening.

168	170	166
173	155	155
150	128	148

126	119		
		153	
130			71*
145	130		

Smoke Tube Observations With a(n) 18" Sash Opening -

****GOOD (Air capture by hood is strong and well defined with minimal internal turbulence, and no observable smoke swirling back to hood face when person stands at hood face.)

Designation	Sash Hood Opening	(FPM) FV	(FPM) FVm	Classification
Lab Hood #4	18"	143	71*	"A"

*Note: This reading is low because of the printer located at the bottom of the hood. All other readings are good. This hood is a strong "A" classification.

Used the Alnor Model 8925 Thermo Anemometer.

FV = Average Face Velocity
FVm = Minimum Measurement
FPM = Feet Per Minute

FIGURE 1E:

LOUISIANA DIVISION

INDUSTRIAL HYGIENE HOOD PERFORMANCE TESTING DATA

PLANT: LHC III Building 6803 DATE: February 2, 1993
HOOD I.D: Lab Hood #5 TESTED BY: Darlene Creel

Static Pressure Reading **0.60**.

Hood Face Velocity Readings at a(n) **18"** Sash Opening.

219	220	214	194	217
185	155	193	188	201
179	124	195	186	216

Smoke Tube Observations With a(n) **18"** Sash Opening -

****GOOD (Air capture by hood is strong and well defined with minimal internal turbulence, and no observable smoke swirling back to hood face when person stands at hood face.)

Designation	Sash Hood Opening	(FPM) FV	(FPM) FVm	Classification
Lab Hood #5	18"	192	124	"A"

Used the Alnor Model 8925 Thermo Anemometer.

FV = Average Face Velocity
FVm = Minimum Measurement
FPM = Feet Per Minute

FIGURE 1F:

LOUISIANA DIVISION

INDUSTRIAL HYGIENE HOOD PERFORMANCE TESTING DATA

PLANT: LHC III Shop Warehouse
HOOD I.D.: Shop Fume Hood

DATE: March 31, 1993
TESTED BY: Darlene Creel

Static Pressure Reading 0.37.

Hood Face Velocity Readings at a(n) 40" (Center Doors) Sash Opening.

187	164	159
187	140	155
197	135	160
169	157	160

Smoke Tube Observations With a(n) 40" (Center Doors) Sash Opening -

****GOOD (Air capture by hood is strong and well defined with minimal internal turbulence, and no observable smoke swirling back to hood face when person stands at hood face.)

Designation	Sash Hood Opening	(FPM) FV	(FPM) FVm	Classification
Shop Fume Hood	40" (Center Doors)	164	135	"A"

Used the Alnor Model 8925 Thermo Anemometer.

FV = Average Face Velocity
FVm = Minimum Measurement
FPM = Feet Per Minute

FIGURE 1G:

LOUISIANA DIVISION

INDUSTRIAL HYGIENE HOOD PERFORMANCE TESTING DATA

PLANT: LHC III
HOOD I.D.: Lab Hood #2

DATE: December 2, 1993
TESTED BY: Darlene Creel

Static Pressure Reading 0.9.

Hood Face Velocity Readings at a(n) 18" Sash Opening.

151		131	133
153	140	111	122
130	134	125	126

Smoke Tube Observations With a(n) 18" Sash Opening -

****GOOD (Air capture by hood is strong and well defined with minimal internal turbulence, and no observable smoke swirling back to hood face when person stands at hood face.)

Designation	Sash Hood Opening	(FPM) FV	(FPM) FVm	Classification
Hood #2	18"	133	111	"A"

Used the Alnor Model 8925 Thermo Anemometer.

FV = Average Face Velocity
FVm = Minimum Measurement
FPM = Feet Per Minute

APPENDIX 4-B and 15-A:

Louisiana Division Industrial Hygiene Department

Request to Temporarily or Permanently Add/Delete a Chemical to the Plant/Department CPAI

Plant/Department: LHC-3 / ETHYLENE

Chemical Name*: DIMETHYL DISULFIDE **DR#:** _ _ _ _ - _ _ _ _
(If known)

Which **Job Classification** do you want to add this chemical to? **(Column #1)**

What is the **chemical being used for** (e.g. an additive, a raw material, a lab reagent)? **(Column #2)**

What is the **degree of exposure** to the chemical (e.g. neglible, low, moderate, high)? **(Column #3)** **Priority Rating** will be assigned by the Industrial Hygienist.

#1 Job Classification	#2 Chemical Material Usage Code	#3 Degree of Exposure	#4 Priority Rating	#5 Action Date
1 ALL	LADD	LOW	5	
2				
3				
4				
5				

***Note:** The chemical name should be cross referenced with the name on the label and on the MSDS for the chemical.

NO hazardous substance should be used in the workplace until an MSDS or equivalent information source (e.g. TIME)is on file in the plant/department Industrial Hygiene Manual.

Retain this completed form in **Section 15 - CPAI** of your IH Manual and forward a copy and the MSDS to the Industrial Hygiene Department, 3502W.

DO A 024241
CONFIDENTIAL

DOW CHEMICAL U.S.A - LOUISIANA DIVISION

CHEMICAL & PHYSICAL AGENT INVENTORY FOR -- AUG 95 PAGE: 1

PLANT : 0681 NAME: LHC III
BUILDING(S) : 6801
SUPERINTENDENT : B.Jackson
INDUSTRIAL HYGIENE CONTACT : D. D'ARMOND
INDUSTRIAL HYGIENIST : Jackie Paul
JOB ASSIGNMENT (10) : INSTRUMENT 18-EMPLOYEE(S)

MATERIAL/PHYSICAL AGENT	DR NUMBER	INDUSTRIAL HYG. GUIDE		DEG OF EXP	PRIORITY RATING (**)	DATA SHEET 1	DATA SHEET 2
ADDITIVES							
1) DIMETHYL DISULFIDE	0002-1761			LOW	5	0593	
2) ETHYL ALCOHOL	0002-3916	1000	PPM	LOW	5		
3) ISOBUTYL ALCOHOL	0002-3994@	50	PPM	LOW	5		
4) DIMETHYL SULFIDE	0010-2056	.5	PPM	LOW	5		
5) N-FORMYLMORPHOLINE	0010-8816			LOW	4		
6) BETZ CORRSHIELD 736	0237-6694			LOW	5		
7) FOAMTROL	0276-4569			NEG	5		
8) BETZ COR-TROL 778P	0294-8165			NEG	5		0285
9) BETZ NA 7	0310-2929			NEG	5		
10) SLIMICIDE C-68	0310-6614			NEG	5	1191	
11) BETZ 2023	0315-5984			NEG	5		0889
12) PROCHEM 20Y8	0319-1706			NEG	5		
13) BETZ 5206-A	0319-1831	2.0	MG/M3-C	NEG	5		
14) BETZ 78P-38027	0320-1896			NEG	5		
15) BETZ 445	0320-1909			NEG	5		
16) BETZ BALANCED POLYMER 6703A	0320-1910	20	PPM-S	NEG	5		
17) BETZ BALANCED POLYMER 6702A	0320-1921	2.0	MG/M3 C	LOW	5		
18) BETZ OPTI-MEEN-80358	0335-9884			NEG	5		0190
BY-PRODUCT							
19) NAPHTHALENE	0001-2088@	10	PPM	LOW	5		
20) 1,3-BUTADIENE	0002-0600	10	PPM	LOW	4		
21) TOLUENE	0002-5070	100	PPM-S	LOW	4		
22) XYLENE	0002-5081	100	PPM-S	LOW	4		
23) BIPHENYL	0002-5183@	0.2	PPM	LOW	5		
24) HYDROGEN SULFIDE	0006-7845	10	PPM	LOW	5		
25) CARBON MONOXIDE	0006-7867	35	PPM	LOW	5		
26) CYCLOPENTADIENE	0008-3272	75	PPM	LOW	5		
27) HYDROGEN	0015-9228	>18	%O2	LOW	5		
28) DICYCLOPENTADIENE	0021-6580	5	PPM	LOW	5		
29) RESIN OIL (TYPE 80)	0200-6646	5	MG/M3	LOW	5		
30) CRUDE BUTADIENE	0269-6448	10	PPM	LOW	5		
31) FUEL OIL	0286-2126			LOW	5		
MISCELLANEOUS							
32) CHLOROTHENE	0001-5883	350	PPM	LOW	5		

DO A 024242
CONFIDENTIAL

DOW CHEMICAL U.S.A - LOUISIANA DIVISION

CHEMICAL & PHYSICAL AGENT INVENTORY FOR -- AUG 95 PAGE: 2

PLANT : 0681 NAME: LHC III
JOB ASSIGNMENT (10) :INSTRUMENT 18 -EMPLOYEES

MATERIAL/PHYSICAL AGENT	DR NUMBER	INDUSTRIAL HYG. GUIDE		DEG OF EXP	PRIORITY RATING (**)	DATA SHEET 2
MISCELLANEOUS						
33) CHLORINE	0006-7834	.5	PPM-C	LOW	5	
34) CATALYST TYPE P	0115-5288			NEG	5	
PHYSICAL STRESSES						
35) NOISE	8000-1032	90 DBA	(C)	LOW	4	
36) HEAT STRESS	9999-0007			LOW	5	
PRODUCT						
37) PROPYLENE	0002-3518	>18	%02	LOW	5	
38) ETHYLENE	0002-3541	>18	%02	LOW	5	
39) BENZENE	0002-5058	1	PPM	LOW	5	
RAW MATERIALS						
40) NAPHTHA	0002-3563	350	MG/M3	LOW	5	
41) ETHANE	0003-0217	>18	%02	LOW	5	
42) PROPANE	0003-0228	1000	PPM	LOW	5	
43) SODIUM HYDROXIDE	0007-9914	2	MG/M3-C	LOW	5	
44) PYROLYSIS GAS	0178-5564			LOW	5	

@ B(D) CHEMICAL
** FILLED IN BY INDUSTRIAL HYGIENE

* * * * * * * * * * DOW CONFIDENTIAL * * * * * * * * * *

DOW CHEMICAL U.S.A - LOUISIANA DIVISION

CHEMICAL & PHYSICAL AGENT INVENTORY FOR -- AUG 95 PAGE: 1

PLANT : 0681 NAME: LHC III
BUILDING(S) : 6801
SUPERINTENDENT : B.Jackson
INDUSTRIAL HYGIENE CONTACT : D. D'ARMOND
INDUSTRIAL HYGIENIST : Jackie Paul
JOB ASSIGNMENT (13) : MAINTENANCE CONTRACT 45-EMPLOYEE(S)

MATERIAL/PHYSICAL AGENT	DR NUMBER	INDUSTRIAL HYG. GUIDE		DEG OF EXP	PRIORITY RATING (**)	DATA SHEET 1	DATA SHEET 2
ADDITIVES							
DIMETHYL DISULFIDE	0002-1761			LOW	5	0593	
ETHYL ALCOHOL	0002-3913	1000	PPM	LOW	4		
[illegible] ALCOHOL	0002-3994@	50	PPM	LOW	4		
DIMETHYL SULFIDE	0010-2056	.5	PPM	LOW	4		
[illegible] MONOETHANOLAMINE	0010-8816			LOW	4		
[illegible]	0037-6694			NEG	5		
[illegible]	0274-4569			NEG	5		
[illegible]	0294-8165			NEG	5		0285
[illegible]	0310-2979			NEG	5		
[illegible]	0310-6614			NEG	5	119.	
[illegible]	0315-5984			NEG	5		0889
[illegible]	0319-1706			NEG	5		
[illegible]	0319-1871	5.0	MG/M3-C	NEG	5		
[illegible]	0320-1[illegible]			NEG	5		
[illegible]	0320-1965			NEG	5		
[illegible]	0320-1910	20	PPM-S	NEG	5		
[illegible]	0320-1971	5.0	MG/M3-C	NEG	5		
[illegible]	0335-4884			NEG	5		0190
[illegible]							
NAPHTHALENE	0001-2088@	10	PPM	LOW	4		
1,3-BUTADIENE	0002-0600	10	PPM	LOW	3		
TOLUENE	0002-5070	100	PPM-S	LOW	4		
XYLENE	0002-5081	100	PPM-S	LOW	4		
BIPHENYL	0002-5183@	0.2	PPM	LOW	3		
HYDROGEN SULFIDE	0006-7845	10	PPM	LOW	4		
CARBON MONOXIDE	0006-7867	35	PPM	LOW	4		
CYCLOPENTADIENE	0008-3272	75	PPM	LOW	4		
HYDROGEN	0015-9228	>18	%O2	LOW	4		
DICYCLOPENTADIENE	0021-6580	5	PPM	LOW	4		
RESIN OIL (TYPE 80)	0200-6646	5	MG/M3	LOW	4		
[illegible] BUTADIENE	0269-6448	10	PPM	LOW	4		
[illegible]	0296-2126			LOW	4		
[illegible]							
[illegible]	0001-5883	350	PPM	LOW	4		

DO A 024244
CONFIDENTIAL

DOW CHEMICAL U.S.A - LOUISIANA DIVISION

CHEMICAL & PHYSICAL AGENT INVENTORY FOR -- AUG 95 PAGE: 2

PLANT : 0681 NAME: LHC III
JOB ASSIGNMENT (13) :MAINTENANCE CONTRACT 45 -EMPLOYEES

MATERIAL/PHYSICAL AGENT	DR NUMBER	INDUSTRIAL HYG. GUIDE		DEG OF EXP	PRIORITY RATING (**)	DATA SHEET 1	DATA SHEET 2
MISCELLANEOUS							
CHLORINE	0006-7834	.5	PPM-C	LOW	4		
CATALYST TYPE F	0115-5288			NEG	5		
CERAMIC FIBER	0311-1453			LOW	4		
[illegible]							
[illegible]							
[illegible]	8000-1032	90 DBA	(C)	MOD	3		
[illegible]	8869-0007	[illegible]		MOD	4		
[illegible]							
[illegible]	0002-3518	[illegible]	%02	LOW	4		
[illegible]	0002-3541	.18	%02	LOW	4		
[illegible]	0002-5058	[illegible]	PPM	LOW	4		
[illegible]							
[illegible]	0002-[illegible]	[illegible]	MG/M3	LOW	4		
[illegible]	0002-[illegible]	[illegible]	%02	LOW	4		
[illegible]	[illegible]-0025	1000	PPM	LOW	4		
[illegible]	0007-9914	[illegible]	MG/M3-C	LOW	4		
[illegible]	0178-5564			LOW	4		

** [illegible] INDUSTRIAL HYGIENE

* * * * * * * * * * DOW CONFIDENTIAL * * * * * * * * * *

DO A 024245
CONFIDENTIAL

DOW CHEMICAL U.S.A - LOUISIANA DIVISION

CHEMICAL & PHYSICAL AGENT INVENTORY FOR -- AUG 95 PAGE: 1

PLANT : 0681 NAME: LHC III
BUILDING(S) : 6801
SUPERINTENDENT : B.Jackson
INDUSTRIAL HYGIENE CONTACT : D. D'ARMOND
INDUSTRIAL HYGIENIST : Jackie Paul
JOB ASSIGNMENT (16) : MATERIAL CONTROLLER 2-EMPLOYEE(S)
JOB ASSIGNMENT (09) : OFFICE/CLERICAL 2-EMPLOYEE(S)

MATERIAL/PHYSICAL AGENT	DR NUMBER	INDUSTRIAL HYG. GUIDE		DEG OF EXP	PRIORITY RATING (**)	DATA SHEET 1	DATA SHEET 2
ADDITIVES							
[illegible] DISULFIDE	0002-1761			LOW	5	0593	
[illegible]	0002-3914	1000	PPM	NEG	5		
[illegible]	0002-3994@	50	PPM	NEG	5		
[illegible]	0010-2054	.5	PPM	NEG	5		
[illegible]	0010-6816			NEG	5		
[illegible]	0037-6694			NEG	5		
[illegible]	0076-4569			NEG	5		
[illegible]	0094-9160			NEG	5		0285
[illegible]	0110-1925			NEG	5		
[illegible]	0310-6614			NEG	5	1191	
[illegible]	0315-5984			NEG	5		0889
[illegible]	0318-1706			NEG	5		
[illegible]	0318-1871	0.0	MG/M3-C	NEG	5		
[illegible]	0320-1844			NEG	5		
[illegible]	0320-1909			NEG	5		
[illegible]	0320-1910	20	PPM-S	NEG	5		
[illegible]	0320-1921	2.0	MG/M3 C	NEG	5		
[illegible]	0370-9884			NEG	5		0190
[illegible]							
19 NAPHTHALENE	0001-2088@	10	PPM	NEG	5		
1,3-BUTADIENE	0002-0600	10	PPM	NEG	5		
TOLUENE	0002-5070	100	PPM-S	NEG	5		
XYLENE	0002-5081	100	PPM-S	NEG	5		
BIPHENYL	0002-5183@	0.2	PPM	NEG	5		
HYDROGEN SULFIDE	0006-7845	10	PPM	NEG	5		
CARBON MONOXIDE	0006-7867	35	PPM	NEG	5		
CYCLOPENTADIENE	0008-3272	75	PPM	NEG	5		
HYDROGEN	0015-9228	>18	%O2	NEG	5		
DICYCLOPENTADIENE	0021-6580	5	PPM	NEG	5		
RESIN OIL (TYPE 80)	0200-6646	5	MG/M3	NEG	5		
[illegible]	0269-6448	10	PPM	NEG	5		
[illegible]	0784-2126			NEG	5	DO A 024246 CONFIDENTIAL	
[illegible]							
32 [illegible]	0001-5863	350	PPM	NEG	5		

DOW CHEMICAL U.S.A - LOUISIANA DIVISION

CHEMICAL & PHYSICAL AGENT INVENTORY FOR -- AUG 95 PAGE: 2

PLANT : 0681 NAME: LHC III
JOB ASSIGNMENT (16) :MATERIAL CONTROLLER 2 -EMPLOYEES

MATERIAL/PHYSICAL AGENT	DR NUMBER	INDUSTRIAL HYG. GUIDE		DEG OF EXP	PRIORITY RATING (**)	DATA SHEET 1	DATA SHEET 2
MISCELLANEOUS							
CHLORINE	0006-7834	.5	PPM-C	NEG	5		
CATALYST TYPE P	0115-5288			NEG	5		
PHYSICAL STRESSES							
[illegible]	8000-1032	90 DBA	(C)	LOW	4		
HEAT STRESS	9999-0007			NEG	5		
[illegible]							
[illegible]	0000-3518	>18	%O2	NEG	5		
[illegible]	0000-3541	>18	%O2	NEG	5		
[illegible]	0000-5058	*	PPM	NEG	5		
[illegible]							
[illegible]	0000-3567	256	MR/HR	NEG	5		
[illegible]	0007-0217	>18	%O2	NEG	5		
[illegible]	0007-0228	1000	PPM	NEG	5		
[illegible]	0007-9911	*	MG/M3-C	NEG	5		
[illegible]	0178-5564			NEG	5		
[illegible]							
[illegible] INDUSTRIAL HYGIENE							

* * * * * * * * * * DOW CONFIDENTIAL * * * * * * * * * *

DO A 024247
CONFIDENTIAL

DOW CHEMICAL U.S.A - LOUISIANA DIVISION

CHEMICAL & PHYSICAL AGENT INVENTORY FOR -- AUG 95 PAGE: 1

PLANT : 0681 NAME: LHC III
BUILDING(S) : 6801
SUPERINTENDENT : B.Jackson
INDUSTRIAL HYGIENE CONTACT : D. D'ARMOND
INDUSTRIAL HYGIENIST : Jackie Paul
JOB ASSIGNMENT (22) : MFG SPEC(NOT OS)ENV,IH 2-EMPLOYEE(S)

MATERIAL/PHYSICAL AGENT	DR NUMBER	INDUSTRIAL HYG. GUIDE		DEG OF EXP	PRIORITY RATING (**)	DATA SHEET 1	DATA SHEET 2
ADDITIVES							
DIMETHYL DISULFIDE	0002-1761			LOW	5	0593	
[illegible] ALCOHOL	0002-3914	1000	PPM	LOW	4		
[illegible] ALCOHOL	0002-3994@	50	PPM	LOW	4		
[illegible]	0010-2056	.5	PPM	LOW	5		
[illegible]	0237-6694			LOW	5		
[illegible]	0294-8147			LOW	5		0235
[illegible]	0310-2559			LOW	5		
[illegible]	0310-6614			LOW	5	1191	
[illegible]	0315-5984			LOW	5		0889
[illegible] POLYMER	[illegible]						
	[illegible]	[illegible]	MG/M3 C	LOW	5		
[illegible]	[illegible]-983			LOW	5		0190
[illegible]							
[illegible]							
[illegible]	[illegible]-0883	10	PPM	MOD	4		
[illegible]	[illegible]	10	PPM	MOD	4		
[illegible]	0007-5070	100	PPM-S	MOD	4		
[illegible]	[illegible]	[illegible]	PPM-S	MOD	4		
[illegible]	0002-5183@	0.2	PPM	MOD	4		
[illegible]	0006-7845	10	PPM	MOD	4		
[illegible]	0004-7867	35	PPM	LOW	5		
[illegible] ATIENT	0003-3272	75	PPM	MOD	4		
HYDROGEN	0015-9228	>18	%O2	MOD	4		
DICYCLOPENTADIENE	0021-6580	5	PPM	MOD	4		
FESIL OIL (TYPE SO)	0200-6646	5	MG/M3	MOD	4		
CRUDE BUTADIENE	0269-6448	10	PPM	MOD	4		
FUEL OIL	0786-2126			MOD	4		
MISCELLANEOUS							
TRICHLOROETHYLENE	0001-5883	350	PPM	LOW	5		
CHLORINE	0006-7834	.5	PPM-C	LOW	5		
CATALYST TYPE F	0115-5288			NEG	5		
PHYSICAL AGENTS							
[illegible]	8000-1032	90 DBA	(C)	MOD	4		
[illegible]	[illegible]			LOW	5		

DO A 024248
CONFIDENTIAL

DOW CHEMICAL U.S.A - LOUISIANA DIVISION

CHEMICAL & PHYSICAL AGENT INVENTORY FOR -- AUG 95 PAGE: 2

[illegible] : 0681 NAME: [illegible]HC III

[illegible] ASSIGNMENT (22) :MFG SPEC(NOT OS)ENV,IH 2 -EMPLOYEES

MATERIAL/PHYSICAL AGENT	DR NUMBER	INDUSTRIAL HYG. GUIDE		DEG OF EXP	PRIORITY RATING (**)	DATA SHEET 1	DATA SHEET 2
PHYSICAL STRESSES							
PRODUCT							
[illegible] ETHYLENE	0002-3518	[illegible]18	%02	MOD	4		
[illegible]	0002-3541	[illegible]	%02	MOD	4		
[illegible]	0002-5059	[illegible]	PPM	MOD	4		
[illegible]							
[illegible]	0002-[illegible]	[illegible]	MG/M3	MOD	4		
[illegible]	0003-0717	[illegible]	%02	MOD	4		
[illegible]	0003-0[illegible]	1000	PPM	MOD	4		
[illegible]	0017-[illegible]	[illegible]	MG/M3-[illegible]	MOD	4		
[illegible]	0178-5644			MOD	4		

[illegible] ENVIRON

* * * * * * * * * * DOW CONFIDENTIAL * * * * * * * * * *

DO A 024249
CONFIDENTIAL

DOW CHEMICAL U.S.A - LOUISIANA DIVISION

CHEMICAL & PHYSICAL AGENT INVENTORY FOR -- AUG 95 PAGE: 1

AGENT : 0681 NAME: LHC III
BUILDING/AREA : 6801
SUPERINTENDENT : B.Jackson
INDUSTRIAL HYGIENE CONTACT : D. D'ARMOND
INDUSTRIAL HYGIENIST : Jackie Paul
JOB ASSIGNMENT (24) : MFG MGR, SUP, DIR 4-EMPLOYEE(S)

MATERIAL/PHYSICAL AGENT	DR NUMBER	INDUSTRIAL HYG. GUIDE		DEG OF EXP	PRIORITY RATING (**)	DATA SHEET 1	DATA SHEET 2
ADDITIVES							
DIMETHYL DISULFIDE	0002-1761			LOW	5	0597	
[illegible]	0002-3916	1000	PPM	NEG	5		
[illegible]	0002-[illegible]	50	PPM	LOW	5		
[illegible] SULFIDE	0010-2054	5	PPM	LOW	5		
[illegible]	0010-8814			NEG	5		
[illegible]	0037-6694			NEG	5		
[illegible]	0037-4569			NEG	5		
[illegible]	0094-8165			NEG	5		0285
[illegible]	0110-7929			NEG	5		
[illegible]	0110-6614			NEG	5	119[illegible]	
[illegible]	0315-5984			NEG	5		0889
[illegible]	[illegible]-1706			NEG	5		
[illegible]	0319-[illegible]	7.0	MG/M3-C	NEG	5		
[illegible]	[illegible]-[illegible]			NEG	5		
[illegible]	[illegible]-[illegible]			NEG	5		
[illegible] MFG 701							
	0320-1910	[illegible]	PPM-S	NEG	5		
[illegible] ER 702A							
[illegible]	[illegible]-1571	7.0	MG/M3 C	NEG	5		
[illegible]	0335-9893			NEG	5		0190
[illegible]							
NAPHTHALENE	0001-2088@	10	PPM	NEG	5		
1,3-BUTADIENE	0002-0600	10	PPM	LOW	4		
TOLUENE	0002-5070	100	PPM-S	LOW	4		
XYLENE	0002-5081	100	PPM-S	NEG	4		
BIPHENYL	0002-5183@	0.2	PPM	NEG	5		
HYDROGEN SULFIDE	0006-7845	10	PPM	LOW	5		
CARBON MONOXIDE	0006-7667	35	PPM	NEG	5		
CYCLOPENTADIENE	0008-3272	75	PPM	NEG	5		
HYDROGEN	0015-9228	19	%O2	NEG	5		
DICYCLOPENTADIENE	0021-6580	5	PPM	NEG	5		
FUEL OIL (TYPE 80)	0200-6646	5	MG/M3	NEG	5		
[illegible]	0269-6448	1[illegible]	PPM	NEG	5		
[illegible]	0284-2114			NEG	5		
[illegible]							
[illegible]	0001-5387	350	PPM	NEG	5		

DO A 024250
CONFIDENTIAL

DOW CHEMICAL U.S.A - LOUISIANA DIVISION

CHEMICAL & PHYSICAL AGENT INVENTORY FOR -- AUG 95 PAGE: 2

PLANT : 0681 NAME: LHC III
OF ASSIGNMENT (24) :MFG MGR, SUP, DIR 4 -EMPLOYEES

MATERIAL/PHYSICAL AGENT	DR NUMBER	INDUSTRIAL HYG. GUIDE		DEG OF EXP	PRIORITY RATING (**)	DATA SHEET 1	DATA SHEET 2
MISCELLANEOUS							
CHLORINE	0006-7834	.5	PPM-C	NEG	5		
CATALYST TYPE P	0115-5288			NEG	5		
PHYSICAL STRESSES							
NOISE	8000-1032	90 DBA	(C)	LOW	4		
HEAT STRESS	9999-0007			LOW	5		
[illegible]							
[illegible]	0002-3518	>18	%02	NEG	5		
[illegible]	0002-3541	>18	%02	NEG	5		
[illegible]	0007-5054	1	PPM	NEG	5		
[illegible]							
[illegible]	0001-3547	350	MG/M3	NEG	5		
[illegible]	0003-0217	>18	%02	NEG	5		
[illegible]	0003-0228	1000	PPM	NEG	5		
[illegible]	0007-9914	2	MG/M3-C	NEG	5		
[illegible]	0178-5564			NEG	5		

[illegible]
** [illegible] BY INDUSTRIAL HYGIENE

* * * * * * * * * * DOW CONFIDENTIAL * * * * * * * * * *

DO A 024251
CONFIDENTIAL

DOW CHEMICAL U.S.A - LOUISIANA DIVISION

CHEMICAL & PHYSICAL AGENT INVENTORY FOR -- AUG 95 PAGE: 1

PLANT : 0681 NAME: LHC III
BUILDING(S) : 6801
SUPERINTENDENT : B.Jackson
INDUSTRIAL HYGIENE CONTACT : D. D'ARMOND
INDUSTRIAL HYGIENIST : Jackie Paul
JOB ASSIGNMENT (26) : MFG TECHNICAL 12-EMPLOYEE(S)

MATERIAL/PHYSICAL AGENT	DR NUMBER	INDUSTRIAL HYG. GUIDE		DEG OF EXP	PRIORITY RATING (**)	DATA SHEET 1	DATA SHEET 2
ADDITIVES							
DIMETHYL DISULFIDE	0002-1761			LOW	5	0593	
[illegible] ALCOHOL	0002-3914	1000	PPM	LOW	4		
[illegible]BUTYL ALCOHOL	0002-3994@	50	PPM	LOW	4		
[illegible] SULFIDE	[illegible]-2056	.5	PPM	LOW	4		
[illegible] MORPHOLINE	[illegible]-8816			NEG	5		
[illegible]	[illegible]-6654			NEG	5		
[illegible]	[illegible]-[illegible]			NEG	5		
[illegible]	0294-8165			NEG	5		0285
[illegible]	0310-7929			NEG	5		
[illegible]	0710-[illegible]614			NEG	5	1191	
[illegible]	0715-5984			NEG	5		0889
[illegible]	0316-[illegible]			NEG	5		
[illegible]	0319-1871	2.0	MG/M3-C	NEG	5		
[illegible]	0320-1894			NEG	5		
[illegible]	0320-1902			NEG	5		
[illegible] POLYMER 6707A							
	0320-1910	20	PPM-S	NEG	5		
[illegible] BALANCED POLYMER 6707A							
	0320-1921	7.0	MG/M3 C	NEG	5		
[illegible]-[illegible]-[illegible]-[illegible]58	0335-9884			NEG	5		0190
[illegible]							
NAPHTHALENE	0001-2088@	10	PPM	LOW	4		
1,3-BUTADIENE	0002-0600	10	PPM	LOW	4		
TOLUENE	0002-5070	100	PPM-S	LOW	4		
XYLENE	0002-5081	100	PPM-S	LOW	4		
B PHENYL	0002-5183@	0.2	PPM	LOW	4		
HYDROGEN SULFIDE	0006-7845	10	PPM	LOW	4		
CARBON MONOXIDE	0006-7867	35	PPM	LOW	4		
CYCLOPENTADIENE	0008-3272	75	PPM	LOW	4		
HYDROGEN	0015-9228	>18	%O2	LOW	4		
DICYCLOPENTADIENE	0021-6580	5	PPM	LOW	4		
RESIN OIL (TYPE 80)	0200-6646	5	MG/M3	LOW	4		
[illegible] PENTADIENE	0265-6448	10	PPM	LOW	4		
[illegible]	0286-21[illegible]			LOW	4		
[illegible]							
[illegible]	0001-5883	350	PPM	LOW	4		

DO A 024252
CONFIDENTIAL

DOW CHEMICAL U.S.A - LOUISIANA DIVISION

CHEMICAL & PHYSICAL AGENT INVENTORY FOR -- AUG 95 PAGE: 2

PLANT : 0681 NAME: LHC III
TOP MANAGEMENT (CA) :MFG TECHNICAL 12 -EMPLOYEES

MATERIAL/PHYSICAL AGENT	DR NUMBER	INDUSTRIAL HYG. GUIDE		DEG OF EXP	PRIORITY RATING (**)	DATA SHEET 1	DATA SHEET 2
MISCELLANEOUS							
CHLORINE	0006-7834	.5	PPM-C	LOW	4		
CATALYST TYPE P	0115-5288			NEG	5		
PHYSICAL STRESSES							
[illegible]	8000-1030	90 DBA	(C)	LOW	4		
[illegible]	9999-0007			LOW	4		
[illegible]							
[illegible]	0002-3518	[illegible]	%02	LOW	4		
[illegible]	0002-3541	[illegible]	%02	LOW	4		
[illegible]	0002-5059	1	PPM	LOW	4		
[illegible]							
[illegible]	0002-3513	[illegible]	MG/M3	LOW	4		
[illegible]	0003-0217	[illegible]	%02				
[illegible]	0003-0228	[illegible]	PPM	LOW	4		
[illegible]	[illegible]-2914	1	MG/M3-C	LOW	4		
[illegible]	0178-5564			LOW	4		

[illegible] INDUSTRIAL HYGIENE

* * * * * * * * * DOW CONFIDENTIAL * * * * * * * * * *

DO A 024253
CONFIDENTIAL

DOW CHEMICAL U.S.A - LOUISIANA DIVISION

CHEMICAL & PHYSICAL AGENT INVENTORY FOR -- AUG 95 PAGE: 1

[illegible]NT : 0681 NAME: LHC III
[illegible] [illegible] : 6801
[illegible]RINTENDENT : B.Jackson
[illegible]STRIAL HYGIENE CONTACT : D. D'ARMOND
[illegible]STRIAL HYGIENIST : Jackie Paul
[illegible] ASSIGNMENT (28) : CHEMIST/LABORATORY 8-EMPLOYEE(S)

MATERIAL PHYSICAL AGENT	DR NUMBER	INDUSTRIAL HYG. GUIDE		DEG OF EXP	PRIORITY RATING (**)	DATA SHEET 1	DATA SHEET 2
[illegible]DITIVES							
[illegible] DISULFIDE	0002-1761			LOW	5	0557	
[illegible]	0002-3916	1000	PPM	LOW	4		
[illegible] ALCOHOL	0002-3546	[illegible]	PPM	LOW	4		
[illegible]	0010-2054	[illegible]	PPM	LOW	5		
[illegible]	0010-9816			LOW	4		
[illegible]	[illegible]			LOW	5		
[illegible]	[illegible]			LOW	5		
[illegible]	[illegible]			LOW	5		0285
[illegible]	[illegible]			LOW	5		
[illegible]	[illegible]			LOW	5	[illegible]	
[illegible]	[illegible]-5584			LOW	5		0889
[illegible]	[illegible]			LOW	5		
[illegible]	[illegible]-1871	[illegible]	MG/M3-C	LOW	5		
[illegible]	[illegible]			LOW	5		
[illegible]	[illegible]			LOW	5		
[illegible]							
	[illegible]	20	PPM-S	LOW	5		
[illegible]							
	[illegible]-1921	3.0	MG/M3 C	LOW	5		
[illegible]	[illegible]-9804			LOW	5		0190
[illegible]							
LAB-THA ENE	0001-2088@	10	PPM	LOW	4		
1,3-BUTADIENE	0002-0600	10	PPM	LOW	4		
TOLUENE	0002-5070	100	PPM-S	LOW	4		
XYLENE	0002-5081	100	PPM-S	LOW	4		
[illegible]ENE	0002-5183@	0.2	PPM	LOW	4		
HYDROGEN SULFIDE	0006-7845	10	PPM	LOW	4		
CARBON MONOXIDE	0006-7867	35	PPM	LOW	5		
[illegible]DIENE	0008-3272	75	PPM	LOW	4		
HYDROGEN	0015-9228	18	%O2	LOW	4		
[illegible] TABLENE	0021-6580	5	PPM	LOW	4		
[illegible] OIL (TYPE 80)	0200-6646	5	MG/M3	LOW	4		
[illegible] TABLENE	[illegible]-448	10	PPM	LOW	4		
[illegible]	[illegible]-2126			LOW	4		
[illegible]							
[illegible]	[illegible]-5583	750	PPM	LOW	5		

DO A 024254
CONFIDENTIAL

DOW CHEMICAL U.S.A - LOUISIANA DIVISION

CHEMICAL & PHYSICAL AGENT INVENTORY FOR -- AUG 95 PAGE: 2

PLANT : 0681 NAME: LHC III
JOB ASSIGNMENT (28) :CHEMIST/LABORATORY B -EMPLOYEES

MATERIAL/PHYSICAL AGENT	DR NUMBER	INDUSTRIAL HYG. GUIDE		DEG OF EXP	PRIORITY RATING (**)	DATA SHEET 1	DATA SHEET 2
MISCELLANEOUS							
CHLORINE	0006-7834	.5	PPM-C	LOW	5		
CATALYST TYPE P	0115-5288			NEG	5		
[illegible]							
[illegible]	8000-1[illegible]32	90 DEA	(C)	LOW	4		
[illegible]	9999-0007			LOW	5		
[illegible]							
[illegible]	0002-3519	>18	%02	LOW	4		
[illegible]	0002-7541	>19	%02	LOW	4		
[illegible]	0002-5058	[illegible]	PPM	LOW	4		
[illegible]							
[illegible]	0002-3563	350	MG/M3	LOW	4		
[illegible]	0003-0014	>19	%02	LOW	4		
[illegible]	0007-0227	1000	PPM	LOW	4		
[illegible]	0007-9914	2	MG/M3-C	LOW	4		
[illegible]	0175-5564			LOW	4		

[illegible] INDUSTRIAL HYGIENE

* * * * * * * * * * DOW CONFIDENTIAL * * * * * * * * * *

DO A 024255
CONFIDENTIAL

DOW CHEMICAL U.S.A - LOUISIANA DIVISION

CHEMICAL & PHYSICAL AGENT INVENTORY FOR -- AUG 95 PAGE: 1

PLANT : 0681 NAME: LHC III
BUILDING(S) : 6801
SUPERINTENDENT : B.Jackson
INDUSTRIAL HYGIENE CONTACT : D. D'ARMOND
INDUSTRIAL HYGIENIST : Jackie Paul
JOB ASSIGNMENT (38) : OPERATIONS SPECIALIST 24-EMPLOYEE(S)

MATERIAL/PHYSICAL AGENT	DR NUMBER	INDUSTRIAL HYG. GUIDE		DEG OF EXP	PRIORITY RATING (**)	DATA SHEET 1	DATA SHEET 2
ADDITIVES							
DIMETHYL DISULFIDE	0002-1761			LOW	5	0593	
ETHYL ALCOHOL	0002-3916	1000	PPM	LOW	4		
[illegible] ALCOHOL	0002-3994@	50	PPM	LOW	4		
DIMETHYL SULFIDE	0010-2056	.5	PPM	LOW	5		
[illegible]	0010-6816			LOW	4		
[illegible]	0237-6694			LOW	5		
[illegible]	0276-4568			LOW	4		
[illegible]	0294-8165			LOW	5		0285
[illegible]	0510-2929			LOW	5		
[illegible]	0710-4614			LOW	5	1191	
[illegible]	0315-5984			LOW	4		0889
[illegible]	0719-1704			LOW	4		
[illegible]	0715-1871	[illegible]	MG/M3-C	LOW	4		
[illegible]	0720-1944			LOW	4		
[illegible]	0320-1908			LOW	4		
[illegible]	[illegible]	[illegible]	PPM-S	LOW	4		
[illegible]	0720-1931	7.0	MG/M3 C	LOW	5		
[illegible]	0335-5794			LOW	4		0190
[illegible]							
NAPHTHALENE	0001-2088@	10	PPM	MOD	4		
1,3-BUTADIENE	0002-0600	10	PPM	MOD	4		
TOLUENE	0002-5070	100	PPM-S	MOD	4		
XYLENE	0002-5081	100	PPM-S	MOD	4		
[illegible]	0002-5183@	0.2	PPM	MOD	4		
HYDROGEN SULFIDE	0006-7845	10	PPM	MOD	4		
CARBON MONOXIDE	0006-7867	35	PPM	LOW	5		
CYCLOPENTADIENE	0008-3272	75	PPM	MOD	4		
HYDROGEN	0015-9228	>18	%O2	LOW	4		
DICYCLOPENTADIENE	0021-6580	5	PPM	MOD	4		
FRESH OIL (TYPE 80)	0200-6646	5	MG/M3	MOD	4		
[illegible] BUTADIENE	0269-6448	10	PPM	MOD	4		
[illegible]	0334-2136			MOD	4		
[illegible]							
[illegible]	0001-5883	350	PPM	LOW	5		

DO A 024256
CONFIDENTIAL

DOW CHEMICAL U.S.A - LOUISIANA DIVISION

CHEMICAL & PHYSICAL AGENT INVENTORY FOR -- AUG 95 PAGE: 2

PLANT : 0681 NAME: LHC III
JOB ASSIGNMENT (38) :OPERATIONS SPECIALIST 24 +EMPLOYEES

MATERIAL/PHYSICAL AGENT	DR NUMBER	INDUSTRIAL HYG. GUIDE		DEG OF EXP	PRIORITY RATING (**)	DATA SHEET 1	DATA SHEET 2
MISCELLANEOUS							
CHLORINE	0006-7834	.5	PPM-C	LOW	5		
CATALYST TYPE B	0115-5288			NEG	5		
PHYSICAL STRESSES							
[illegible]	9000-1032	90 DBA	(C)	MOD	3		
[illegible]	9999-0007			LOW	5		
[illegible]							
[illegible]	0002-3518	>18	%02	MOD	4		
[illegible]	[illegible]-3544	>18	%02	MOD	4		
[illegible]	[illegible]-5059	[illegible]	PPM	MOD	4		
[illegible]							
[illegible]	[illegible]	[illegible]	MG/M3	MOD	4		
[illegible]	[illegible]-717	[illegible]	%02	MOD	4		
[illegible]	[illegible]	[illegible]	PPM	MOD	4		
[illegible]	[illegible]	[illegible]	MG/M3-C	MOD	4		
[illegible]	0178-5564			MOD	4		
[illegible]							
[illegible] INDUSTRIAL HYGIENE							

* * * * * * * * * * DOW CONFIDENTIAL * * * * * * * * * *

DO A 024257
CONFIDENTIAL

DOW CHEMICAL U.S.A - LOUISIANA DIVISION

CHEMICAL & PHYSICAL AGENT INVENTORY FOR -- AUG 95 PAGE: 1

PLANT : 0681 NAME: LHC III
BUILDING(S) : 6801
SUPERINTENDENT : B.Jackson
INDUSTRIAL HYGIENE CONTACT : D. D'ARMOND
INDUSTRIAL HYGIENIST : Jackie Paul
JOB ASSIGNMENT (42) : SR. OPERATIONS SPECIALIST 28-EMPLOYEE(S)

MATERIAL/PHYSICAL AGENT	DR NUMBER	INDUSTRIAL HYG. GUIDE		DEG OF EXP	PRIORITY RATING (**)	DATA SHEET 1	DATA SHEET 2
ADDITIVES							
DIMETHYL DISULFIDE	0002-1761			LOW	5	0593	
ETHYL ALCOHOL	0002-3916	1000	PPM	LOW	4		
[illegible] ALCOHOL	0002-3994@	50	PPM	LOW	4		
DIMETHYL SULFIDE	0010-2056	.5	PPM	LOW	4		
[illegible]MORPHOLINE	0010-8817			LOW	4		
[illegible]	0037-6694			LOW	5		
[illegible]	0276-4569			NEG	5		
[illegible]	0274-8165			NEG	5		0235
[illegible]	0310-2829			NEG	5		
[illegible]	0310-6614			NEG	5	1191	
[illegible]	0315-5984			NEG	5		0889
[illegible]	0319-1707			NEG	5		
[illegible]	0319-1831	1.0	MG/M3-C	NEG	5		
[illegible]	0320-1896			NEG	5		
[illegible]	0320-1905			NEG	5		
[illegible]							
[illegible]	0320-1910	20	PPM-S	NEG	5		
[illegible]							
[illegible]	0320-1921	7.0	MG/M3 C	LOW	5		
[illegible]	0321-6850			NEG	5		0190
[illegible]							
NAPHTHALENE	0001-2088@	10	PPM	LOW	4		
1,3-BUTADIENE	0002-0600	10	PPM	LOW	4		
TOLUENE	0002-5070	100	PPM-S	LOW	4		
XYLENE	0002-5081	100	PPM-S	LOW	4		
BIPHENYL	0002-5183@	0.2	PPM	LOW	4		
HYDROGEN SULFIDE	0006-7845	10	PPM	LOW	4		
CARBON MONOXIDE	0006-7867	35	PPM	LOW	4		
CYCLOPENTADIENE	0008-3272	75	PPM	LOW	4		
HYDROGEN	0015-9228	>18	%O2	LOW	4		
DICYCLOPENTADIENE	0021-6580	5	PPM	LOW	4		
RESIN OIL (TYPE 80)	0200-6646	5	MG/M3	LOW	4		
CRUDE BUTADIENE	0269-6445	10	PPM	LOW	4		
[illegible] OIL	0286-2126			LOW	4		
[illegible]					DO A 024258 CONFIDENTIAL		
[illegible]	0001-5883	350	PPM	LOW	4		

DOW CHEMICAL U.S.A - LOUISIANA DIVISION

CHEMICAL & PHYSICAL AGENT INVENTORY FOR -- AUG 95 PAGE: 2

PLANT : 0681 NAME: LHC III

JOB ASSIGNMENT (42) :SR. OPERATIONS SPECIALIST 28 -EMPLOYEES

MATERIAL/PHYSICAL AGENT	DR NUMBER	INDUSTRIAL HYG. GUIDE		DEG OF EXP	PRIORITY RATING (**)	DATA SHEET 1	DATA SHEET 2
MISCELLANEOUS							
CHLORINE	0006-7834	.5	PPM-C	LOW	4		
CATALYST TYPE P	0115-5288			NEG	5		
[illegible] STRESSES							
[illegible]	[illegible]	90 DBA	[illegible]	LOW	4		
[illegible]	9999-0007			LOW	4		
[illegible]							
[illegible]	[illegible]	[illegible]	%O2	LOW	4		
[illegible]	[illegible]	[illegible]	%O2	LOW	4		
[illegible]	[illegible]		PPM	LOW	4		
[illegible]							
[illegible]	[illegible]	[illegible]	MD/M3	LOW	4		
[illegible]	[illegible]	[illegible]	%O2	LOW	4		
[illegible]	[illegible]	[illegible]	PPM	LOW	4		
[illegible]	[illegible]	[illegible]	MG/M3-C	LOW	4		
[illegible]	[illegible]			LOW	4		

[illegible] HYGIENE

* * * * * * * * * * * CONFIDENTIAL * * * * * * * * * *

DO A 024259
CONFIDENTIAL

DOW CHEMICAL U.S.A - LOUISIANA DIVISION

CHEMICAL & PHYSICAL AGENT INVENTORY FOR -- AUG 95 PAGE: 1

AGENT : 0681 NAME: LHC III
DIVISION(08/3) : 6801
SUPERINTENDENT : B.Jackson
INDUSTRIAL HYGIENE CONTACT : D. D'ARMOND
INDUSTRIAL HYGIENIST : Jackie Paul
JOB ASSIGNMENT (05) : SHIFT SUPERVISOR 6-EMPLOYEE(S)

MATERIAL/PHYSICAL AGENT	DR NUMBER	INDUSTRIAL HYG. GUIDE		DEG OF EXP	PRIORITY RATING (**)	DATA SHEET 1	DATA SHEET 2
ADDITIVES							
DIMETHYL DISULFIDE	0002-1761			LOW	5	0593	
[illegible] ALCOHOL	0002-3916	1000	PPM	LOW	4		
[illegible] ALCOHOL	0002-79948	50	PPM	LOW	4		
[illegible]	0010-205-	.5	PPM	LOW	4		
[illegible]	0010-8816			NEG	5		
[illegible]	0[illegible]-6694			NEG	5		
[illegible]	[illegible]-4549			NEG	5		
[illegible]	0294-[illegible]			NEG	5		0285
[illegible]	3[illegible]-7925			NEG	5		
[illegible]	0316-[illegible]			NEG	5	[illegible]	
[illegible]	0[illegible]-7854			NEG	5		0889
[illegible]	0319-1706			NEG	5		
[illegible]	0319-[illegible]	[illegible]	MG/M3-C	NEG	5		
[illegible]	0[illegible]-1842			NEG	5		
[illegible]	[illegible]-[illegible]			NEG	5		
[illegible]							
[illegible]	0330-1[illegible]	20	PPM-S	NEG	5		
[illegible]							
[illegible]	0330-1[illegible]	[illegible]	MG/M3 C	NEG	5		
[illegible]	0335-7894			NEG	5		0190
[illegible]							
[illegible]							
[illegible]TYLENE	0001-20880	10	PPM	LOW	4		
1,3-BUTADIENE	0002-0600	10	PPM	LOW	4		
TOLUENE	0002-5070	100	PPM-S	LOW	4		
XYLENE	0002-5081	100	PPM-S	LOW	4		
LITHIUM	0002-51839	0.2	PPM	LOW	4		
HYDROGEN SULFIDE	0006-7845	10	PPM	LOW	4		
CARBON MONOXIDE	0006-7867	35	PPM	LOW	4		
1,3-CYCLOPENTADIENE	0008-3272	75	PPM	LOW	4		
HYDROGEN	0015-9226	>18	%O2	LOW	4		
1,3-CYCLOPENTADIENE	0021-6580	5	PPM	LOW	4		
FUEL OIL (TYPE 6)	0200-6646	5	MG/M3	LOW	4		
[illegible]	0269-[illegible]	10	PPM	LOW	4		
[illegible]	0286-2126			LOW	4		
[illegible]							
[illegible]	0001-5887	350	PPM	LOW	4		

DO A 024260
CONFIDENTIAL

DOW CHEMICAL U.S.A - LOUISIANA DIVISION

CHEMICAL & PHYSICAL AGENT INVENTORY FOR -- AUG 95 PAGE: 2

PLANT : 0681 NAME: LHC III
JOB ASSIGNMENT (05) :SHIFT SUPERVISOR 6 -EMPLOYEES

MATERIAL/PHYSICAL AGENT	DR NUMBER	INDUSTRIAL HYG. GUIDE		DEG OF EXP	PRIORITY RATING (**)	DATA SHEET 1	DATA SHEET 2
MISCELLANEOUS							
CHLORINE	0006-7834	.5	PPM-C	LOW	4		
CATALYST TYPE P	0115-5288			NEG	5		
PHYSICAL STRESSES							
NOISE	9000-1032	90 DBA	(C)	LOW	4		
[illegible]	9907-0007			LOW	4		
[illegible]							
[illegible]	0000-3518	[illegible]	%02	LOW	4		
[illegible]	0000-7541	[illegible]	%02	LOW	4		
[illegible]	0007-5058	1	PPM	LOW	4		
[illegible]							
[illegible]	[illegible]-7567	350	MG/M3	LOW	4		
[illegible]	[illegible]	[illegible]	%02	LOW	4		
[illegible]	0007-0225	1000	PPM	LOW	4		
[illegible]	0607-9914	2	MG/M3-C	LOW	4		
[illegible]	0178-5564			LOW	4		

[illegible]
[illegible] INDUSTRIAL HYGIENE

* * * * * * * * * DOW CONFIDENTIAL * * * * * * * * * * *

DO A 024261
CONFIDENTIAL

DOW CHEMICAL U.S.A - LOUISIANA DIVISION

CHEMICAL & PHYSICAL AGENT INVENTORY FOR -- AUG 95 PAGE: 1

PLANT : 0681 NAME: LHC III
BUILDING(S) : 6801
SUPERINTENDENT : B.Jackson
INDUSTRIAL HYGIENE CONTACT : D. D'ARMOND
INDUSTRIAL HYGIENIST : Jackie Paul
JOB ASSIGNMENT (06) : MAINTENANCE 4-EMPLOYEE(S)

MATERIAL/PHYSICAL AGENT	DR NUMBER	INDUSTRIAL HYG. GUIDE		DEG OF EXP	PRIORITY RATING (**)	DATA SHEET 1	DATA SHEET 2
ADDITIVES							
DIMETHYL DISULFIDE	0002-1761			LOW	5	0593	
ETHYL ALCOHOL	0002-3916	1000	PPM	LOW	4		
[illegible] ALCOHOL	0002-3954@	50	PPM	LOW	4		
[illegible] SULFIDE	0010-2055	.5	PPM	LOW	5		
[illegible]MORPHOLINE	0010-8816			LOW	4		
[illegible]	0237-6694			NEG	5		
[illegible]	0274-4569			NEG	5		
[illegible]	0294-8165			NEG	5		0285
[illegible]	0310-2919			NEG	5		
[illegible]	0310-6614			NEG	5	1191	
[illegible]	0315-5984			NEG	5		0889
[illegible]	0319-1706			NEG	5		
[illegible]	0319-1831	2.0	MG/M3-C	NEG	5		
[illegible]	0320-1887			NEG	5		
[illegible]	0320-1905			NEG	5		
[illegible]	0320-1910	20	PPM-S	NEG	5		
[illegible]	0320-1921	2.0	MG/M3 C	NEG	5		
[illegible]	0325-9884			NEG	5		0190
[illegible]							
CARBON BLACK	0001-2088@	10	PPM	LOW	4		
1,3-BUTADIENE	0002-0600	10	PPM	LOW	4		
TOLUENE	0002-5070	100	PPM-S	LOW	4		
XYLENE	0002-5081	100	PPM-S	LOW	4		
BIPHENYL	0002-5183@	0.2	PPM	LOW	4		
HYDROGEN SULFIDE	0006-7845	10	PPM	LOW	4		
CARBON MONOXIDE	0006-7867	35	PPM	LOW	5		
CYCLOPENTADIENE	0008-3272	75	PPM	LOW	4		
HYDROGEN	0015-9228	>18	%O2	LOW	4		
DICYCLOPENTADIENE	0021-6580	5	PPM	LOW	4		
RESIN OIL (TYPE 80)	0200-6646	5	MG/M3	LOW	4		
TRANS BUTADIENE	0269-6448	10	PPM	LOW	4		
[illegible]	0286-2126			LOW	4		
[illegible]							
[illegible]	0001-5887	350	PPM	LOW	5		

DO A 024262
CONFIDENTIAL

DOW CHEMICAL U.S.A - LOUISIANA DIVISION

CHEMICAL & PHYSICAL AGENT INVENTORY FOR -- AUG 95 PAGE: 2

PLANT : 0681 NAME: LHC III
TOP ASSIGNMENT (06) :MAINTENANCE 4 -EMPLOYEES

MATERIAL/PHYSICAL AGENT	DR NUMBER	INDUSTRIAL HYG. GUIDE		DEG OF EXP	PRIORITY RATING (**)	DATA SHEET 1	DATA SHEET 2
MISCELLANEOUS							
CHLORINE	0006-7834	.5	PPM-C	LOW	5		
CATALYST TYPE P	0115-5288			NEG	5		
PHYSICAL STRESSES							
NOISE	9000-[illegible]	90 DBA	[illegible]	MOD	4		
HEAT STRESS	9999-0007			LOW	5		
[illegible]							
[illegible]	0002-3518	18	%O2	LOW	4		
[illegible]	0002-3541	[illegible]8	%O2	LOW	4		
[illegible]	0007-5058	1	PPM	LOW	4		
[illegible]							
[illegible]	0002-3563	750	MG/M3	LOW	4		
[illegible]	0007-0217	[illegible]	%O2	LOW	4		
[illegible]	0007-0028	1000	PPM	LOW	4		
[illegible]	0007-9914	2	MG/M3-C	LOW	4		
[illegible]	0178-5564			LOW	4		

[illegible]
[illegible] INDUSTRIAL HYGIENE

* * * * * * * * * * D W CONFIDENTIAL * * * * * * * * * *

DO A 024263
CONFIDENTIAL

Industrial Hygiene Monitoring Program

PURPOSE

The purpose of the Industrial Hygiene Monitoring Program is to schedule personal and area monitoring for Light Hydrocarbon III to be completed during 1995. This program will identify the personal and area monitoring, sampling strategy and methodology. This program is a guideline for routine monitoring and does not address all monitoring needs for special projects or unplanned events.

SUMMARY OF PAST DATA

Confirmatory comprehensive monitoring for benzene compliance was conducted during the latter part of 1992 and early 1993. Short-term excursion as well as time weighted average monitoring are within the established guidelines for routine operations. Non-routine jobs during shutdown and maintenance operations will continue to be monitored for compliance. The Furnace I and Analyzer job assignments need a couple more samples to verify levels below the action level according to the benzene standard termination of monitoring guidelines. Additional benzene monitoring will be conducted this year to assess potential exposure changes in job assignments affected by the benzene expansion project. Dicyclopentadiene monitoring will be conducted at the same time for these job assignments because of the process changes.

One sample was collected during tank car loading operation of biphenyl; however, the analytical detection limit was not low enough to adequately evaluate the sample result. Additional sampling for biphenyl during tank car loaded is planned for 1995.

Comprehensive initial monitoring for 1,3-butadiene is planned for late 1995 in anticipation of the proposed 1,3-butadiene standard becoming final in 1995. Previous 1,3-butadiene monitoring results are well below the proposed permissible exposure of 2 ppm; however, the standard will only allow monitoring conducted within the last 12 months to qualify as initial monitoring. Monitoring should not begin until checking with Industrial Hygiene (after June, 1995) to verify effective dates of the proposed standard.

Toluene and xylene levels are well below established guidelines and will not be monitored again until 1997. At that time confirmatory monitoring for highest potential jobs will be sampled.

A comprehensive noise monitoring program was done in 1992. The results of this survey can be found in the separate report LAD-LHC #3 92.02. Personal noise dosimetry should be done in 3 years to confirm noise levels unless there is a change which could affect the noise exposures. An area noise survey is planned for 1995 to assess any potential noise changes due to the benzene expansion project.

Other non-routine monitoring has been conducted for refractory ceramic fibers, crystalline silica, mercury, arsine, hexes, and 4-vinyl cyclohexene and results are below exposure guidelines. Monitoring during catalyst change and C-450 maintenance is planned to occur when the jobs are scheduled. Non-routine maintenance jobs will continue to be monitored for benzene compliance.

SAMPLING STRATEGY

Monitoring plans and sampling strategy for noise, benzene, 1,3-butadiene, biphenyl, nickel carbonyl, styrene, and DCPD are defined in the Tables below.

Continued on next page

Industrial Hygiene Monitoring Program

8-hour TWA

TABLE 1: 8-hour TWA Monitoring

Job Description/Area	Job # Code	Group Size	Agents	# Samples
Inst./Electrical	10	17	Benzene/1,3-Butadiene/DCPD	2-4
Contract	13	55	Benzene/1,3-Butadiene	6-9
Engineer	26	14	Benzene/1,3-Butadiene	2-4
Env. Spec.	22	2	Benzene/1,3-Butadiene	2-4
Lab Supv.	05	1	1,3-Butadiene	2
Quality Control O.S.	38	1	1,3-Butadiene	2
Maint. O.S.	38	1	1,3-Butadiene	2
Lab S.O.S.	42	1	1,3-Butadiene	2
Office Prof.	09	2	1,3-Butadiene	1

12-hour TWA-Ethylene Side

TABLE 2: 12-hour TWA Monitoring

Job Description/Area	Job # Code	Group Size	Agents	# Samples
Furnace I Opr.	38	4	Benzene/1,3-Butadiene	2/4-6
Mechanical O.S.	38	4	1,3-Butadiene	4-6
Furnace II O.S.	38	4	1,3-Butadiene	4-6
Finishing O.S.	38	4	1,3-Butadiene	4-6
Board S.O.S.	42	4	1,3-Butadiene	2
Shift Supervisor	05	2	1,3-Butadiene	2

Continued on next page

Industrial Hygiene Monitoring Program

12-hour TWA-Benzene Side

TABLE 3: 12-hour TWA Monitoring

Job Description/Area	Job # Code	Group Size	Agents	# Samples
Extraction,Hydro. O.S.	38	4	Benzene/1,3-Butadiene/DCPD	4-6
BTX O.S.	38	4	Benzene/1,3-Butadiene/DCPD	4-6
Blk 58 O.S.	38	4	Benzene/1,3-Butadiene/DCPD	4-6
Board S.O.S.	42	4	Benzene/1,3-Butadiene/DCPD	2
Shift Supervisor	05	2	Benzene/1,3-Butadiene/DCPD	2

12-hour TWA-Block 110

TABLE 4: 12-hour TWA Monitoring

Job Description/Area	Job # Code	Group Size	Agents	# Samples
Operations O.S.	38	5	1,3-Butadiene	4-6
Shift Supervisor	05	1	1,3-Butadiene	2

12-hour TWA-Lab

TABLE 5: 12-hour TWA Monitoring

Job Description/Area	Job # Code	Group Size	Agents	# Samples
Lab O.S.	38	4	1,3-Butadiene	2

Continued on next page

Industrial Hygiene Monitoring Program

STEL/Task

TABLE 6: 15-minute STEL or Task Monitoring

Job Discription/Area	Job # Code	Group Size	Task	Agent	# Samples
Analyzer Specialist	10	5	Anal. House Round	Benzene	2
Contract-Loader	38	2	Loading Tank Car	Biphenyl/Styrene	2-4
Maintenance			C-450	4-VCH	1-2
Catalyst change			R-550	Nickel carbonyl	1-2
Non-Routine Maint.				Bz/1,3-Butadiene	4-6

Area

TABLE 7: Area Monitoring

Job Discription/Area	Task	Agent
Benzene Area	Equipment Survey	Noise

SAMPLING METHODOLOGY

STEL and/or task monitoring for biphenyl and styrene will be conducted using a 3M 3500 passive badge. Samples will be analyzed by the LAD Environmental laboratory in building 3502E.

Monitoring for 1,3-Butadiene, Benzene and DCPD will be done using the 3M 3520 passive badge. Samples will be analyzed by the LAD Environmental laboratory in building 3502E.

Monitoring for 4-VCH will be done using a 1 gram charcoal tube with a battery operated pump calibrated at 500 cc's/minute. Samples will be analyzed by the LAD Environmental laboratory in building 3502E.

Monitoring for nickel carbonyl will be conducted using direct-read Drager tube 0.1/a CH 19501.

Noise monitoring will be conducted using Quest #2700 noise meter which will be calibrated both before and after use at 114 dB with a Quest QC-10 calibrator.

Monitoring & Analytical Guide

A monitoring and analytical guide is located in Section 21 of the IH Manual to assist in the selection of specific agent monitoring criteria.

Next Review Date January, 1996

LHC 3 - PLOT PLAN

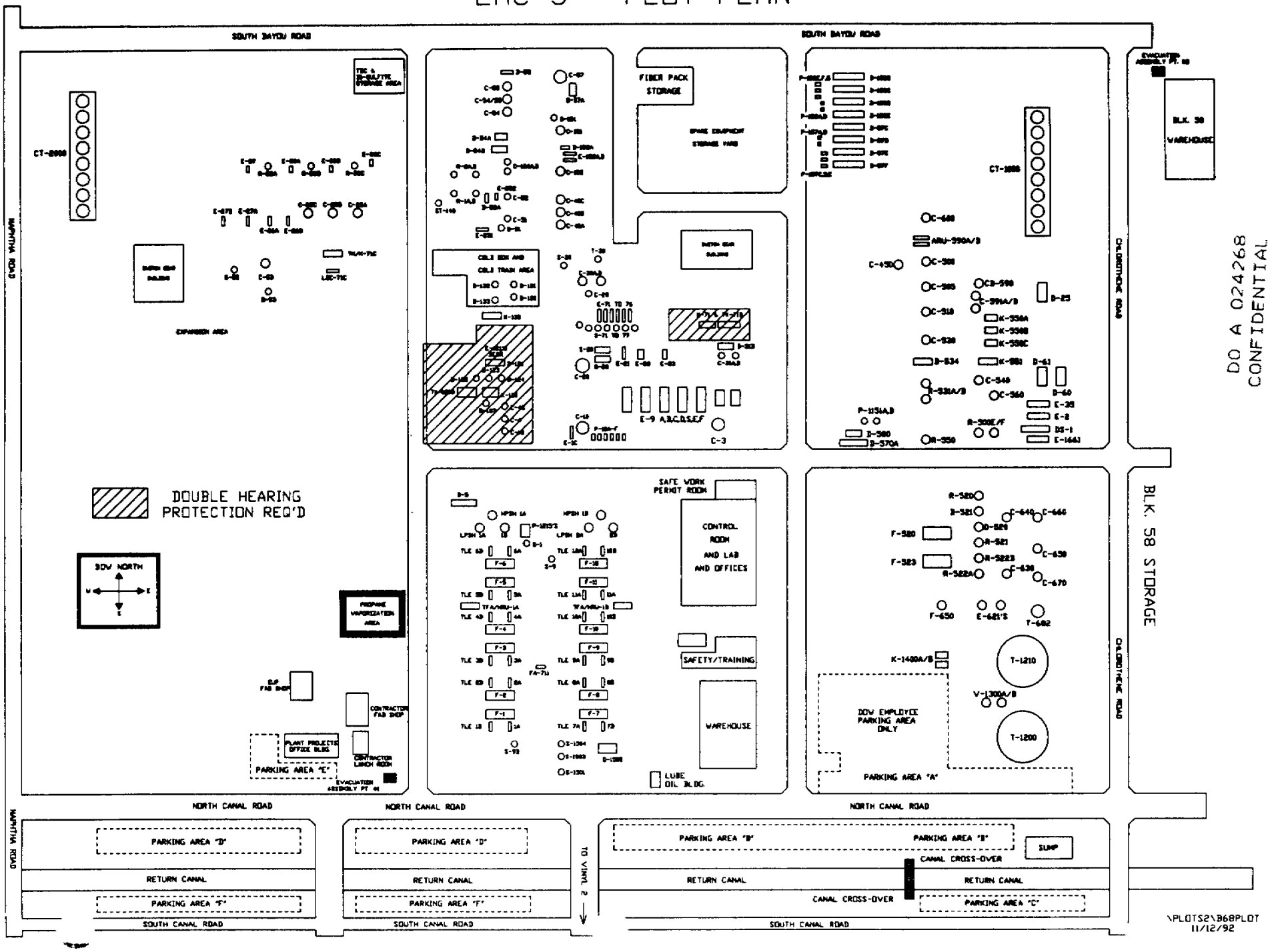

DO A 024268
CONFIDENTIAL

BLK. 58 PLOT PLAN AND FIREWATER AND MONITOR GUN HEADERS

DO A 024269
CONFIDENTIAL

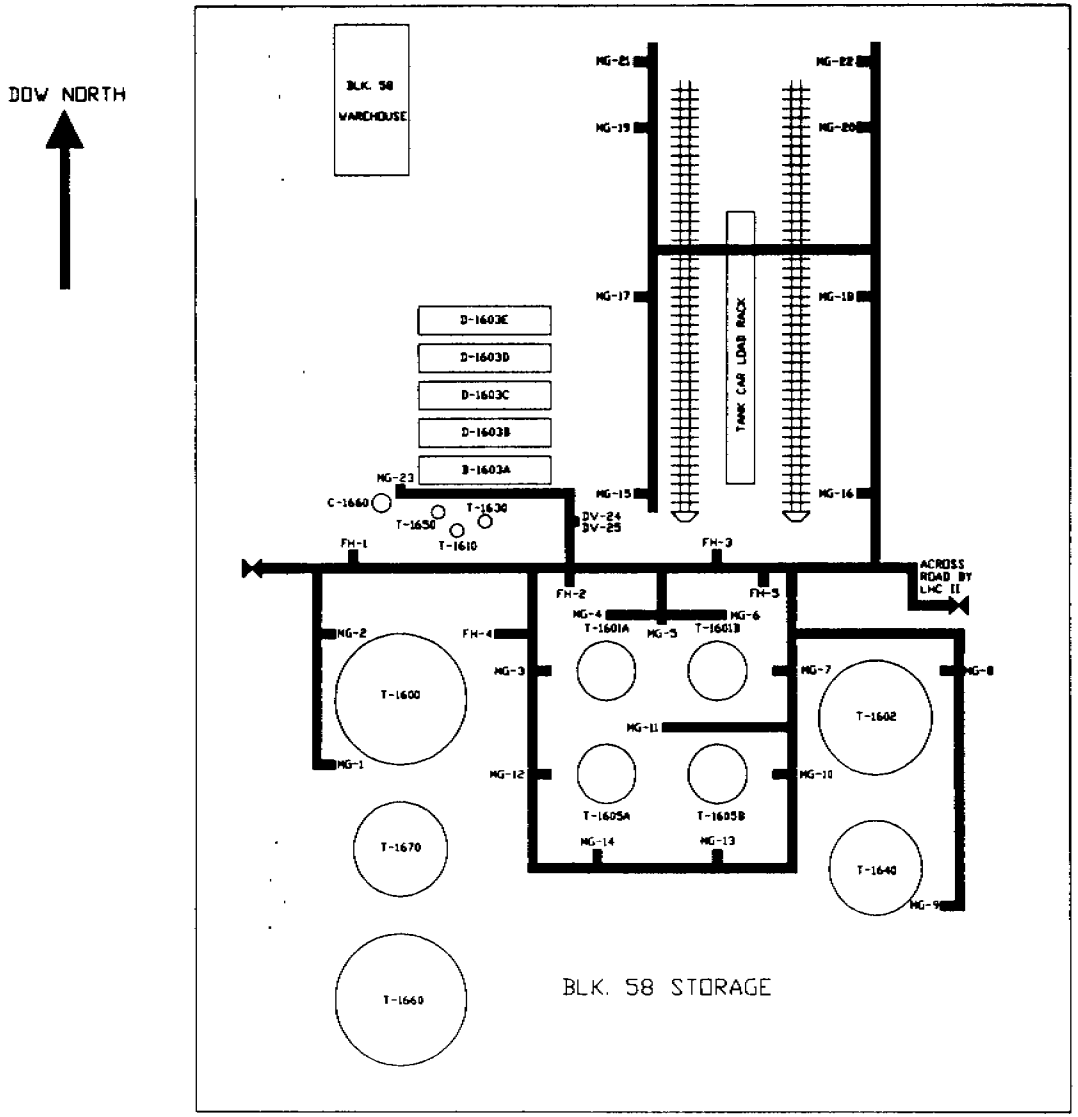

MGBLK58
1/14/92

BLK. 110 PLOT PLAN

DO A 024270
CONFIDENTIAL

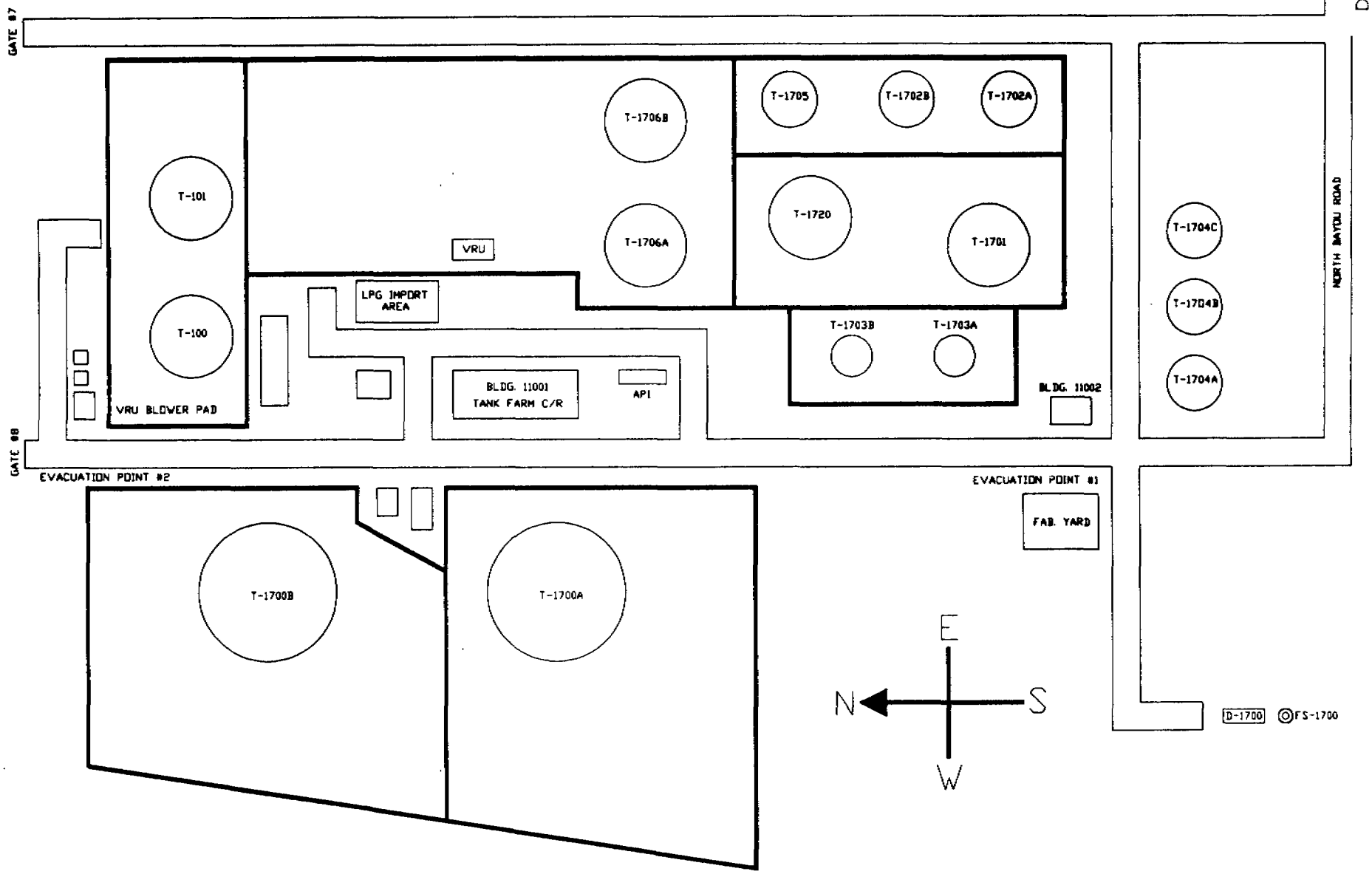

BLK110
1/14/92

LHC-3 ETHYLENE PLANT SIMPLIFIED

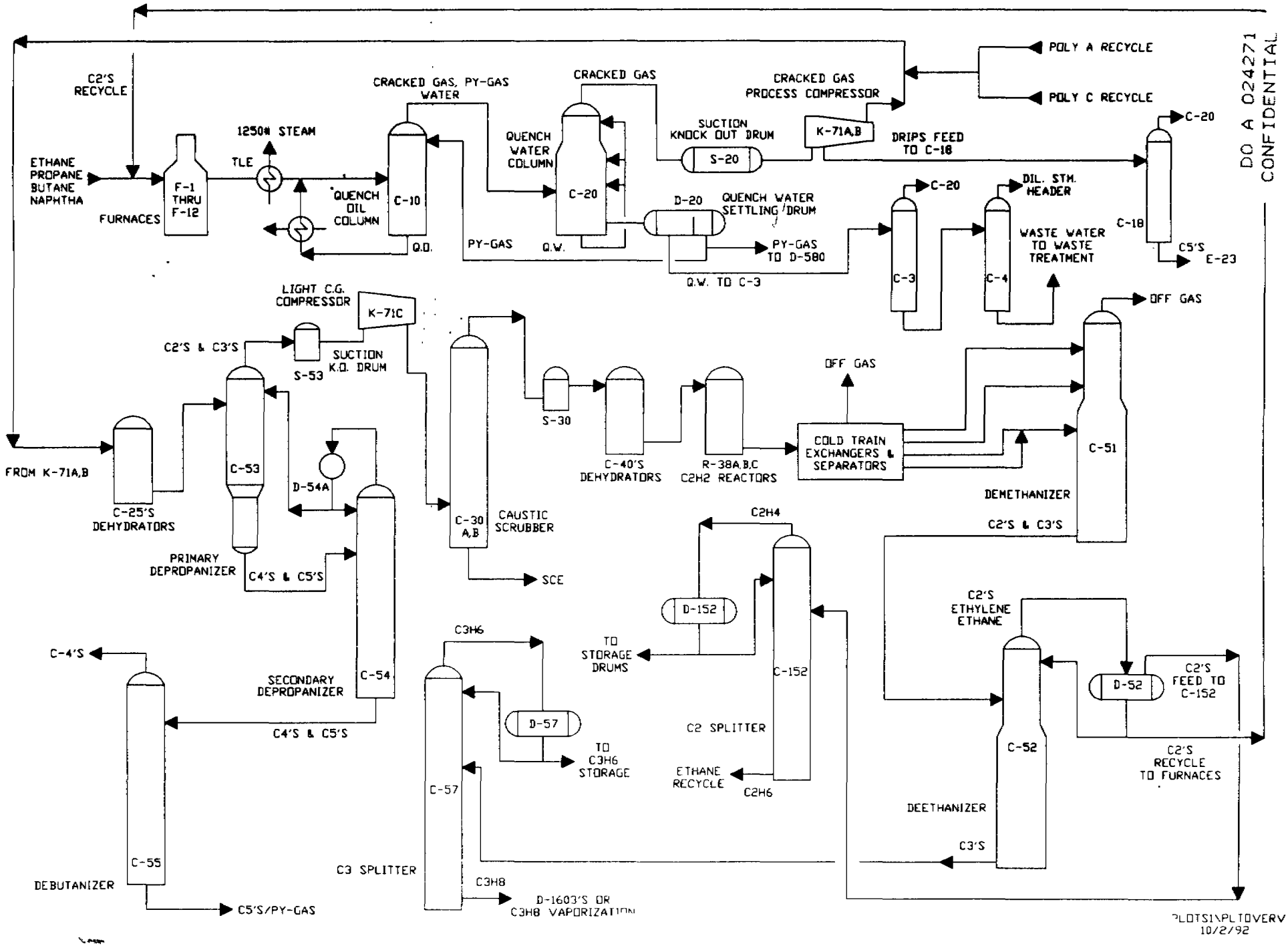

BENZENE PLANT OVERVIEW

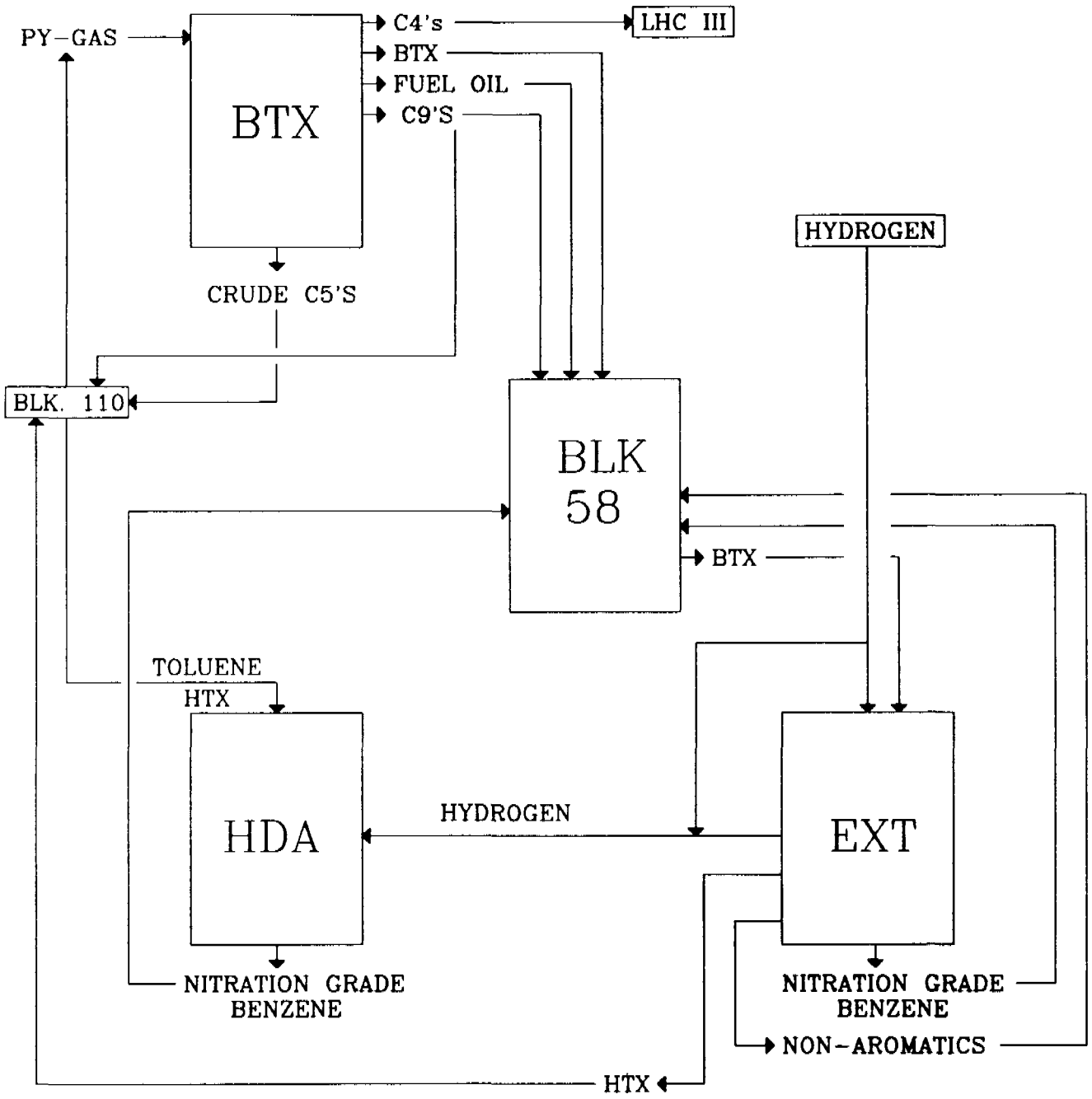

DO A 024272
CONFIDENTIAL

MILLIEN
4/91

MEDICAL SURVEILLANCE TESTING DRAFT

PLANT: L1&C3

Dow Medical Surveillance Requirements which apply to this plant are:
NOISE, BENZENE

OSHA Standards which apply to this plant are:
NOISE, BENZENE

Respirator fit testing is required yes ✓ no ____
If yes, how often: ANNUALLY

Medical surveillance testing for this plant includes the following:

	ANNUALLY	EVERY 2 YEARS
Core Exam		X
Chemistries *		X
CBC *	X	
Urinalysis *		X
Hexachlorobenzene (HCB)		
Audiogram *	X	
Chest Xray		
EKG		At OR NEMC ~~Age 35,45,55,65~~
Pulmonary Function *		X
History Questionnaire *	X	
Dr's. Exam		>45yr
Benzene Questionnaire	X	
Asbestos Questionnaire		
Respirator Medical Approval		X

Exit exam required? yes ____ no X
Other requirements include:
Hemoccult >40yr PSA >45yr (MALE)
tonometry

* included in Core Exam
Updated: 10/92

gdk 9/92

Element 3: Exposure Control

This section contains the following documents:

1. **Written Asbestos Program**
2. **Inventory**
3. **Inspection / Maintenance Program**
4. **Training Documentation**
5. **Asbestos Monitoring Report / Data**
6. **Louisiana Division Requirements for Asbestos Demolition / Renovation Work**
7. **Notification of Demolition or Renovation (NODAR) / ADVF**
8. **Louisiana Division Refractory Ceramics Handling Guidelines**