Jack

PLAINTIFF'S EXHIBIT

ASI-643

EMPIRE BOILER

by

AMERICAN-Standard

INSTALLATION—OPERATION AND MAINTENANCE MANUAL

FOR

TYPE 1-GA GAS FIRED BOILERS

11/55

APPROVED BY AMERICAN GAS ASSOCIATION

Notice to Installer and Operator
This Booklet Must Be Affixed to or Placed in Suitable Pocket on the inside of the Access Panel

AMERICAN-Standard

First in heating . . . first in plumbing

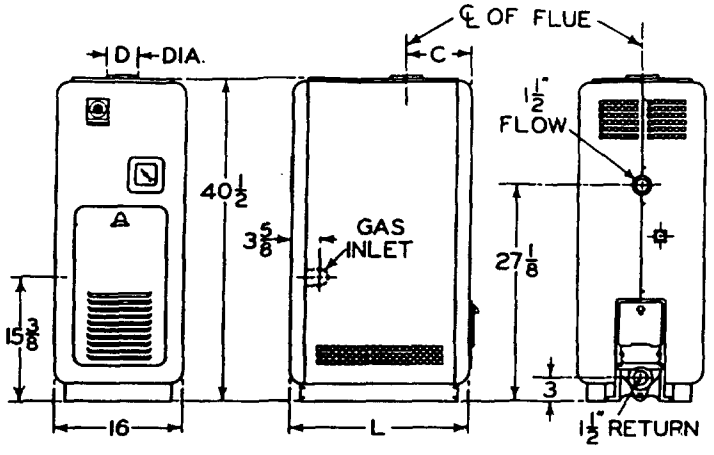

GENERAL DIMENSIONS FOR EMPIRE BOILER

BOILER NUMBER	NO. OF SECTIONS	NO. OF BURNERS	C	D	L
1-GA-4-E	4	1	6⅝	3	19¼
1-GA-5-E	5	1	8⅛	4	22¼
1-GA-6-E	6	1	9⅝	4	25¼

ERECTING

Testing

Before connecting boiler, plug openings, fill boiler with water and subject to not less than 10 lbs. nor more than 30 lbs. pressure. When boiler is used for direct hot water supply, test pressure should be increased up to 120 lbs. Inspect boiler inside and outside for leakage to insure against breakage from handling and shipping. To safeguard accuracy of gage supplied with boiler, do not install gage until after test of boiler. This precaution of testing the boiler will simplify handling of any necessary replacements or adjustments and assist in treating with claims against transportation companies. After test, drain and remove plugs where required.

Caution

On open hot water systems, expansion tank should not be installed in cold or exposed place. No valves of any type should be installed in piping between boiler and expansion tank. Sealing system at any time during operation may cause breakage of boiler or radiators.

Location

If water condition is encountered in basement, or if it has been necessary to water-proof the basement floor, boiler should be mounted on concrete or tile base at least 3" above floor level.

Assembly of Fittings

1. Position boiler section assemblage so that sides with removable cleanout plates are accessible for periodic cleaning. Loosen tie rod nuts so that they are finger tight only.

2. Screw bushing and/or other return fittings into 1½" lower tapping on back section. Provide a drain connection in the return piping at the lowest point in the system.

3. Screw flow fittings into back section.

4. Burner access door frames are alike. Attach one to front section using 1⅛" flat head screws at top. (Fig. 1 shows frame in position.)

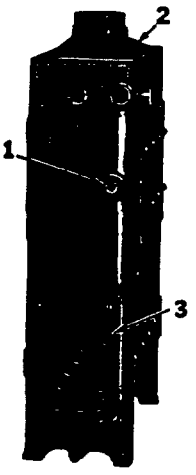

1. Tapping for Reverse Acting Low Limit Control on Back
2. Canopy
3. Burner Access Door Frame

FIG. 1—Section Assemblage

5. Fill putty groove at top of sections with boiler putty and place canopy in position with ribs firmly imbedded in putty to make gas seal. Smooth off excess putty.

Installing Burner and Control Sub-Assemblies

1. Fit burner assembly (Fig. 2) including burner, bracket, pilot burner, thermocouple lead, and vent tube tip to tapered end of mixer with forked lugs engaging lug on mixer. (See Fig. 3.)

For Electric Ignition, the pilot lighter assembly is furnished in separate container. It should be installed before the burner assembly is placed in the boiler. To install the lighter assembly, place it in position with the end of the thermocouple through the hole and push downward until the spring clip engages the bottom of the pilot body. (See Figs. 2 and 3.)

See that air shutter is assembled on mixer. Install burner assembly and mixer in combustion chamber. Place mixer firmly on burner support which should rest on lugs provided on 3rd section. (See Fig. 4.)

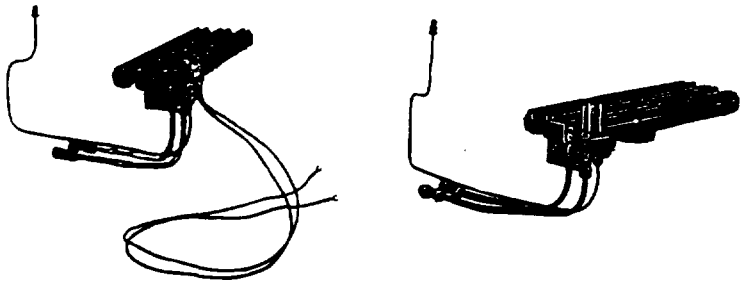

Electric Ignition Manual Ignition

FIG. 2—Burner Sub-Assembly

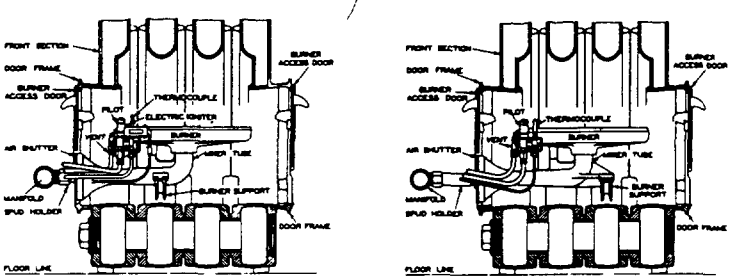

Electric Ignition Manual Ignition

FIG. 3—Cross Section Through Combustion Chamber

2. Attach the manifold and control piping assembly. Be sure that arrows on automatic gas valve, automatic pilot valve and gas pressure regulator point in direction of the gas flow. Check spud in end of spud holder to see that it is screwed in tightly and that orifice is drilled to size specified on tag attached to manifold. Assemble manifold, controls and manifold brackets to front burner access frame. Use ¾" round head screws in upper holes and 1½" round head

screws in lower holes to hold frame to front section. (See Fig. 1.) Be sure spud holder is fitted firmly into mixer tube.

3. Tighten the set screws in manifold brackets. (See Fig. 7).

4. Place front insulation panel in position and hold till temperature bulb is attached. Insert the temperature bulb element of the automatic gas valve in the upper center tapping on the front using the split nut and gland fittings provided. For more sensitive operation, discard well before installing. Attach number and series plate to front insulation panel, also terminal block for boilers having electric ignition.

A ¾" tapping for the application of a reverse acting low limit control has been provided on the back of the rear section. (See Fig. 1).

5. Install combination thermometer and altitude gage in upper tapping on right hand face of front section.

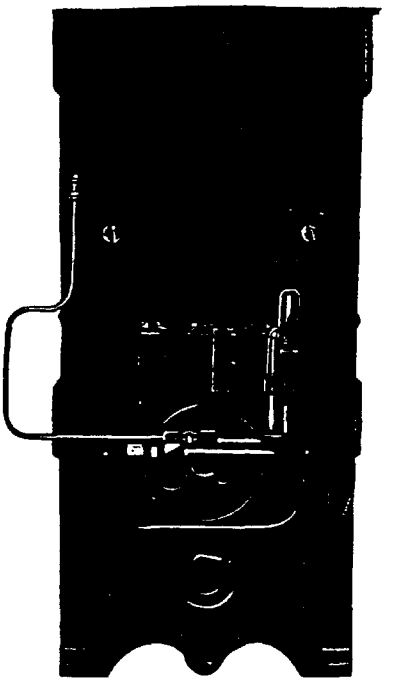

FIG. 4—Burner Installation

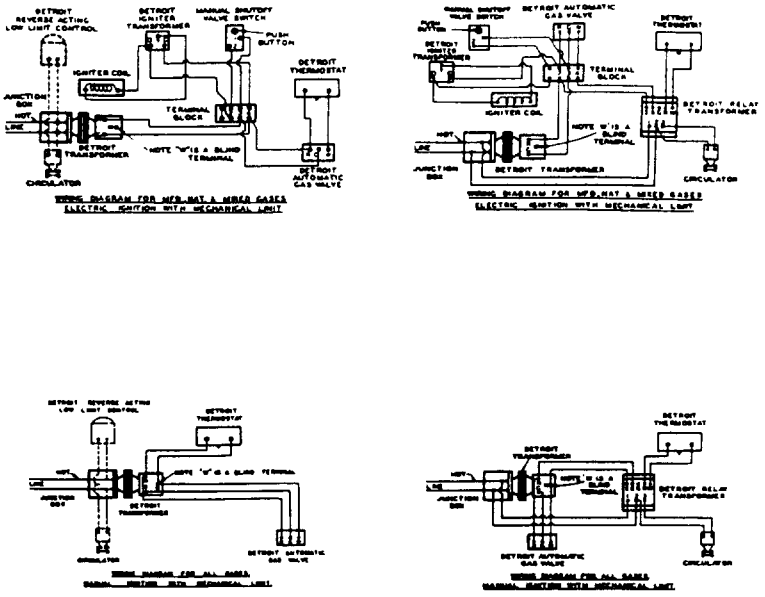

FIG. 5—Wiring Diagrams

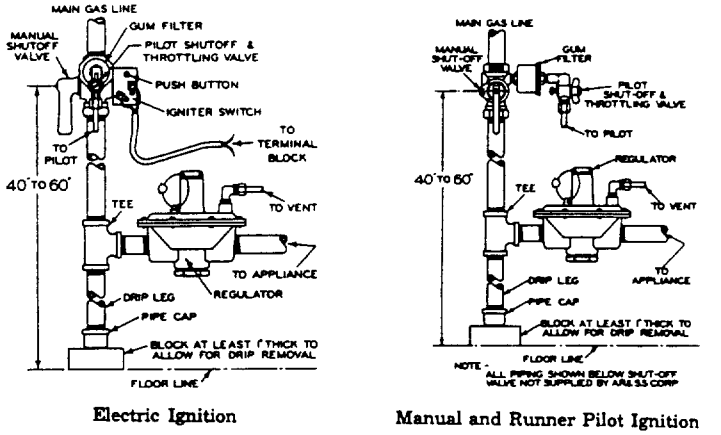

Electric Ignition — Manual and Runner Pilot Ignition

FIG. 6—Supply Piping

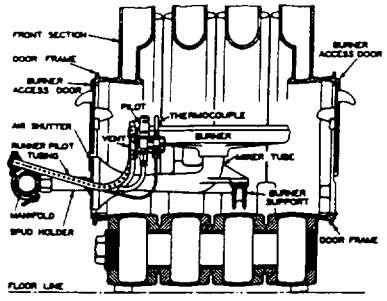

FIG. 7-A.—Runner Pilot Burner Assembly.

NOTE: For complete instructions see supplement.

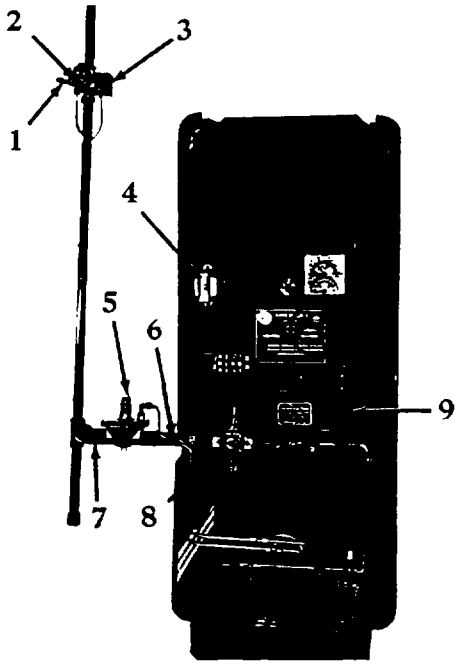

1. Manual Shutoff Valve
2. Pilot Cock
3. Push Button Lighter Switch
4. Pilot Ignition Transformer
5. Gas Pressure Regulator
6. Vent Tube
7. Pilot Line
8. Baso Automatic Pilot Valve
9. Automatic Gas Valve

FIG. 7—Jacket Assembly and Control Connections for Boiler with Electric Ignition

Assembly of Jacket

1. Place rear jacket panel in position. Hold in place and attach rear burner access door frame with 1⅛" flat head screws at top and 1¼" round head screws at bottom.

2. Place side jacket panels in position with grooved edges engaging flanges of rear panel. Attach side panels to rear panel at top and bottom with screws and nuts.

Connecting Controls

1. Connect thermocouple element from pilot burner to BASO automatic pilot valve. (See Fig. 7).

2. Connect pilot line to manual shutoff valve (Fig. 6 for Mfd., Nat. and Mixed Gases) and to BASO automatic pilot valve for L.P. and L.P.—Air gases. (See Figs. 12 and 13).

For electric ignition, connect pilot lines from burner assembly (Fig. 2) to push button assembly (Fig. 6) as shown in Fig. 7.

For Runner Pilot connect pilot lines as shown in Fig. 6 and 7-A. See supplementary instruction sheet.

3. Connect vent tube from pilot burner bracket to gas pressure regulator. Be sure stainless steel tip is screwed in securely; and that flame check is in place in vent tube connection on regulator. (See Fig. 8).

4. Make wiring connections according to wiring diagram applying to controls used. (See Fig. 5). Install thermostat and connect as indicated.

5. Install front and rear burner access doors.

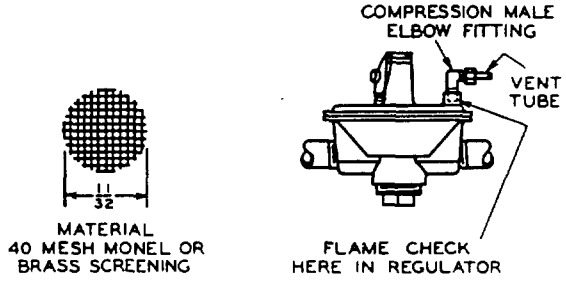

FIG. 8—Flame Check

Completing Jacket Assembly

1. Place front jacket panel in position so that flanges engage grooves of side panels. Fasten at top and bottom with screws and nuts. (See Fig. 9). Install Lighting Instructions Plate by placing it on "Z" clips located inside the control access door and bending down six tabs to secure. Attach control access door.

2. Place draft hood on flue outlet of canopy.

3. Place top jacket panel in position over flue outlet of draft hood with perforations to front over controls.

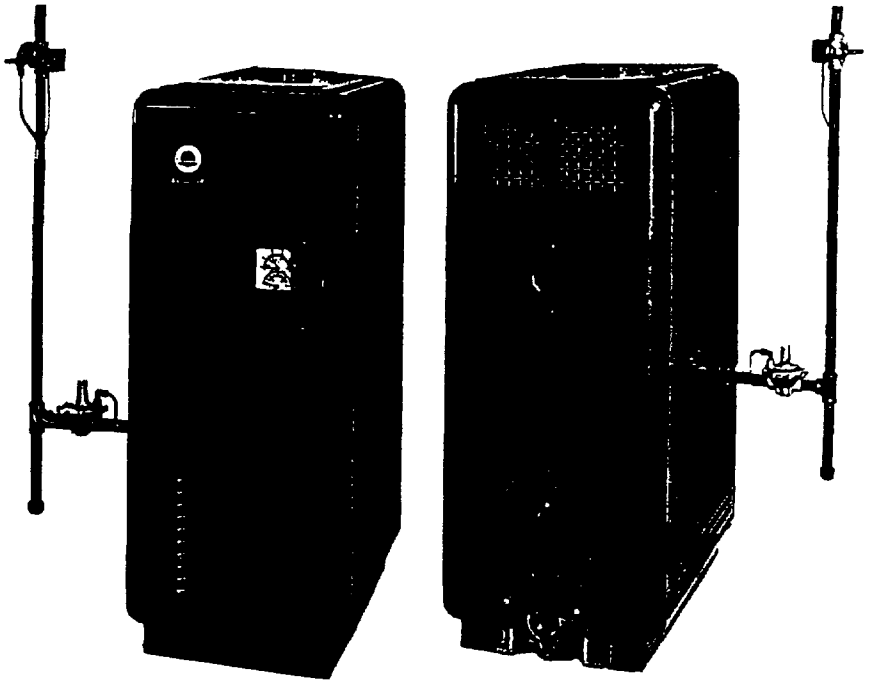

Front Rear

FIG. 9—Empire Boiler Assembled

Filling System

Caution: Never start boiler unless it is properly filled. (After boiler is in operation, makeup water should be added slowly.)

Fill open system to ⅓ height of expansion tank, remove rim and glass from gage and set movable pointer under automatic pointer. Replace rim and glass.

Fill closed system until relief valve relieves. This must be less than 30 pounds pressure. If necessary, adjust relief valve setting. Remove rim and glass from gage and set movable pointer under automatic pointer. Replace rim and glass.

Keep system filled. Pointers on gage should be even. If pressure exceeds 30 lbs., relieve at once by opening relief valve or drain cock.

Pilot Adjustment

Light boiler as directed in operating instructions and check for gas leaks. Adjust pilot flame to extend just over top of burner. Pilot rate can be adjusted with screw underneath cap on pilot cock or by adjusting throttling cock in pilot line if provided.

Normal Pilot Input for BASO Pilot Burners

	Mfd.	Nat.	Mixed	L.P.	L.P.-Air
Input Per pilot Burner Btu/Hr.	1000	1400	1200	1000	1000

Main Burner Input Adjustment

After boiler is warmed up, shut off all other gas appliances connected to gas meter and time gas consumption. Adjust gas pressure regulator to give rated input indicated on name plate.

$$\text{Gas Consumption (Cubic Feet per Hr.)} = \frac{\text{Input Rating (Btu per Hr.)}}{\text{Heating Value Gas (Btu per Cu. Ft.)}}$$

To increase consumption, turn adjustment screw (beneath cap on pressure regulator) clockwise; to decrease, turn screw counterclockwise.

Main Burner Primary Air Adjustment

Adjust burner flame by opening or closing primary air shutter. Flame should burn quietly, show no yellow and should have a noticeable inner blue cone. After adjustment, tighten screw to lock shutter in position.

OPERATING

Shutting Off (For All Gases)

1. Close manual shutoff valve and pilot cock.
2. Turn off switch in electric line to appliance.

Re-Lighting (Electric Ignition)

1. Set thermostat at lowest temperature.
2. Close manual shutoff valve and pilot cock.
3. Turn off switch in electric line to appliance.
4. Wait 5 minutes.
5. Turn on switch in electric line to appliance.
6. Open pilot cock.
7. Press button on lighter switch until pilot burner lights.

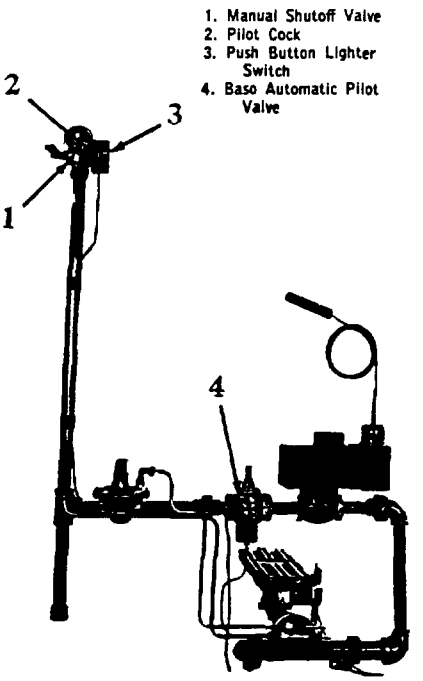

FIG. 10—Control Arrangement

8. Wait 2 minutes.
9. Press plunger on automatic pilot valve.
10. Open manual shutoff valve.
11. Set thermostat at desired temperature.

Re-Lighting (Manual Ignition; Mfd., Nat. & Mixed Gases)

1. Set thermostat at lowest temperature.
2. Close manual shutoff valve and pilot cock.
3. Turn off switch in electric line to appliance.
4. Wait 5 minutes.
5. Open burner access door.
6. Light taper and hold to pilot burner.
7. Open pilot cock. (Pilot should light.)
8. Close burner access door.
9. Wait 2 minutes.
10. Press plunger on automatic pilot valve.
11. Open manual shutoff valve.
12. Turn on switch in electric line to appliance.
13. Set thermostat at desired temperature.

1. Manual Shutoff Valve
2. Pilot Cock
3. Baso Automatic Pilot Valve
4. Pilot Burner

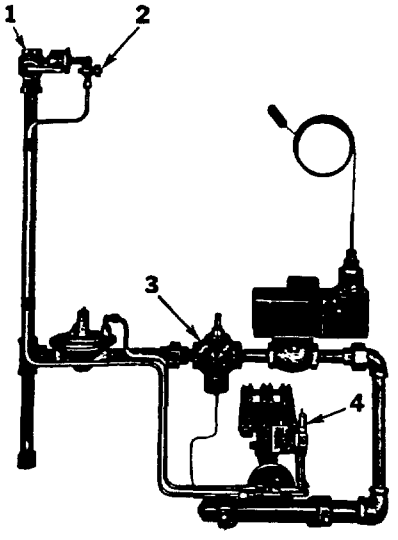

FIG. 11—Control Arrangement

Re-Lighting (Manual Ignition; Liquefied Petroleum and L.P.-Air Gases)

1. Set thermostat at lowest temperature.
2. Close manual shutoff valve and pilot cock.
3. Turn off switch in electric line to appliance.
4. Wait 5 minutes.
5. Open burner access door.
6. Open pilot cock.
7. Light taper and hold to pilot burner.
8. Press plunger on automatic pilot valve (Pilot should light). Hold 2 minutes.
9. Close burner access door.
10. Open manual shutoff valve.
11. Turn on switch in electric line to appliance.
12. Set thermostat at desired temperature.

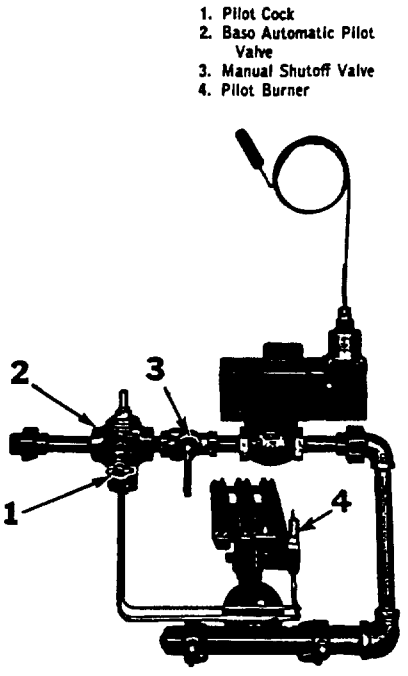

FIG. 12—Control Arrangement for LP Gas (See page 13 for LP—Air Gas Controls).

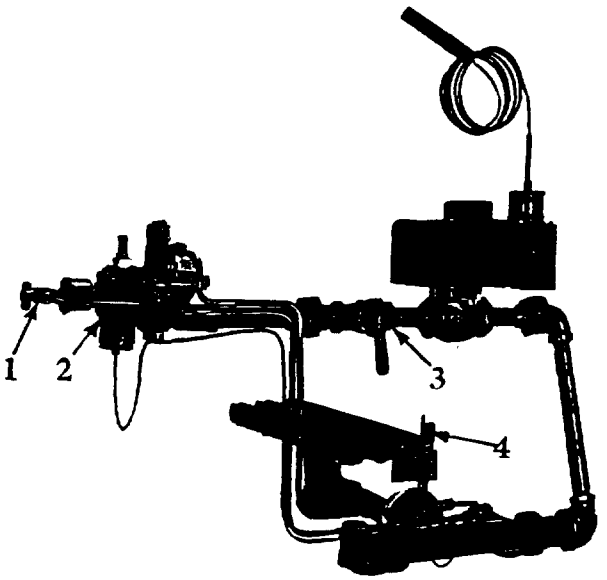

1. Pilot Cock
2. Baso Automatic Pilot Valve
3. Manual Shutoff Valve
4. Pilot Burner

FIG. 13—Control Arrangement for LP—Air

Pilot Goes Out

If the pilot flame is extinguished, the automatic pilot will shut off the automatic gas valve, rendering the boiler inoperative. Relight according to applicable instructions. If boiler is not operating correctly, call Heating Contractor or Gas Company Service man.

Operation During Failure of Electric Power Supply

In case of failure of supply of electric current, boiler will automatically shut off. Boiler will not operate automatically while electric power is off; however, boilers equipped with Detroit V-574-FW automatic gas valve may be operated manually as follows:

1. *If pilot is out,* relight as directed for manual ignition.
2. Remove rectangular housing from top of valve.
3. Pull up knob located on top. (Burners should light.)
4. Caution—Shut off boiler by pressing reset lever, located next to knob, before water temperature becomes excessive.

Bear in mind that operating the boiler manually is an emergency condition and that constant supervision is required to prevent the possibility of damage due to overheating. Never allow the boiler to operate under this emergency condition if it is to be left unsupervised for any length of time.

5. Valve is fully recycling and will return to automatic operation when electric power returns.

CARE AND ATTENTION

In Fall Before Starting Boiler

Drain system sufficiently to remove sludge in bottom of boiler. Do not drain more water than necessary to remove sludge. Then refill to proper level as directed on page 8.

Care of Boiler While in Operation

1. Check water level regularly and add water slowly when needed.
2. This boiler is fired automatically.

In Winter While Not in Operation

Drain entire system to prevent damage from freezing. Drain through drain cock, located at lowest point in system. Be sure boiler is completely drained.

In Summer While Not in Operation

Fill system as during heating season. Have boiler inspected by service man before the start of the heating season. If necessary, remove jacket front and side panels so that clean out cover plates are accessible. These may be removed from either side of the boiler for cleaning between the sections.

General Care of Heating System

1. Keep radiators and convectors clean.
2. Keep system in good repair. It is advisable to have it inspected by your heating contractor at least once a year.
3. If a hot water radiator is hot at the bottom, but not at the top, it indicates that air has accumulated inside and should be vented. To vent radiator: Hold small cup under air vent (located near top of radiator), open vent until water escapes and then close.
4. Fill hot water systems as follows:

   Open all radiator valves, but keep vents at top of radiator closed. Fill open systems till hands on altitude gage are even. If it is a closed system the water filling will stop automatically when proper pressure is reached. (Pressure should not exceed 30 pounds.) Then, beginning with ground floor, vent each radiator as directed above. It may be necessary to add water during this operation to expel air from higher radiators.
5. If much water is added to system, it is advisable to heat system to a high temperature and vent again. This will make less venting necessary during the winter.

6. Where an expansion tank is used, make sure that neither the tank nor its drain pipe is exposed to freezing temperatures. Never place valves in piping leading to or from expansion tank.

NOTE: All parts of this boiler have been carefully inspected and packed. See Packing and Parts List sheet for details.
In case of shortage, make sure that all parts have been removed from shipping container and examine packing material thoroughly. If part cannot be found, report shortage to your dealer, giving boiler size, series number, date, inspector's number and packer's number.

GIVE BOILER SIZE AND SERIES NUMBER WHEN ORDERING REPAIR PARTS.

Boiler Size.....

Series No. (See Series Plate on Boiler).....

Date .....

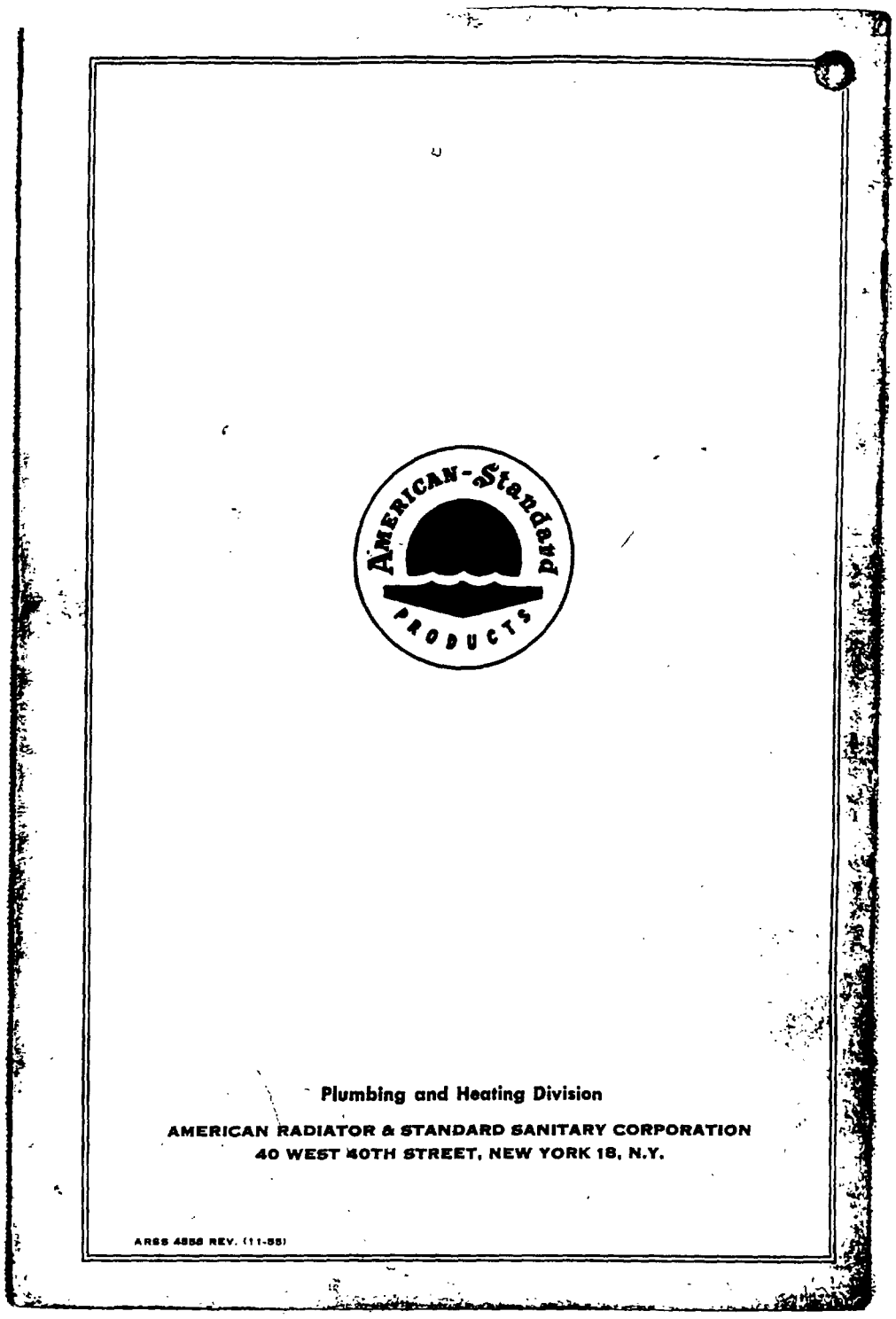

Plumbing and Heating Division

AMERICAN RADIATOR & STANDARD SANITARY CORPORATION
40 WEST 40TH STREET, NEW YORK 18, N.Y.

ARSS 4858 REV. (11-55)

18623