# AMERICAN GAS BOILERS

## EMPIRE AND STANDARD

**TYPES 1-G-E AND 1-G**

## FOR STEAM AND HOT WATER

PLAINTIFF'S EXHIBIT

ASI-1172

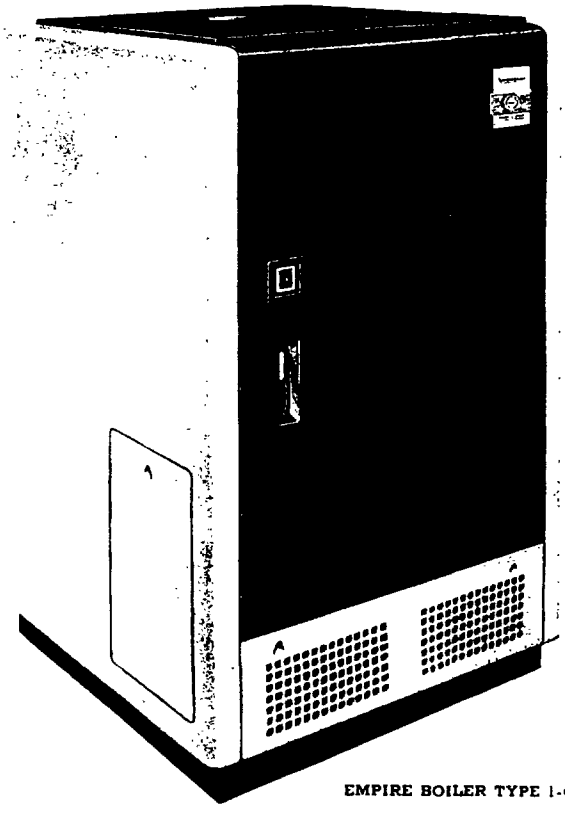

EMPIRE BOILER TYPE 1-G-E

AMERICAN RADIATOR & Standard Sanitary CORPORATION

12860

# EMPIRE and STANDARD GAS BOILERS

## FOR EFFICIENCY AND BEAUTY

If you seek both beauty and efficiency, the Empire Gas Boiler (see front cover) is perfect. Its rich, colorful Jacket is finished in Canyon Two-Tone Red, suede texture. It is so handsome and beautiful it blends with the finest modern basement and appointments. All controls are concealed beneath the smart exterior, out of sight, out of the way, but available in an instant when necessary.

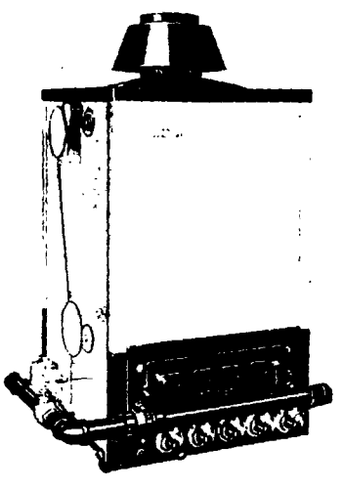

STANDARD BOILER TYPE 1-G

## WHERE APPEARANCE IS SECONDARY

If you have a separate boiler room, or if appearances are unimportant the Standard Gas Boiler (see illustration above) will fill all requirements. For it is identical with the Empire except it does not include the all-over Canyon Two-Tone Red Jacket, and the controls are on the outside of the boiler.

Look for this Distinctive Name Plate

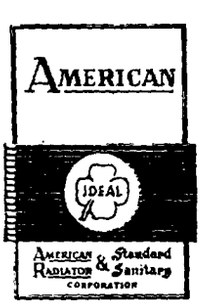


## SCIENTIFIC DESIGN

American Gas Boilers have been designed by Gas heating experts. They embody the latest developments in the field. Specially designed for Gas operation only they get all the good out of every cubic foot of gas. Safe, sure and silent in operation they are designed for a lifetime of trouble-free, economical service.

## THERMOTOR THROTTLING VALVE

This special Valve is controlled by the thermostat. It gradually reduces or increases gas flow to the burner to keep room temperature just right. It keeps gas consumption to a minimum, and combined with the thermostat eliminates the need for manual work to keep constant comfort in the house.

## CAREFREE COMFORT

Both the Empire and Standard Gas Boilers offer you heating that's so automatic you don't even have to order fuel! The thermostat, the special Thermotor Throttling Valve and other quality controls guard the temperature you want with precision accuracy. Clean, quiet and odorless in operation, these Boilers have brought the blessings of automatic heating comfort to thousands of homes — and won the lasting approval of homeowners.

## HEAVY INSULATION

A thick layer of Air-Cell Asbestos Insulation prevents excess heat loss into the basement. This also aids in reducing operating costs and keeps the jacket cooler.

## EASY TIME PAYMENTS

If you are modernizing, it is not necessary to pay for a new Empire or Standard Gas Boiler all at once. Easy time payments can be quickly and simply arranged. They can be planned so that monthly payments will be fully in accord with your budget — no matter how big or small.

## SHORT FORM SPECIFICATIONS

**(For All Boilers)**

In general the following form will be found adequate: "Furnish and install according to manufacturer's instructions, where shown on the plans a Type 1-G-? American Standard (or Empire) Steam (or Water) Gas Boiler with an A.G.A. output rating of ..... sq. ft. of radiation. The boiler shall be manufactured by the American Radiator & Standard Sanitary Corporation and shall be completely equipped with Type 10-MT Equipment consisting of .... (list items of equipment as indicated on opposite page)

This may be supplemented with paragraphs governing installation of gas supply, piping, connections, tests, etc., as required.

12861

# EMPIRE BOILER CONSTRUCTION FEATURES

1. JACKET — handsomely finished in new Canyon Two-Tone Red — suede finish.

2. STEAM FLOW — a correctly and specially designed steam supply line pipe fitting.

3. THICK ASBESTOS AIR-CELL INSULATION effectively prevents excess heat loss from boiler.

4. LOW WATER CUT-OFF — on steam boiler only. Completely shuts off gas supply to main burners if water line reaches a low point.

5. THERMOTOR THROTTLING VALVE — operated from the room thermostat. Completely shuts off supply of gas to main burners when desired room temperature has been obtained. All control functions centered in one valve. A throttling valve embodying mechanical limit control.

6. STEAM PRESSURE OR WATER TEMPERATURE REGULATION — controls supply of gas to burners according to predetermined steam pressure or water temperature.

7. GAS SUPPLY LINE — ample size, permits unrestricted supply of gas. Gas Pressure Governor included, mounted outside jacket at rear.

8. BURNER COCK — specially designed to permit smooth flow of gas with minimum friction.

9. THERMOSTATIC PILOT — protected from moisture or dirt. Keeps gas supply valve closed unless pilot is burning.

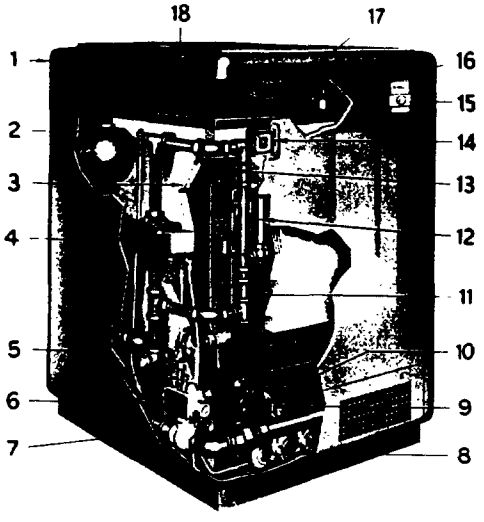


*Cutaway View*

10. QUIET BURNERS — raised drilled ports. Blue flame burner. Quiet in operation.

11. CLEAN-OUT OPENING — provides easy access for cleaning flue surfaces of sections.

12. WATER COLUMN — on steam boilers only. Artistically framed within jacket giving protection against breakage and adding to the beauty of the gas boiler.

13. METAL-TO-METAL JOINT — ground, gas-tight. No cement or putty used. Patented pin type cast iron section. The most effective type of cast iron heat-absorbing surface. Rapidly and efficiently absorbs the heat from the rising columns of hot gases, transferring heat to water within boiler.

14. COMPOUND PRESSURE AND VACUUM GAUGE — on steam boiler. On water boiler, combination altitude gauge and thermometer located here.

15. DISTINCTIVE NAME PLATE — "AMERICAN", the best known name in heating.

16. POP SAFETY VALVE — A. S. M. E. standard. Fully enclosed in jacket.

17. DRAFT HOOD — fully enclosed. Acid-proof vitreous enamel on ARMCO iron. Prevents either excessive drafts or down-drafts from affecting proper combustion.

18. CANOPY — acid-proof vitreous enamel on ARMCO iron set in putty-filled groove forming gas-tight joint.

# STANDARD BOILER CONSTRUCTION FEATURES

1. CANOPY — acid-proof vitreous enamel on ARMCO iron, set in putty-filled groove, forming perfect gas-tight joint.

2. COMPOUND PRESSURE AND VACUUM GAUGE — Steam: On water boiler, combination altitude gauge and thermometer located here.

3 STEAM CONNECTION — leads from steam dome of boiler to diaphragm of main throttling valve

4. RESETTING LOW WATER CUT-OFF — completely shuts off supply of gas to main burners if the water line on steam boiler reaches a low point.

5. GAS VALVE — electrically operated from room thermostat. Steam Pressure or Water Temperature throttles gas flow to maintain required conditions. Upper limit and manual control also embodied in same valve.

6. GAS PRESSURE GOVERNOR — maintains gas pressure at a fixed maximum.

7. GAS SUPPLY LINE — ample size, provides unrestricted supply of gas.

8. STEAM DIAPHRAGM — steam from dome actuates diaphragm, throttling gas when desired steam pressure is reached. On water boilers, we furnish at this point an accurate water temperature control device which is readily adjustable and similarly throttles the gas flow when the water in the boiler reaches the desired temperature.

9. QUIET BURNERS — raised drilled ports. Blue flame, atmospheric type, quiet in operation.

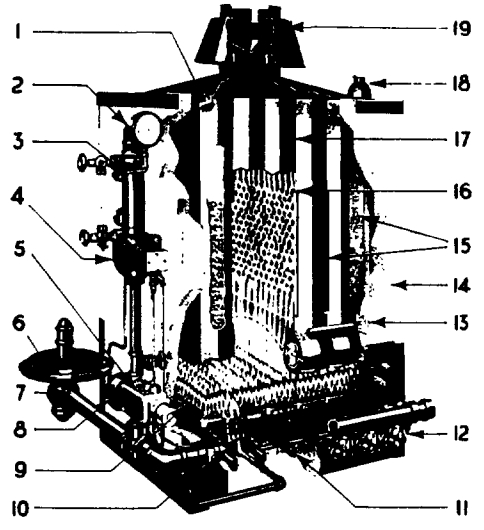


*Cutaway View*

10. THERMOSTATIC PILOT - Operates thermotor valve mechanically, keeping this valve closed unless pilot is burning properly.

11 VENTURI MIXER TUBE - induces proper velocity to gas and primary air, and obtains the correct mixture of gas and air.

12. BURNER COCK - specially designed to permit smooth flow of gas with minimum friction.

13. JACKET INSULATION - heavy asbestos air-cell effectively prevents excess heat loss from boiler.

14. JACKET - baked enamel on both sides. Black enamel trimmings.

15. CLEANOUT OPENING — provides easy access for cleaning flue surfaces of sections.

16. PATENTED PINTYPE CAST IRON SECTION — the most effective type of cast iron heat-absorbing surface. Rapidly and efficiently absorbs the heat from the rising columns of hot gases, and transfers this heat to the water within

17. METAL-TO-METAL JOINT — ground, gas-tight. No cement or putty used.

18. POP SAFETY VALVE — A.S.M.E. standard

19. DRAFT HOOD — acid-proof vitreous enamel on ARMCO iron. Prevents either excessive drafts or down-drafts from affecting proper combustion.

"10-MT" EQUIPMENT INCLUDES THE FOLLOWING.
STEAM: Thermotor Throttling Valve with Thermo-Pilot (566-VS), Steam Pressure Regulator, Resetting Low Water Cut-Off (620), Gas Pressure Governor, Compound Steam Gauge; Pop Safety Valve; Boiler Drain and Pilot Cock; Insulated Enameled Jacket, Vitreous Enameled Draft Diverter.
WATER: Thermotor Throttling Valve with Thermo-Pilot (566-VW); Water Temperature Regulator, Gas Pressure Governor, Combination Altitude Gauge and Thermometer; Boiler Drain and Pilot Cocks, Insulated Enameled Jacket; Vitreous Enameled Draft Diverter
Note The 566-V Thermotor Valve with Transformer is electrically operated by room thermostat. For use with any 2-wire Thermostat or any 3-wire, Series 10, Thermostat (with or without clock) for automatic room temperature regulation. The 556-V also includes Thermo-Pilot, throttling and mechanical upper limit control.

# RATINGS AND DIMENSIONS — STEAM AND WATER

## EMPIRE BOILER TYPE 1-G-E

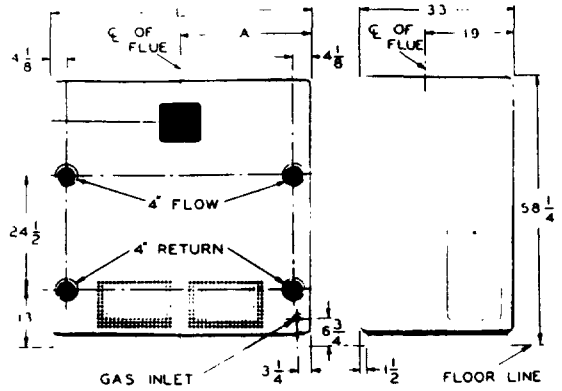


| Boiler No | A.G.A. Steam Rating Sq. Ft. | *Supplies Installed Radiation Sq. Ft. | A.G.A. Water Rating Sq. Ft. | *Supplies Installed Sq. Ft. 150 Btu | *Supplies Installed Sq. Ft. 200 Btu | A | L | Diam. Flue | Gas Conn. | Number & Size Tapping Flow | Number & Size Tapping Return |
|---|---|---|---|---|---|---|---|---|---|---|---|
| 1-G- 4-E | 610 | 400 | 980 | 643 | 482 | 16 | 32 | 6 | 1¼ | 2-4 | 2-4 |
| 1-G- 5-E | 775 | 513 | 1240 | 820 | 615 | 18 | 36 | 7 | 1¼ | 2-4 | 2-4 |
| 1-G- 6-E | 940 | 627 | 1500 | 1000 | 750 | 20 | 40 | 8 | 1¼ | 2-4 | 2-4 |
| 1-G- 7-E | 1105 | 743 | 1770 | 1190 | 893 | 22 | 44 | 8 | 1½ | 2-4 | 2-4 |
| 1-G- 8-E | 1270 | 859 | 2030 | 1373 | 1030 | 24 | 48 | 8 | 1½ | 2-4 | 2-4 |
| 1-G- 9-E | 1435 | 978 | 2300 | 1567 | 1175 | 26 | 52 | 9 | 2 | 2-4 | 2-4 |
| 1-G-10-E | 1600 | 1097 | 2560 | 1755 | 1316 | 28 | 56 | 9 | 2 | 2-4 | 2-4 |

## STANDARD BOILER TYPE 1-G

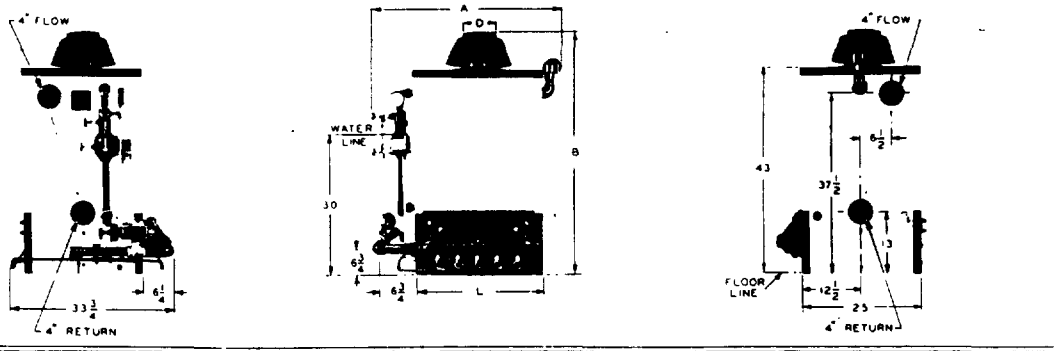


| Boiler No | A.G.A. Steam Rating Sq. Ft. | *Supplies Installed Radiation Sq. Ft. | A.G.A. Water Rating Sq. Ft. | *Supplies Installed Sq. Ft. 150 Btu | *Supplies Installed Sq. Ft. 200 Btu. | L | A** | B | D (Diam Flue) | Gas Connector | Number & Size Tapping Flow | Number & Size Tapping Return |
|---|---|---|---|---|---|---|---|---|---|---|---|---|
| 1-G- 4 | 610 | 400 | 980 | 643 | 482 | 19 | 35 | 50½ | 6 | 1¼ | 2-4 | 2-4 |
| 1-G- 5 | 775 | 513 | 1240 | 820 | 615 | 23 | 39 | 53 | 7 | 1¼ | 2-4 | 2-4 |
| 1-G- 6 | 940 | 627 | 1500 | 1000 | 750 | 27 | 43 | 53½ | 8 | 1¼ | 2-4 | 2-4 |
| 1-G- 7 | 1105 | 743 | 1770 | 1190 | 893 | 31 | 47 | 54 | 8 | 1½ | 2-4 | 2-4 |
| 1-G- 8 | 1270 | 859 | 2030 | 1373 | 1030 | 35 | 51 | 55 | 8 | 1½ | 2-4 | 2-4 |
| 1-G- 9 | 1435 | 978 | 2300 | 1567 | 1175 | 39 | 55 | 56 | 9 | 2 | 2-4 | 2-4 |
| 1-G-10 | 1600 | 1097 | 2560 | 1755 | 1316 | 43 | 59 | 58½ | 9 | 2 | 2-4 | 2-4 |
| 1-G-11 | 1765 | 1217 | 2820 | 1915 | 1459 | 47 | 63 | 59 | 10 | 2 | 2-4 | 2-4 |

* Ratings listed under "Supplies Installed" include a suitable allowance for normal piping and pickup. This rating is shown computed on the basis of 150 Btu. and 200 Btu. per square foot per hour emission for water boilers and 240 Btu. per square foot per hour for steam boilers. Note: All dimensions are in inches.
** For steam boiler. Water boiler is 4" shorter.

12863

AMERICAN RADIATOR & Standard Sanitary
New York CORPORATION Pittsburgh

Form No. 7029-35M-6-41 Graphic

Printed in U. S. A.