FORD *Service Handbook* 2002

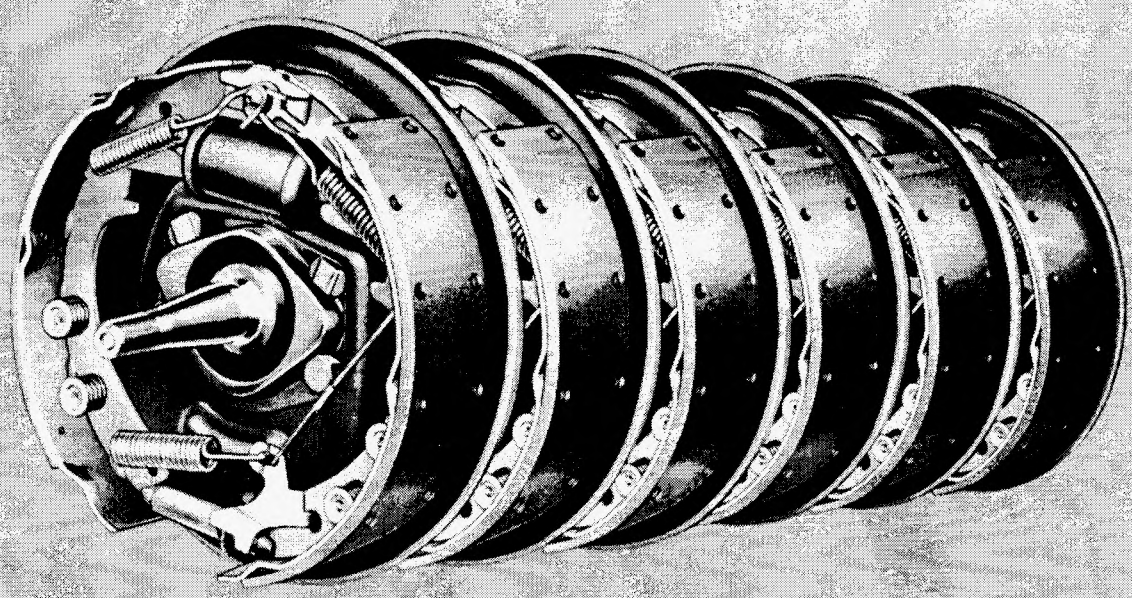

BRAKES

CAR, ECONOLINE, 100-400 SERIES TRUCKS

table of contents

	Page
PART 1 IDENTIFICATION	1
PART 2 GENERAL REPAIR	9
1. Hydraulic Brake Repair	9
Master Cylinder	9
Hydraulic Line Replacement	13
Brake Pedal Replacement and Adjustment	13
Brake Shoe, Adjusting Screw, and Lining	17
Brake Cylinder Replacement	22
Brake Cylinder Overhaul	22
Brake Carrier Plate Replacement	23
2. Parking Brake Repair	25
Pedal Assembly Replacement (Galaxie and Thunderbird)	25
Control Handle Assembly Replacement (Fairlane)	25
Parking Brake Cable Adjustment (Fairlane)	26
Handle Assembly Replacement (Falcon)	26
Parking Brake Cable Adjustment (Falcon)	26
Handle Assembly Replacement (Econoline)	27
Parking Brake Cable Adjustment (Econoline)	27
Handle Assembly Replacement (F-100, F-250)	27
Parking Brake Adjustment (Trucks)	28
Equalizer to Pedal Cable Replacement (Galaxie)	28
Equalizer to Pedal Cable Replacement (Thunderbird)	29
Equalizer to Pedal Cable Replacement (Falcon)	29
Equalizer to Pedal Cable Replacement (Fairlane)	29
Equalizer to Handle Cable Replacement (Econoline)	30
Equalizer to Handle Cable Replacement (F-100, F-250, P-100, P-350)	30
Equalizer to Handle Cable Replacement (Galaxie, Thunderbird, and F-100, F-250, P-100, and P-350 Trucks)	30
Equalizer to Rear Wheel Cable Replacement (Fairlane, Falcon, Econoline)	31
Band-Type Parking Brake (F-350, P-350, and P-400 Trucks)	31
3. Power Brake Repair—Cars	32
Power Unit Replacement (Fairlane and Galaxie)	32
Power Unit Replacement (Thunderbird)	33
Power Unit Overhaul	33
4. Power Brake Repair—Trucks	37
Booster Replacement	37
Booster Overhaul	38
PART 3 SPECIFICATIONS	42

The descriptions and specifications in this handbook were in effect at the time the handbook was approved for printing. Ford Division of Ford Motor Company reserves the right to discontinue models at any time, or change specifications or design, without notice and without incurring obligation.

SERVICE DEPARTMENT
FORD DIVISION
Ford MOTOR COMPANY
FIRST PRINTING—APRIL 1962

©1962 FORD MOTOR COMPANY
DEARBORN, MICHIGAN

PART 1 IDENTIFICATION

Hydraulically operated service brakes are used on all model cars for both conventional and power brakes. On some cars, single-anchor, internal-expanding self-adjusting brakes are used.

The standard hydraulic brake system on some trucks is assisted by a vacuum booster which may be installed as either standard or optional equipment.

Fig. 1 through 7 show the various service brake mechanisms. Table 1 shows the differences between the various service and parking brake systems.

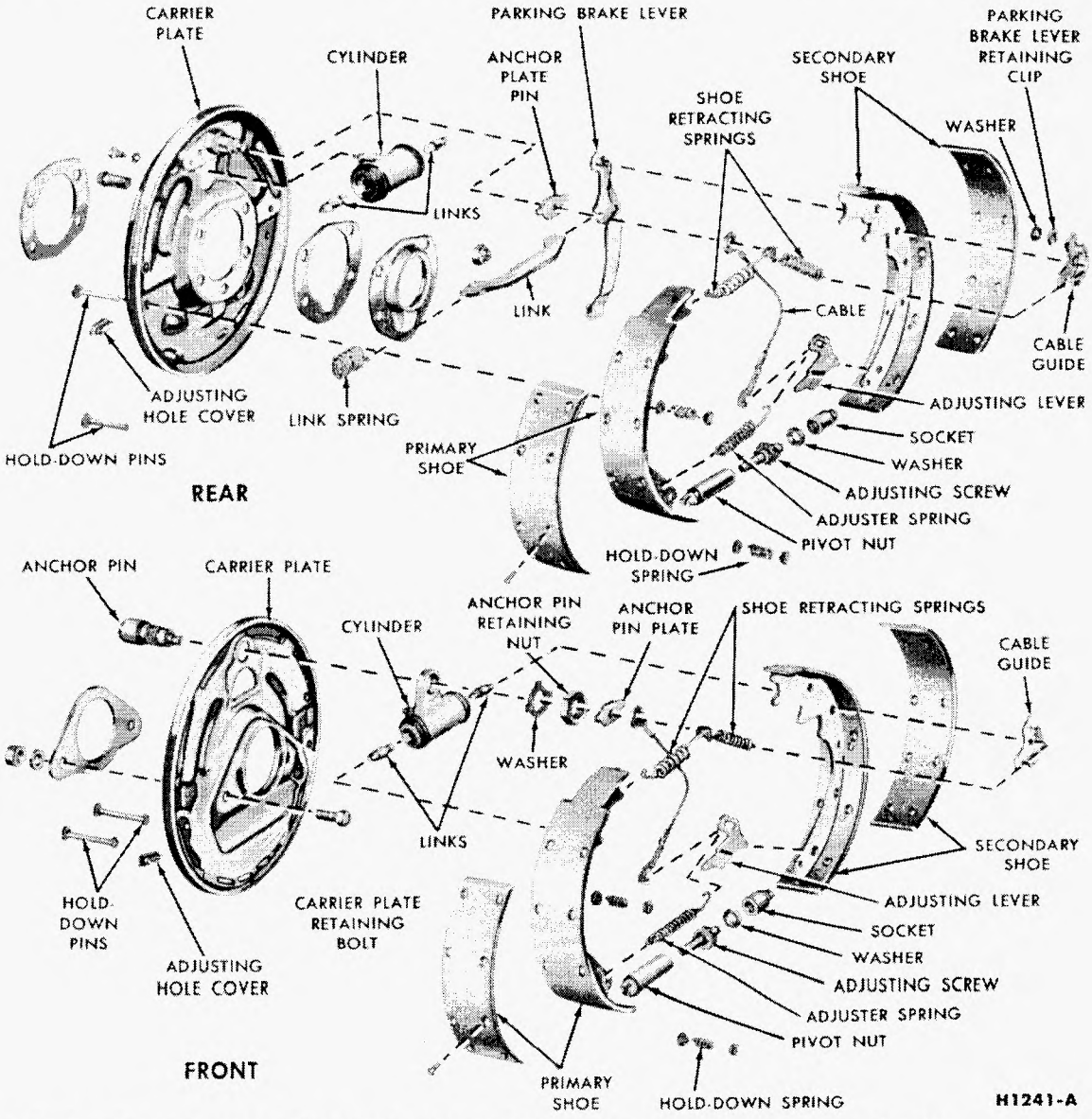

FIG. 1 — Duo-Servo, Single Anchor, Self-Adjusting Brakes — Galaxie

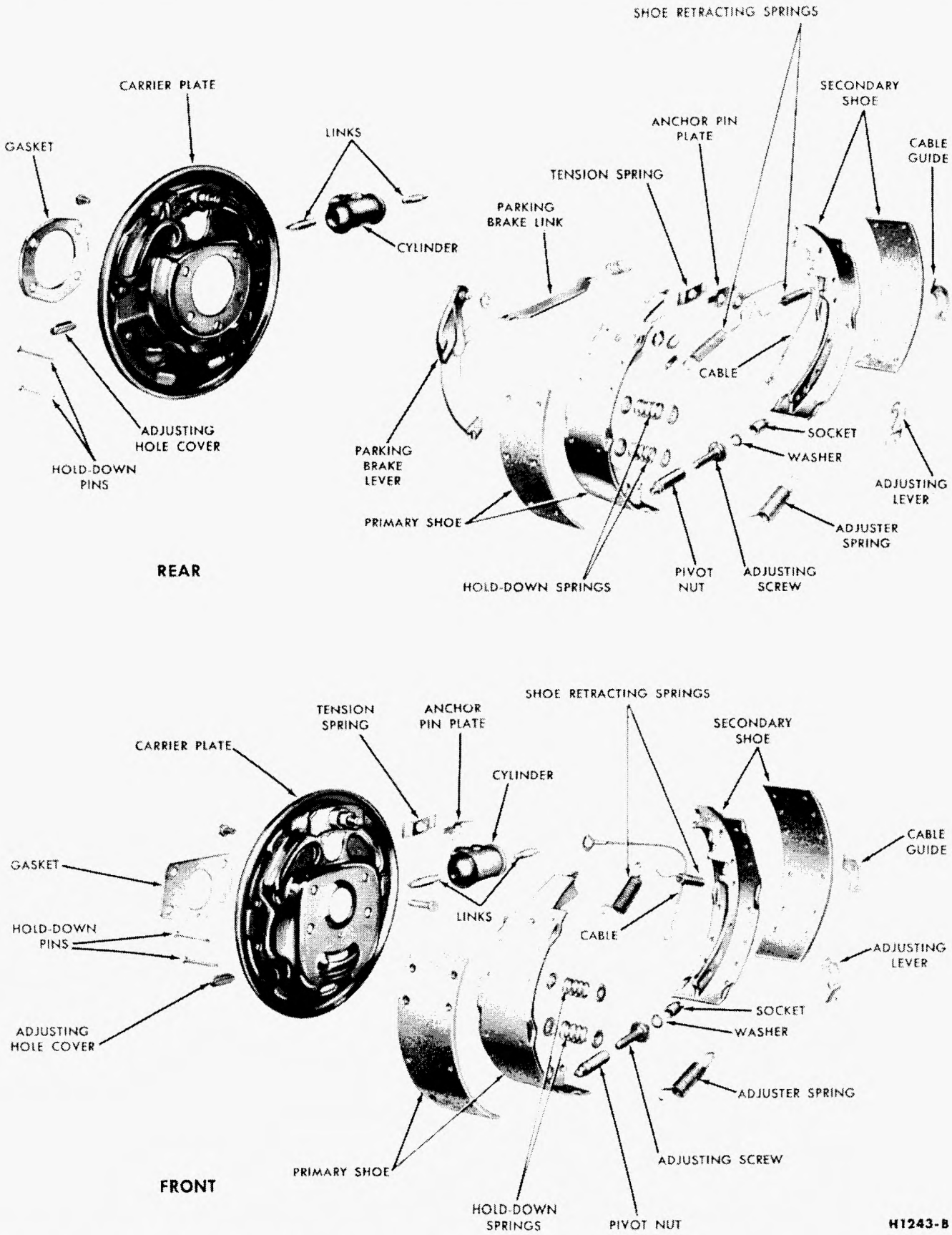

FIG. 2—Duo-Servo, Single Anchor, Self-Adjusting Brakes—Thunderbird

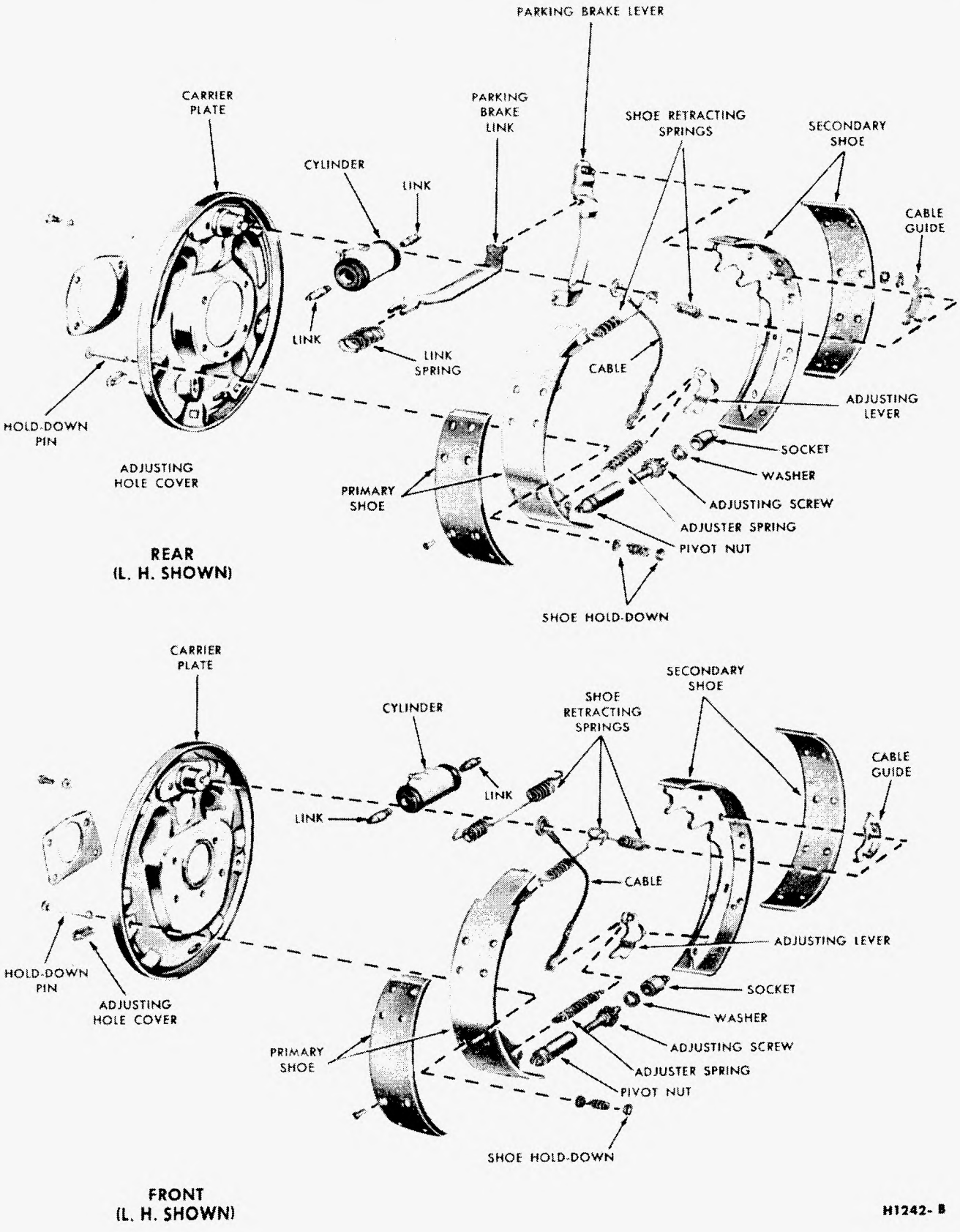

FIG. 3—Duo-Servo, Single Anchor, Self-Adjusting Brakes—Fairlane

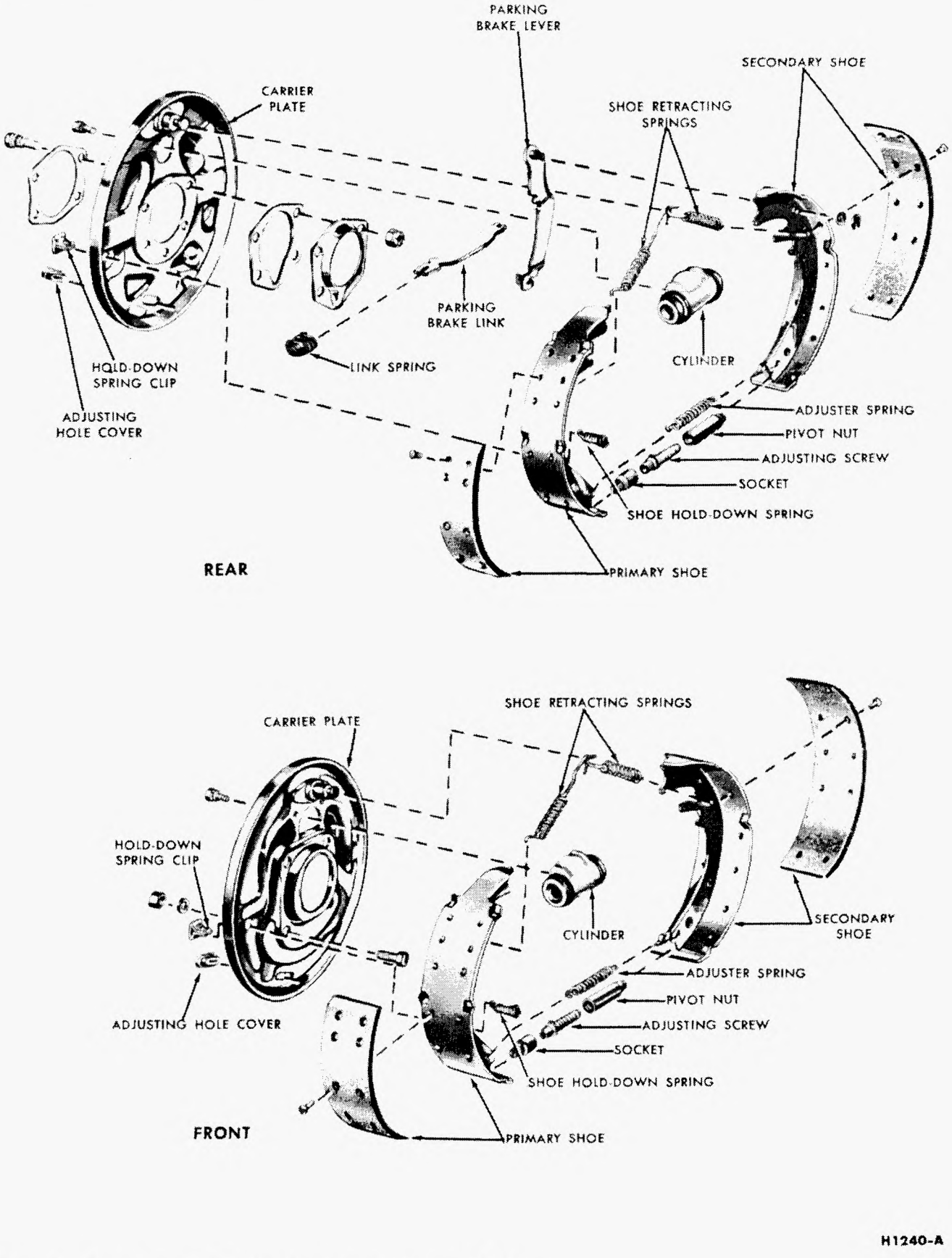

FIG. 4—Duo-Servo, Single Anchor Brakes—Falcon

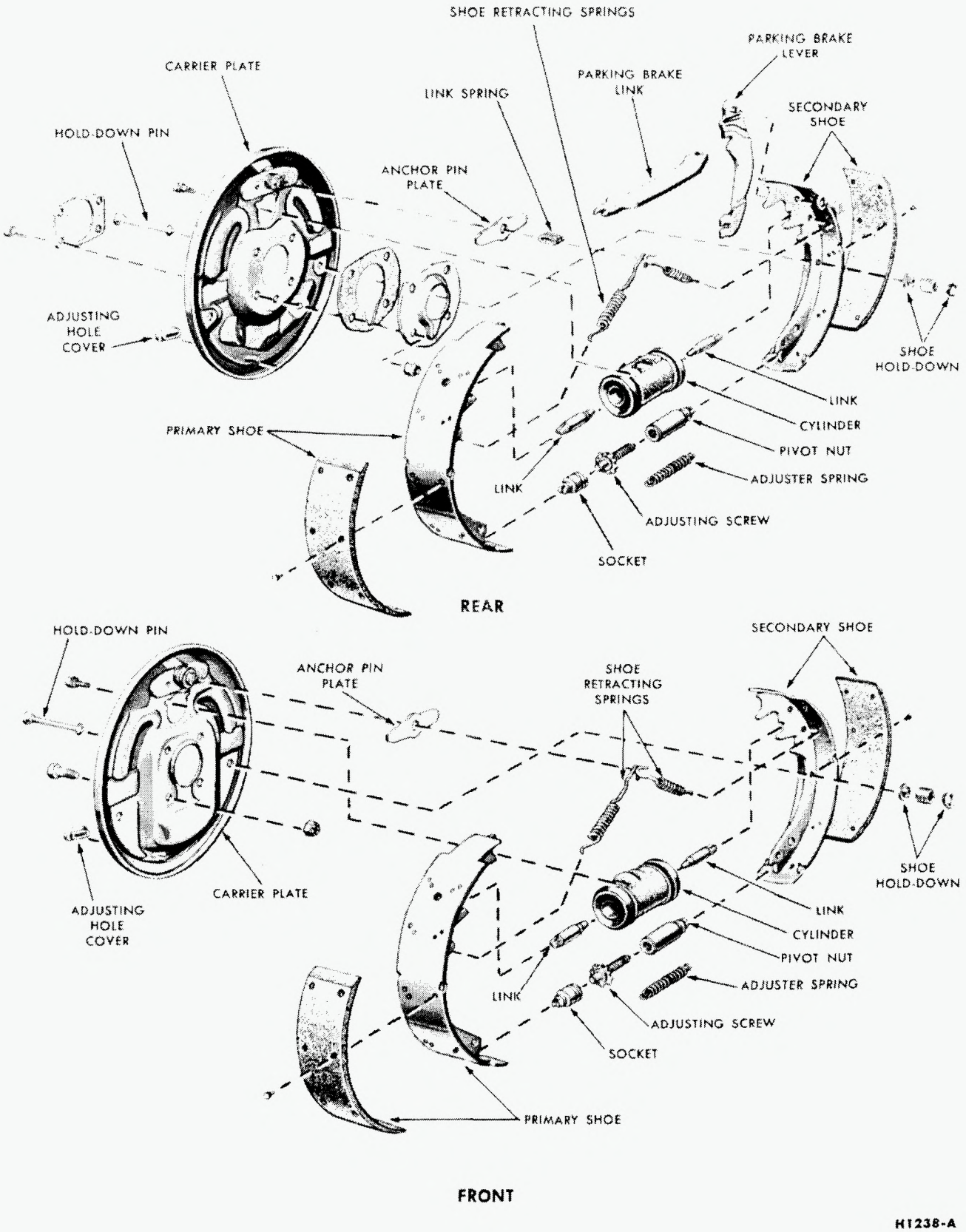

FIG. 5— Duo-Servo, Single Anchor, Brakes— Econoline

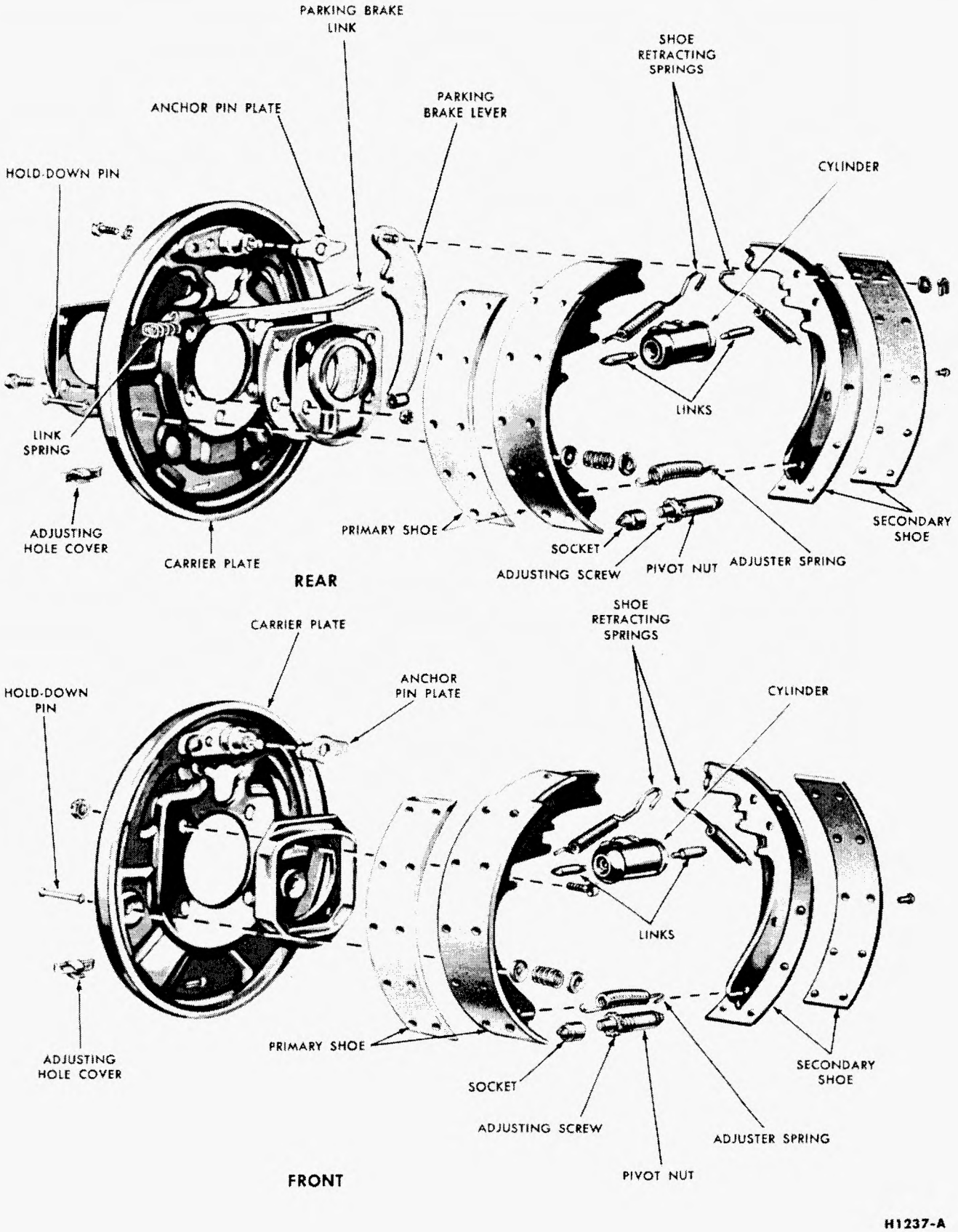

FIG. 6—Duo-Servo, Single Anchor Brakes—Typical F-100, F-250, and P-100 Series Truck

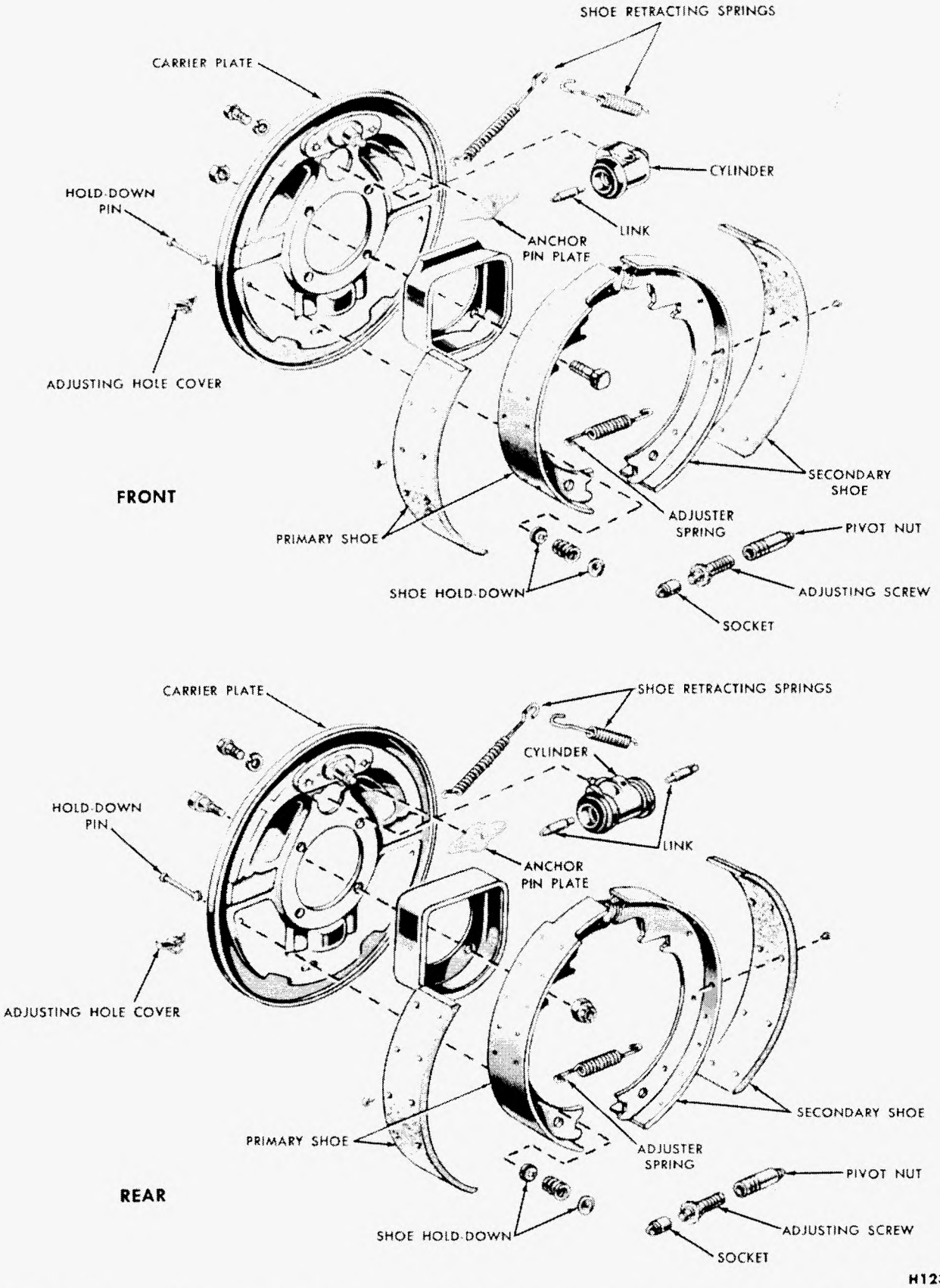

FIG. 7—Single-Servo and Duo-Servo, Single Anchor Brakes—Typical P-350, P-400, and F-350 Series Truck

TABLE 1. BRAKE IDENTIFICATION

CARS								
Type	Duo-Servo Single Anchor Self-Adjust		Duo-Servo Single Anchor Self-Adjust		Duo-Servo Single Anchor Self-Adjust		Duo-Servo Single Anchor	
Drum Inside Diam.	11.030		11.030		10.000		9.000	
	PRIM	SEC	PRIM	SEC	PRIM	SEC	PRIM	SEC
Lining Width—Front	2.50*	2.50*	3.00	3.00	2.25	2.25	2.25	2.25
Rear	2.50	2.50	3.00	3.00	1.75	1.75	1.50**	1.50**
Lining Length—Front	9.34	12.12	9.39	12.21	9.30	10.45	7.68	9.81
Rear	9.34	12.12	9.39	12.21	9.30	10.45	7.68	9.81
Wheel Cyl. Bore Diameter—Front	1-3/32		1-3/32		1-1/8		1-1/16	
Rear	15/16		15/16		29/32		13/16 ▽	
Master Cyl. Bore Diam.	1.000		0.875		1.000		1.000	
Master Cyl. Stroke	1.14		1.44		1.14		1.19	
Parking Brake	Cable Actuated Rear Wheel		Cable Actuated Rear Wheel		Cable Actuated Rear Wheel		Cable Actuated Rear Wheel	
Parking Brake Control	Pedal		Pedal		Bayonet Type Handle		Bayonet Type Handle	
Application	Galaxie 1961-1962		T-Bird 1961-1962		Fairlane 1962		Falcon 1960-1962	

TRUCKS								
Type	Duo-Servo Single Anchor		Duo-Servo Single Anchor		Duo-Servo Single Anchor		Front Single Anchor Single Servo / Rear Duo-Servo	
Drum Inside Diam.	10.000		11.000		12.125		Front 12.125 Rear 13 #	
	PRIM	SEC	PRIM	SEC	PRIM	SEC	PRIM	SEC
Lining Width—Front	2.50	2.50	2.00	2.00	2.00	2.00	2.00	2.00
Rear	1.75	1.75	1.75	1.75	2.00	2.00	2.50 ##	2.50 ##
Lining Length—Front	9.00	11.07	10.65	11.91	13.09	13.09	13.09	13.09
Rear	8.48	10.88	10.65	11.91	13.09	13.09	12.71	13.95
Wheel Cyl. Bore Diameter—Front	1-1/8		1-1/16		1-1/8		1-1/8	
Rear	13/16		7/8		1-1/8		1-1/4	
Master Cyl. Bore Diam.	1.000		1.000		1.250		1.250	
Master Cyl. Stroke	1.19		1.19		1.19		1.44	
Parking Brake	Cable Actuated Rear Wheel		Cable Actuated Rear Wheel		Cable Actuated Rear Wheel		External Contracting Band Type	
Parking Brake Control	Bayonet Type Handle		Bayonet Type Handle		Bayonet Type Handle		Bayonet Type Handle	
Brake Vacuum Booster	—		—		—		Type: Piston Make: Bendix Part Number: C1TT-2005-B / TBAD 2005-A Effective Diameter: 6.75 Slave Cyl. Diameter: 1.00 Stroke: 2.07 Displacement—Cu. In.: 1.67 Booster Vacuum Weight: 10.60	
Application	Econoline 1961-1962		F-100, P-100 1961-1962		F-250 1961-1962		350-400 Series † 1961-1962	

* Station Wagon, Police Interceptor and Taxi—3 inches
** Station Wagon—2.25 inches
\# P-350—12-1/8 inches
\#\# P-350—2.00 inches
▽ Station Wagon and Ranchero—7/8 inch
† F-350 Front and Rear Single Servo

PART 2 GENERAL REPAIR

1 HYDRAULIC BRAKE REPAIR

MASTER CYLINDER

ALL CARS AND F-100—250 TRUCKS

Removal

1. On a car with conventional brakes, and on F-100—250 trucks, disconnect the rubber boot from the push rod end of the master cylinder, in the passenger compartment or cab.

2. On all cars, disconnect the brake line(s) from the fitting on the master cylinder. Disconnect the stop light wires from the switch (Fig. 8).

3. On a car with conventional brakes, and on F-100—250 trucks, remove the master cylinder retaining nuts (bolts on Falcon), and lift the cylinder out and away from the push rod. Remove the rubber boot from the push rod.



FIG. 8—Typical Brake Master Cylinder Installed

On a car with power brakes, remove the nuts and washers that secure the master cylinder to the power booster unit (Fig. 9), and remove the master cylinder.

Installation

1. On a car with conventional brakes, and on F-100—250 trucks, position the rubber boot on the push rod, insert the rod into the piston, and position the master cylinder against the dash panel. Install the master cylinder retaining nuts (bolts on Falcon), and torque to specifications.

On a car with power brakes, install the master cylinder over the push rod onto the two studs in the power booster body. Install the lock washers and retaining nuts. Torque the nuts to specifications.

2. Connect the brake line(s) to the outlet fitting, finger-tight.

3. Fill the master cylinder reservoir to the specified level with heavy-duty brake fluid. Install and tighten the cap finger-tight. Apply pressure to the brake pedal several times to expel air at the brake line fitting, then tighten the fitting nut(s) while the pedal is fully depressed.

On Fairlane and Galaxie models, equipped with a booster, the cylinder can be bled at the bleed screw on the cylinder.

4. Remove the filler cap and fill the reservoir to the specified level. Install the cap and wipe off any fluid from the cylinder.

5. Connect the wires to the stop light switch.

6. On a car with conventional brakes, and on F-100—250 trucks, connect the rubber boot to the master cylinder in the passenger compartment or cab.

Disassembly

Clean the outside of the cylinder with solvent, then remove the filler cap and gasket. Pour out any brake fluid remaining in the reservoir and cylinder. Remove the stop light switch, and the brake line fitting from the forward end of the cylinder (Fig. 10). Remove the snap ring from the bore at the rear of the cylinder. Remove the piston and secondary cup assembly, the primary cup, spring, valve, and valve seat from the cylinder bore.

Assembly

Dip all parts except the master cylinder body in clean FoMoCo heavy-duty brake fluid. Install the brake line fitting in the forward end of the cylinder. Install a new gasket and the filler cap. Install the stop light switch and tighten securely. Install the valve seat,

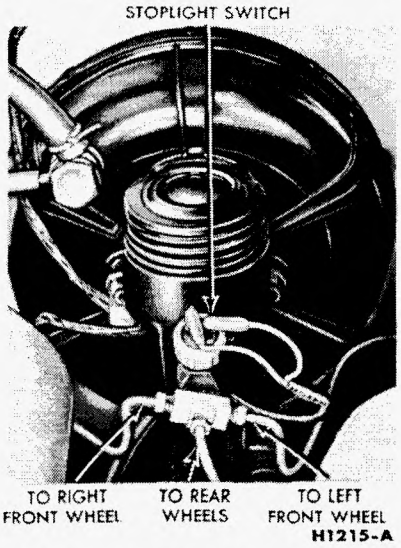

FIG. 9—Brake Master Cylinder Installed to Booster

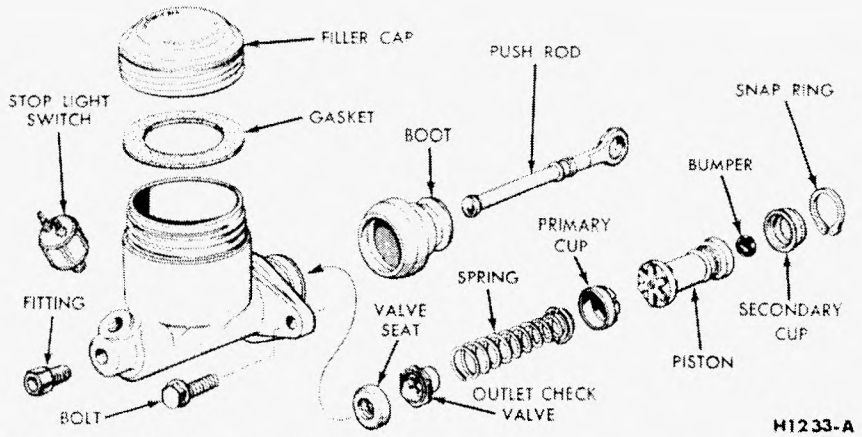

FIG. 10—Typical Brake Master Cylinder—Cars and F-100 and F-250 Trucks

valve, spring, primary cup, and the piston and secondary cup assembly in the cylinder bore, and secure them with the snap ring (Fig. 10). The bumper is installed in the piston with conventional brakes only.

ECONOLINE

Removal

1. Raise the front end of the truck and position safety stands.

2. Remove the retaining bolts and the forward splash shield.

3. Disconnect the brake pedal return spring (Fig. 11).

4. Remove the lock nut and the eccentric bolt, which connect the return spring bracket and the master cylinder push rod to the brake pedal bracket.

5. Remove the snap ring from the brake pedal pivot pin.

6. Remove the fitting bolt, which attaches the outlet fitting to the end of the cylinder, and two washers. The outlet fitting will remain suspended by the brake lines (Fig. 12).

7. Remove the two mounting bolts that secure the cylinder between the two mounting brackets. To prevent the brake pedal and master cylinder from swinging freely after the mounting bolts are removed, hold the master cylinder firmly when removing the mounting bolts.

8. Swing the cylinder down, and remove it from the brake pedal pivot pin. Remove the pivot pin bushings from the pivot pin bore in the master cylinder body.

Installation

1. Place the brake pedal pivot pin bushings in the pivot pin bore in the cylinder body. Mount the cylinder on the pivot pin.

2. Swing the cylinder up and into position between the mounting brackets (Fig. 12). Install the mounting bolts and the pivot pin snap ring (Fig. 11). Torque the mounting bolts to specifications.

3. Connect the outlet fitting to the master cylinder by installing the fitting bolt and new washers (one washer on each side of the outlet fitting).

4. Connect the push rod and the return spring bracket to the brake pedal with the eccentric bolt and nut.

5. Connect the return spring to the bracket (Fig. 11).

6. Bleed the hydraulic system.

7. Adjust the brake pedal free travel to specifications. Torque the eccentric bolt nut to specifications.

8. Apply chassis lubricant to the grease fitting at the brake pedal pivot.

9. Install the splash shield and retaining bolts. Remove the safety stands and lower the truck.

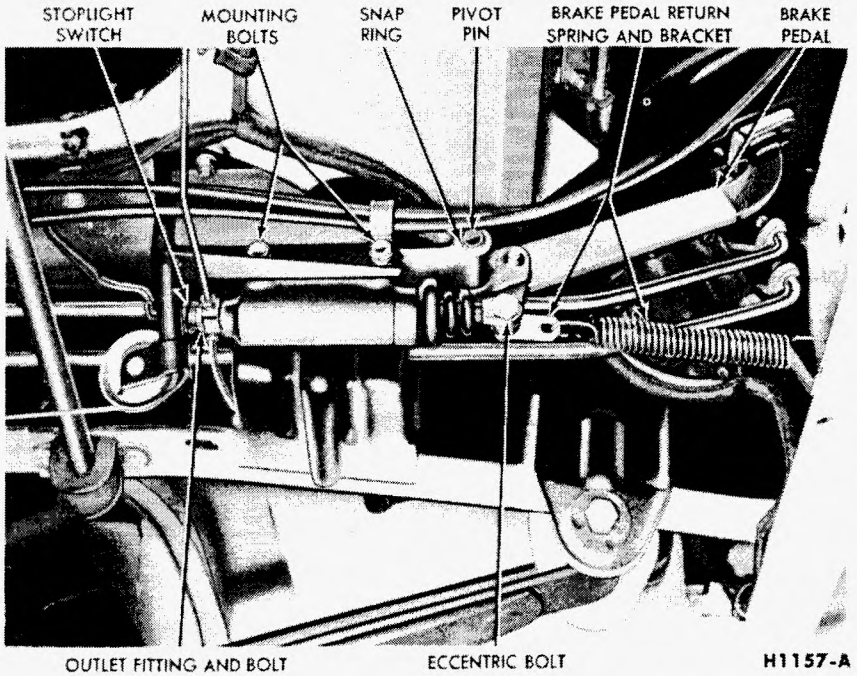

FIG. 11—Econoline Brake Master Cylinder—Installed

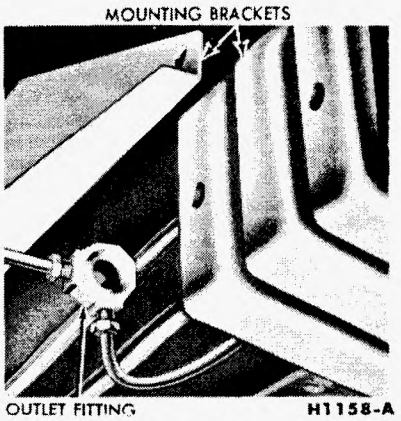

FIG. 12—Econoline Master Cylinder Mounting Bracket

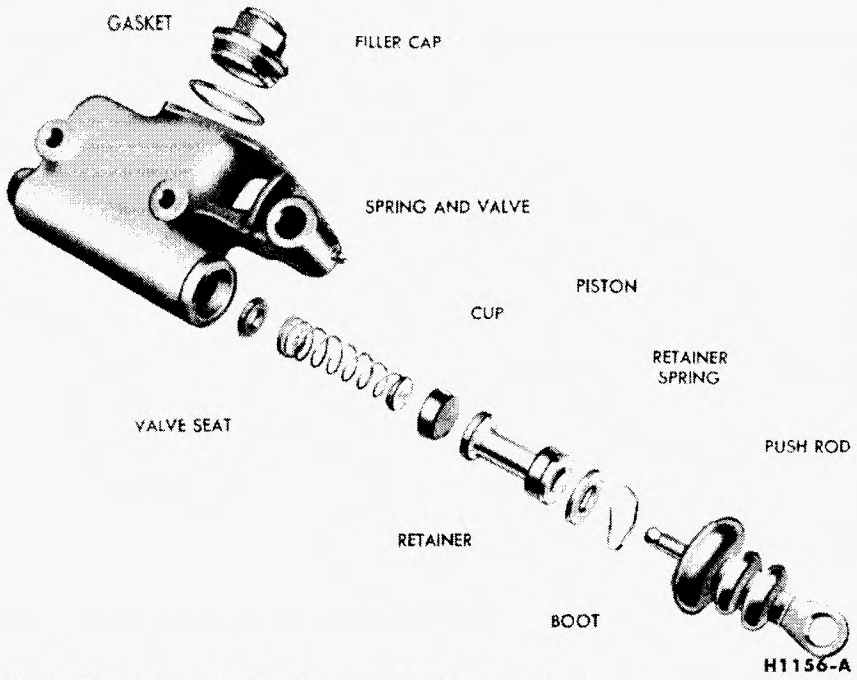

FIG. 13—Econoline Brake Master Cylinder—Disassembled

Disassembly

1. Clean the outside of the cylinder, remove the filler cap and gasket (Fig. 13), and pour out any remaining fluid.

2. Place the cylinder in a vise, and remove the rubber boot and the push rod from the end of the cylinder.

3. Remove the retainer spring from the push rod end of the cylinder, then remove the retainer, piston, cup, spring and valve assembly, and valve seat from the cylinder bore.

Assembly

1. Dip all parts except the cylinder body in clean, heavy-duty brake fluid.

2. Position the gasket and filler cap in the cylinder body and tighten the cap finger-tight.

3. Insert the valve seat, spring and valve assembly, and cup into the cylinder bore (Fig. 13).

4. Compress the piston against the cup, then install the retainer and retainer spring.

5. Position the push rod in the rubber boot, insert the push rod against the piston, and install the rubber boot on the cylinder body.

F-350 TRUCKS

Removal

1. If the truck is equipped with a vacuum booster, stop the engine and expel all vacuum from the booster system.

2. If the stoplight switch is mounted on the master cylinder, disconnect the stoplight switch wires from the switch.

3. Disconnect the brake line from the brake tube fitting.

4. Force as much brake fluid as possible from the master cylinder into a suitable container by pushing down the brake pedal all the way several times.

5. Disconnect the rubber boot from the rear end of the master cylinder in the cab.

6. Remove the bolts that hold the master cylinder against the dash panel, then lift the cylinder away from the push rod and out of the engine compartment.

Installation

1. With the rubber boot on the piston push rod, guide the master cylinder over the end of the push rod, and position the cylinder against the mounting surface. Install the mounting bolts. Torque the bolts to specifications.

2. Connect the brake line to the master cylinder fitting, but leave the brake line fitting loose.

3. Fill the master cylinder reservoir with heavy-duty brake fluid to the specified level.

4. Push the brake pedal down slowly by hand several times to let air escape at the brake line fitting. Hold the pedal down and tighten the brake line fitting. Release the brake pedal. **Do not release the brake pedal until the fitting is tightened, as additional air will be introduced into the master cylinder.**

5. On the trucks equipped with a booster, bleed the booster at the bleeder screws.

6. After seeing that the master cylinder reservoir is filled to the specified level with heavy-duty brake fluid, install the filler cap. Wipe off any fluid from the outside of the cylinder and brake line.

7. If the stoplight switch is mounted on the master cylinder, connect the stoplight switch wires to the switch.

8. Connect the rubber boot to the end of the cylinder.

9. Check and, if necessary, adjust the brake pedal free travel to specifications.

P-SERIES TRUCKS

Removal

1. If the truck is equipped with a vacuum booster, the engine must be stopped and all vacuum must be expelled from the booster system before the hydraulic lines are disconnected.

2. Turn the front wheels all the way to the left, and remove the fender apron attaching screws so that the apron can be moved to provide access to the master cylinder.

3. Disconnect the stoplight switch wires from the switch.

4. Disconnect the brake line from the brake tube fitting.

5. Force as much brake fluid as possible from the master cylinder into a suitable container by pushing down the brake pedal all the way several times.

6. Disconnect the rubber boot from the end of the master cylinder.

7. Remove the brake pedal return spring, remove the cotter pin from the clevis pin, and remove the master cylinder push rod and boot. Remove the 3 mounting bolts and remove the master cylinder from the mounting bracket and away from the truck.

Installation

1. Assemble the master cylinder to the mounting bracket and secure with the 3 mounting bolts. Install the push rod and boot to the front of the master cylinder. Connect the front end of the push rod to the upper holes of the brake pedal extension with the clevis pin, and secure with a cotter pin. On a truck equipped with a vacuum booster, connect the push rod and insert the clevis pin at the lower holes of the pedal extension. Install the brake pedal retracting spring.

2. Connect the brake line to the master cylinder fitting, but leave the brake line fitting loose.

3. Fill the master cylinder with heavy-duty brake fluid to the specified level.

4. Push the brake pedal down slowly by hand several times to let air escape at the brake line fitting. Hold the pedal down and tighten the brake line fitting. **Do not release the brake pedal until the fitting is tightened, as additional air will be introduced into the master cylinder.** Repeat this procedure until air ceases to escape at the fitting and a firm pedal is obtained.

5. After seeing that the master cylinder reservoir is filled with heavy-duty brake fluid to the specified level, install the filler cap. Wipe off the fluid from the outside of the cylinder and brake line.

6. Connect the stoplight switch wires to the switch.

7. Connect the rubber boot to the end of the cylinder. Reposition the fender apron and secure with the 5 retaining bolts.

8. Check and, if necessary, adjust the brake pedal free travel.

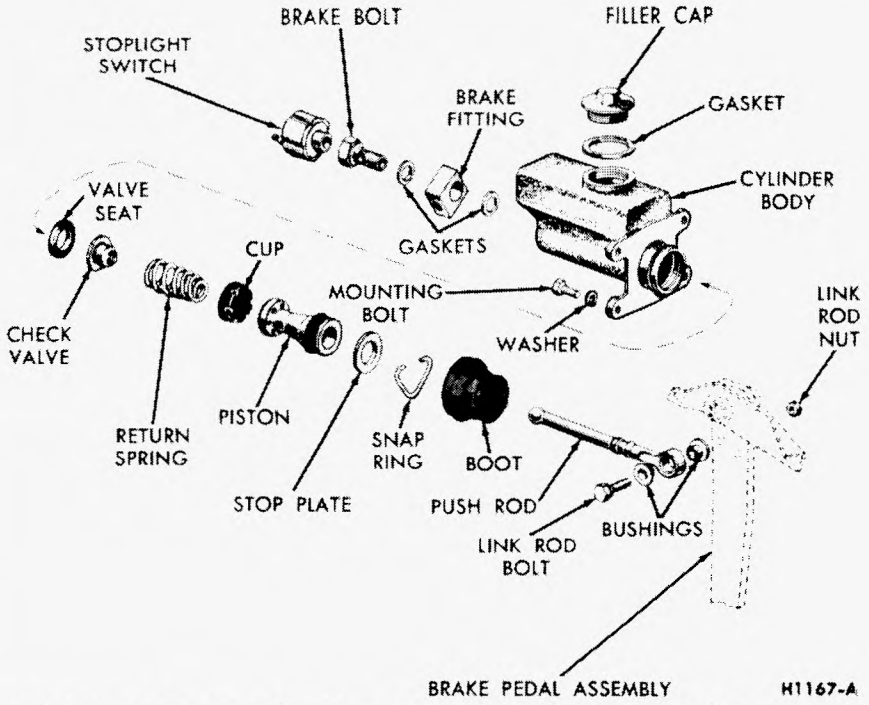

FIG. 14—F-350 Brake Master Cylinder—Typical of P-Series

DISASSEMBLY OF MASTER CYLINDER (F- AND P-SERIES TRUCKS)

1. Clean the outside of the cylinder and remove the filler cap and gasket. Pour out any brake fluid that may remain in the cylinder and reservoir.

2. Remove the stoplight switch if it is mounted on the master cylinder.

3. Remove the brake bolt, fitting, and gaskets from the forward end of the cylinder (Fig. 14). Remove the snap ring from the bore at the rear end of the cylinder and remove the stop plate, piston, cup, spring, check valve, and seat from the cylinder bore. If necessary, blow through the forward bolt hole to remove the parts.

ASSEMBLY OF MASTER CYLINDER (F- AND P-SERIES TRUCKS)

1. Dip all parts except the master cylinder body in clean hydraulic brake fluid. Use only heavy-duty brake fluid.

2. Install the brake fitting, bolt, and gaskets (Fig. 14), on the forward end of the cylinder. If the stoplight switch mounts on the master cylinder, attach the switch to the brake bolt.

3. Install the valve seat, check valve, spring, cup, piston, and stop plate in the cylinder bore. Install the snap ring in the rear end of the bore.

CLEANING AND INSPECTION OF MASTER CYLINDER—ALL TYPES

Clean all master cylinder parts in clean denatured alcohol.

Inspect the parts for wear or damage, replacing them as required. **When using a master cylinder repair kit, install all the parts supplied.**

Check the ports and vents in the master cylinder to make sure that all are open and free of foreign matter.

If the spring-type valve (riveted to the front end of the piston) is loose or has moved so that the piston ports are open, replace the piston.

Inspect the cylinder wall for scores or rust, and recondition if necessary by honing. **Hone the cylinder wall no more than necessary (0.003-inch maximum). Oversize pistons and cups are not available for excessively honed cylinders.**

Remove any burrs or loose metal that may have resulted from

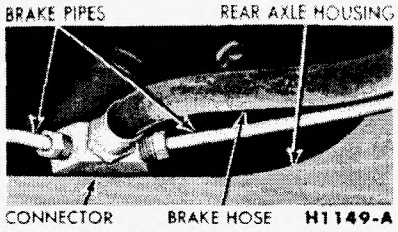

FIG. 15—Typical Rear Brake Tube Connector

the honing operation, and clean the cylinder with denatured alcohol.

HYDRAULIC LINE REPLACEMENT

Steel tubing is used throughout the brake system with the exception of the flexible hoses at the front wheels and at the rear axle housing brake tube connector (Fig. 15).

When connecting a replacement hose to the rear tube connector or to either front brake cylinder, always use new gaskets. When connecting tubes to the rear connector, hoses, or rear brake cylinders, tighten the pipe fitting nut to the specified torque with tool 1112-144.

If a section of the brake tubing becomes damaged, the entire section should be replaced with tubing of the same size, shape, and length. **Copper tubing should not be used in a hydraulic system.**

The brake tubing should be double flared to provide a leakproof connection, and should be cleaned with denatured alcohol before installation.

A flexible brake hose should be replaced if it shows any signs of deterioration.

When installing a new brake hose, position the hose so as to avoid contact with other chassis parts.

BRAKE PEDAL REPLACEMENT AND ADJUSTMENT

FALCON—WITH MANUAL-SHIFT TRANSMISSION

Removal

1. Back off the clutch pedal over-center spring adjusting nut and disconnect the equalizer rod. Remove the clutch pedal bumper and the over-center spring bracket from the support bracket. Remove the over-center adjusting nut and bolt. Remove the push rod eccentric bolt and washers.

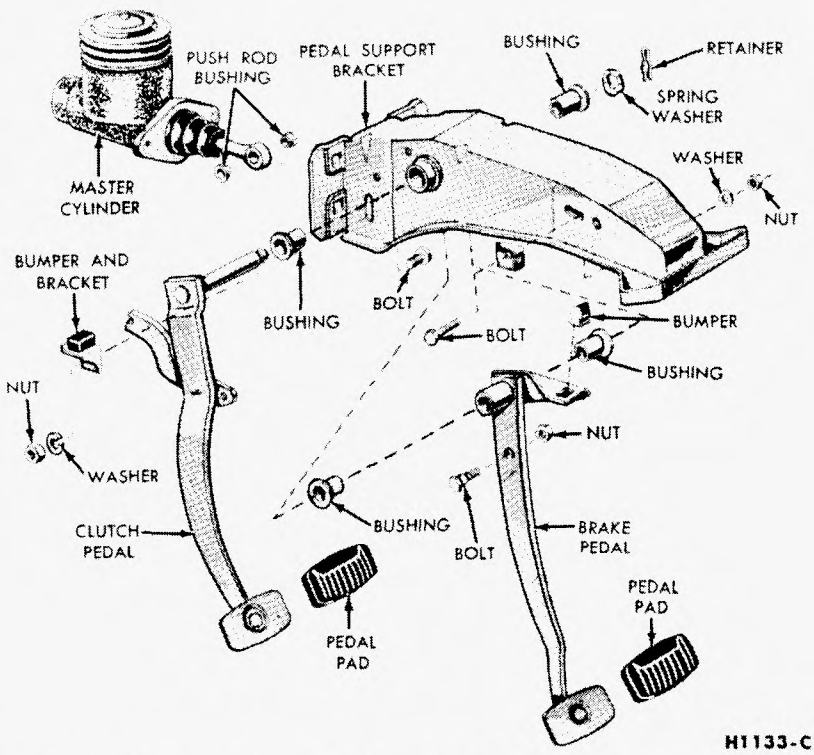

FIG. 16—Falcon Brake Pedal and Related Parts

2. Remove the retainer (Fig. 16) from the clutch and brake pedal shaft and remove the clutch pedal, brake pedal, and bushings.

Installation

1. Apply a coating of Lubriplate to the bushings and install them in the brake pedal and support bracket. Position the brake pedal arm to the support bracket. Insert the spacer washer.

2. Insert the clutch pedal shaft through the brake pedal support bracket and brake pedal, then install the spring washer and the retainer (Fig. 16).

3. Connect the clutch pedal rod to the clutch pedal and adjust the free travel. Install the master cylinder push rod eccentric bolt and lock nut. Adjust the brake pedal free travel to specifications by rotating the eccentric bolt. Hold the bolt securely and torque the lock nut to specifications. Recheck the pedal free travel to make sure that the adjustment did not change when the lock nut was tightened.

4. Connect the clutch link to the release lever. Adjust the over-center spring nut to the correct stud length specifications.

FALCON—WITH FORDOMATIC TRANSMISSION

Removal

1. Remove the master cylinder push rod to brake pedal arm retaining nut, eccentric bolt, and two nylon washers (Fig. 16).

2. Remove the retaining clip from the end of the brake pedal shaft, then remove the spring washer and nylon bushing.

3. Remove the brake pedal shaft. Remove the shaft bushing and remove the pedal.

4. Remove the brake pedal bushings. Remove the brake pedal pad and the pedal bumper.

Installation

1. Install the brake pedal pad and bumper on the pedal assembly. Apply a coating of Lubriplate to the two bushings and install them in the brake pedal. Position the brake arm to the support bracket. Insert the spacer washer.

2. Install the brake pedal shaft nylon bushing. Install the nylon bushing, spring washer, and re-

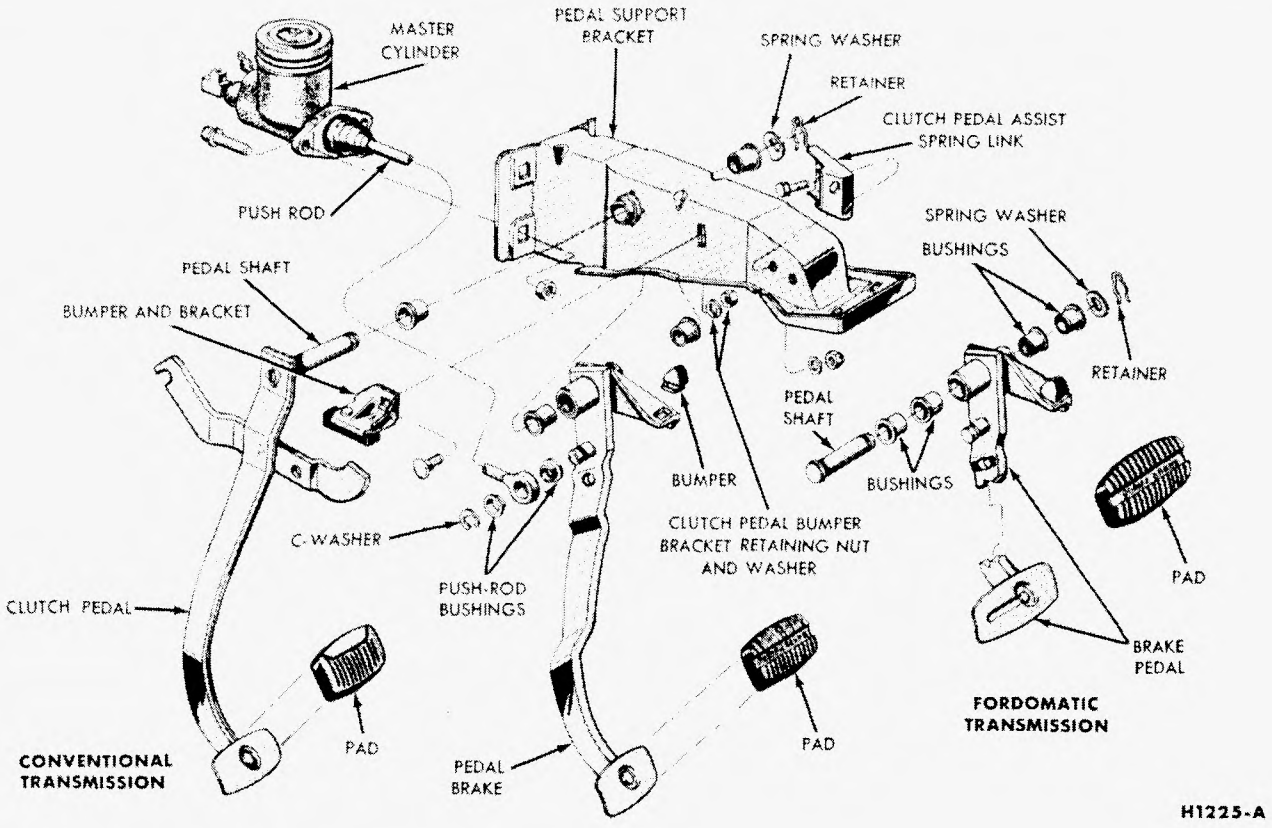

FIG. 17—Fairlane Brake Pedal and Related Parts

taining clip (Fig. 16) on the pedal shaft. Install the push rod eccentric bolt, washers, and retaining nut.

3. Adjust the brake pedal free travel to specifications by rotating the eccentric bolt. Hold the bolt securely and torque the lock nut to specifications. Recheck the pedal free travel to make sure that the adjustment did not change when the lock nut was tightened.

FAIRLANE—WITH MANUAL-SHIFT TRANSMISSION

Removal

1. Back off the clutch pedal assist spring adjusting nut to the last few threads. Disconnect the clutch pedal-to-equalizer rod at the clutch pedal by removing the hairpin-type retainer and 2 spring washers.

2. Remove the clutch pedal bumper bracket and the assist spring link (bracket) from the pedal support bracket (Fig. 17). Remove the assist spring adjusting nut, and disconnect the retainer and spring from the link.

3. Disconnect the master cylinder push rod from the brake pedal assembly. On a car with conventional brakes, remove the C-washer and nylon bushings (Fig. 17). On a car with power brakes, remove the push rod eccentric bolt, lock nut, and bushings.

4. Remove the hairpin-type retainer and spring washer from the clutch and brake pedal shaft, then remove the clutch pedal and shaft assembly, the brake pedal assembly, and the bushings from the pedal support bracket (Fig. 17).

Installation

1. Apply a coating of Lubriplate to the bushings and locate all bushings in their proper places on the clutch and brake pedal assemblies.

2. Position the brake pedal to the support bracket, then install the clutch pedal and shaft assembly through the support bracket and brake pedal assembly. Install the spring washer and retainer (Fig. 17).

3. Hook the clutch assist spring to its retainer, and connect the retainer to the link with the adjusting nut. Mount the assist spring link and the clutch pedal bumper bracket to the pedal support bracket (Fig. 17). Adjust the bumper for clutch total travel.

4. Connect the clutch pedal-to-equalizer rod to the clutch pedal assembly with the spring washers and hairpin retainer. Adjust clutch pedal free play to specifications by lengthening or shortening the rod at the equalizer.

5. Adjust the clutch lever assist spring to specifications by loosening or tightening the adjusting nut on the retainer at the link.

6. Connect the master cylinder push rod to the brake pedal assembly.

On a car with conventional brakes, use a C-washer and nylon bushings (Fig. 17). On a

car with power brakes, use the eccentric bolt, bushings and lock nut.

7. With a power brake, adjust the brake pedal height to specifications by rotating the eccentric bolt (Fig. 49). Hold the eccentric bolt securely and torque the lock nut to specifications. Recheck the pedal height to make sure that the adjustment did not change when the lock nut was tightened.

FAIRLANE—WITH FORDOMATIC TRANSMISSION

Removal

1. Disconnect the master cylinder push rod from the brake pedal assembly. On a car with conventional brakes, remove the C-washer and nylon bushings. On a car with power brakes, remove the push rod eccentric bolt, lock nut, and bushings.

2. Remove the hairpin-type retainer and spring washer from the brake pedal shaft, then remove the shaft, the brake pedal assembly, and the bushings from the pedal support bracket (Fig. 17).

Installation

1. Apply a coating of Lubriplate to the bushings and locate all the bushings in their proper places on the pedal assembly and shaft (Fig. 17). Position the brake pedal assembly to the support bracket, then install the pedal shaft through the support bracket and brake pedal assembly. Install the spring washer and retainer.

2. Connect the master cylinder push rod to the brake pedal assembly. On a car with conventional brakes, use a C-washer and nylon bushings (Fig. 17). On a car with power brakes, use the eccentric bolt bushings and lock nut.

3. With a power brake, adjust the brake pedal height to specifications by rotating the eccentric bolt (Fig. 49). Hold the eccentric bolt securely and torque the lock nut to specifications. Recheck the pedal height to make sure that the adjustment did not change when the lock nut was tightened.

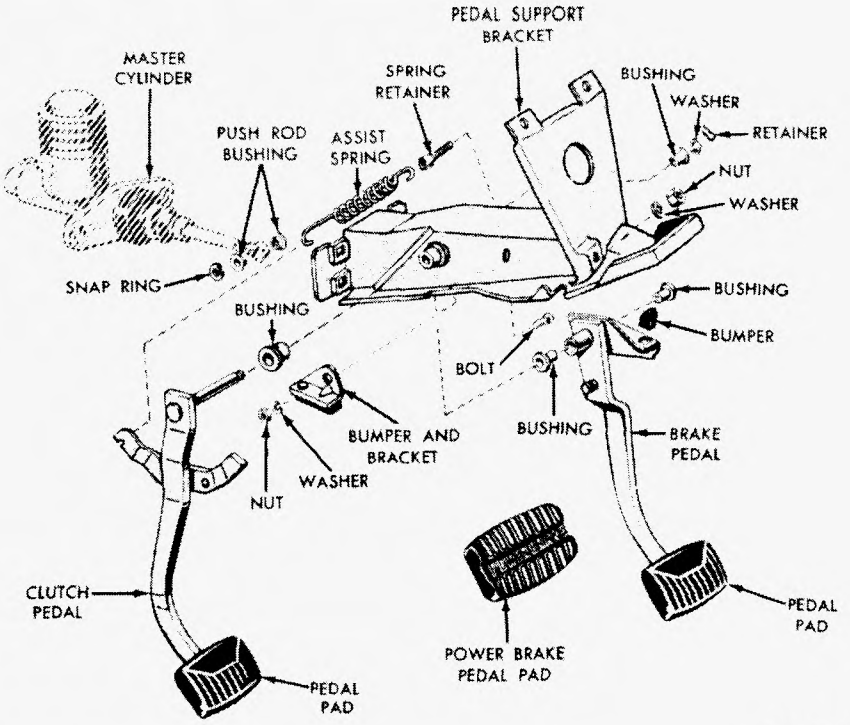

FIG. 18—Galaxie Brake Pedal and Related Parts

GALAXIE

Removal

1. Disconnect the master cylinder push rod from the brake pedal. If the car is equipped with a conventional or overdrive transmission, the clutch lever assist spring, retainer, and idler lever rod should be removed first.

2. Remove the retainer and washer (Fig. 18) from the right hand side of the brake pedal shaft. Remove the shaft, bushings, pedal or pedals, and the insulators from the pedal support. Remove the brake pedal pad and plate assembly.

Installation

1. Install the brake pedal pad and plate assembly and retaining bolt and nut. Torque the pedal pad and plate retaining nut to specifications. Apply a coating of Lubriplate to the support bushings and install the bushings in the support. Insert the brake pedal in the support (Fig. 18) and push the shaft through. (On a car equipped with a conventional or overdrive transmission, the shaft is attached to the clutch pedal.)

2. Install the washer and clip on the right hand end of the pedal shaft. Insert the bushings into the push rod and install the brake push rod on the pedal pin. Install the snap ring on the pin.

3. On a car equipped with a conventional or overdrive transmission, install the clutch lever idler rod, assist spring, and the retainer.

THUNDERBIRD

Removal

Remove the C-washer that retains the push rod link to the brake pedal assembly (Fig. 19). Remove the retainer and spring washer from the left hand end of the brake pedal pivot pin. Slide the pivot pin out of the brake pedal and bracket, then remove the pedal.

Installation

Install the pivot pin bushings on the replacement pedal assembly. Lift the pedal assembly into position in the mounting bracket and slide the pivot pin through the pedal and bracket from the right hand side. Install the spring

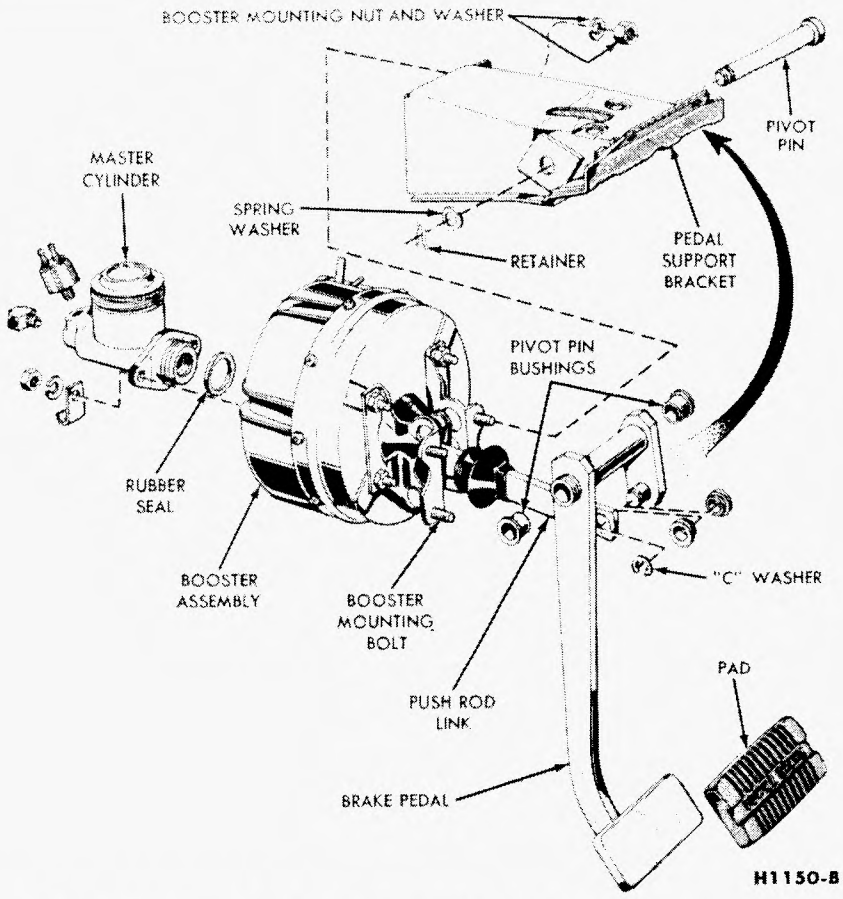

FIG. 19—Thunderbird Brake Pedal and Related Parts

washer and secure the pivot pin in place by installing the retainer in the groove at the left hand end of the pin (Fig. 19). Connect the push rod link to the pedal assembly and secure with the C-washer.

ECONOLINE

Removal

1. Working inside the cab, fold back the floor mat and remove the retaining screws and the steering column floor pan cover. Pull up the rubber seal.

2. Raise the front end of the truck, and place safety stands into position.

3. From underneath the truck, remove the retaining bolts and the forward splash shield.

4. Disconnect the brake pedal return spring, and remove the brake pedal eccentric bolt, return spring bracket, and nut (Fig. 11).

5. Remove the snap ring from the pivot pin, slide the brake pedal and pivot pin assembly out of the pivot pin bore in the master cylinder, and lower the assembly from the left side of the floor pan.

6. Remove the bushings from the pivot pin bore in the master cylinder.

Installation

1. Install the pivot pin bushings in the pivot pin bore in the master cylinder.

2. Insert the brake pedal pivot pin into the bore, then connect the master cylinder push rod and the return spring bracket with the eccentric bolt and nut. Do not tighten the nut at this time.

3. Connect the brake pedal return spring at the bracket, and install the snap ring on the pivot pin.

4. Adjust the brake pedal free travel to specifications by rotating the eccentric bolt. Hold the bolt securely and torque the lock nut to specifications. Recheck the pedal free travel to make sure that the adjustment did not change when the lock nut was tightened.

5. Apply chassis lubricant to the grease fitting at the brake pedal pivot.

6. Replace the forward splash shield, and secure with retaining bolts. Remove the safety stands and lower the truck.

7. Position the rubber seal at the brake pedal in the cab, install the steering column floor pan, and secure with retaining screws.

F-SERIES TRUCKS

Removal

1. Remove the brake pedal retracting spring.

2. Remove the brake master cylinder push rod eccentric bolt nut, and remove the bolt and nylon bushing (Fig. 20).

3. Remove the retainer and spring washer from the pedal shaft. Then slide the shaft to the left and remove the brake pedal, bushings, and sleeve.

4. Remove the 2 bushings from the pedal, and remove the bumper from the pedal extension bracket.

Installation

1. Coat all bushings and the pedal shaft with a small quantity of Lubriplate or an equivalent lubricant.

2. Install the bumper on the pedal extension bracket, and position the nylon bushings in the brake pedal shaft bore.

3. Position the brake pedal assembly and sleeve in the pedal support bracket. Slide the pedal shaft through the sleeve and pedal and secure with the spring washer and retainer.

4. Position the nylon bushing in the bore of the push rod. Connect the push rod to the brake pedal with the eccentric bolt and nut. Install the pedal retracting spring.

5. Adjust the brake pedal free travel to specifications by rotating the eccentric bolt. Hold the bolt securely and torque the lock nut to specifications. Recheck the pedal free travel to make sure that the adjustment did not change when the lock nut was tightened.

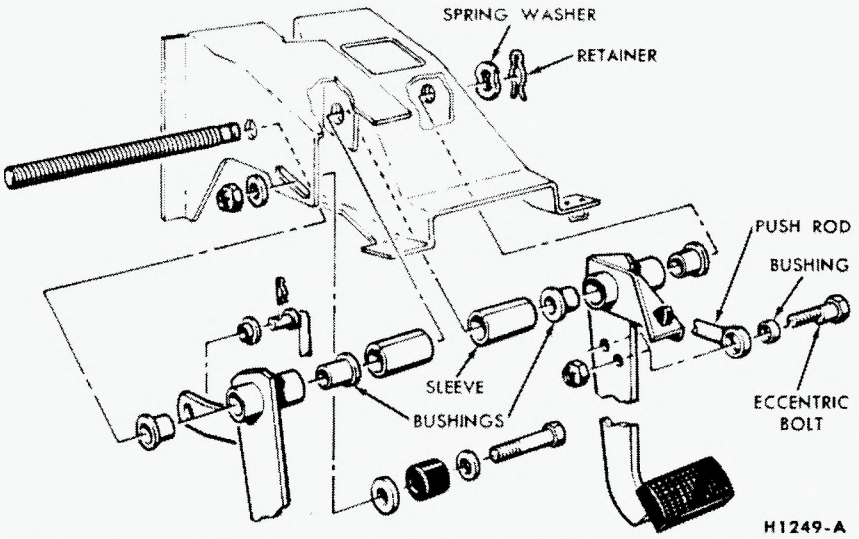

FIG. 20—F-Series Brake Pedal and Related Parts

P-SERIES TRUCKS

Removal

1. Open the hood and disconnect the transmission gearshift rods from the shaft levers. Set the rods so that the maximum working space is obtained at the pedal support bracket.

2. Remove the pedal pads from the clutch and brake pedals (Fig. 21).

3. Remove the 8 screws that retain the 2 floor covers at the steering column, and remove the covers. Unlatch the engine cover assembly and open.

4. Remove the 8 floor plate retaining screws. Pull the accelerator pedal from the accelerator linkage and remove the floor plate.

5. Disconnect the clutch and brake pedal retracting springs.

6. Loosen the pedal support bracket clamp bolt. Remove the cotter pins and clevis pins from the clutch and brake pedals.

7. Turn the front wheels full left. Through the left front fender apron, remove the locking pin from the clutch pedal and remove the pedal. Push the pedal shaft toward the centerline of the truck. From inside the cab, slide the pedal shaft and clutch pedal lever to the right and out of the support bracket. Remove the brake pedal from the support bracket, then remove the bushings from the pedal and the pedal support bracket.

Installation

1. Coat all bushings and the pedal shaft with a small quantity of Lubriplate or an equivalent lubricant. Install new bushings in the pedal support bracket and the brake pedal.

2. Position the brake pedal in the support bracket, and slide the pedal shaft and clutch pedal lever through the bracket and pedal.

3. Through the left front fender apron, install the clutch pedal on the shaft and secure it with a new locking pin.

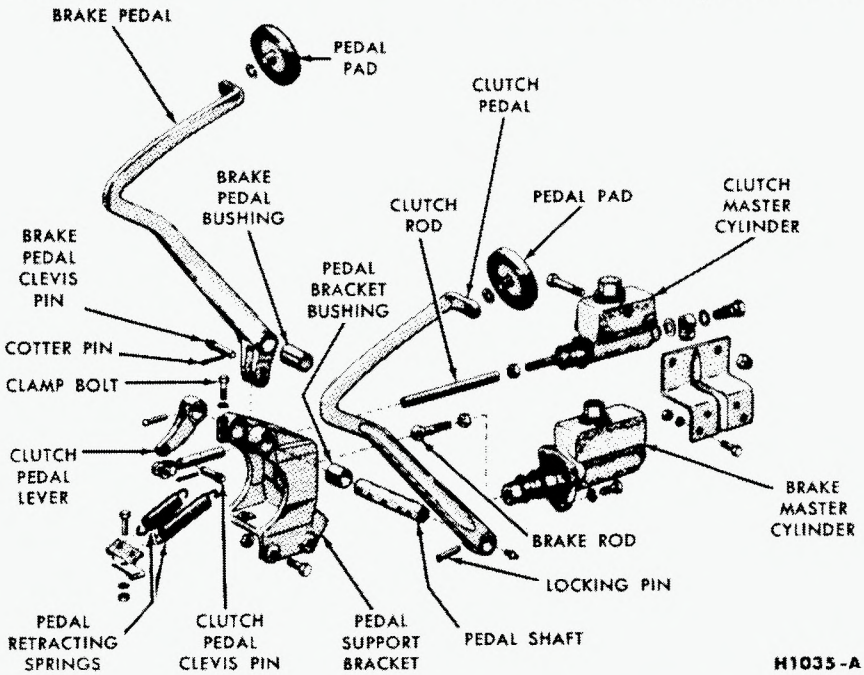

FIG. 21—P-Series Brake Pedal and Related Parts

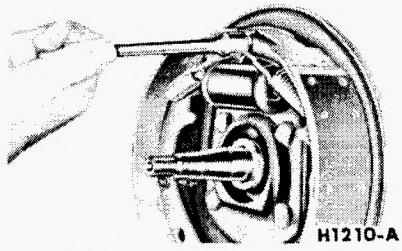

FIG. 22—Retracting Spring Removal

4. Position the clutch rod on the clutch pedal lever, install the clevis pin and secure it with a new cotter pin.

5. Position the brake master cylinder push rod in the brake pedal, install the clevis pin and secure it with a new cotter pin.

6. Install the clutch and brake pedal retracting springs.

7. Adjust the brake pedal by removing the clevis pin from the master cylinder push rod and turning the hex head of the push rod until the specified free travel is obtained.

BRAKE SHOE, ADJUSTING SCREW, AND LINING

REMOVAL

Falcon and Econoline

1. Remove the wheel and brake drum and install a clamp over the ends of the brake cylinder. If the

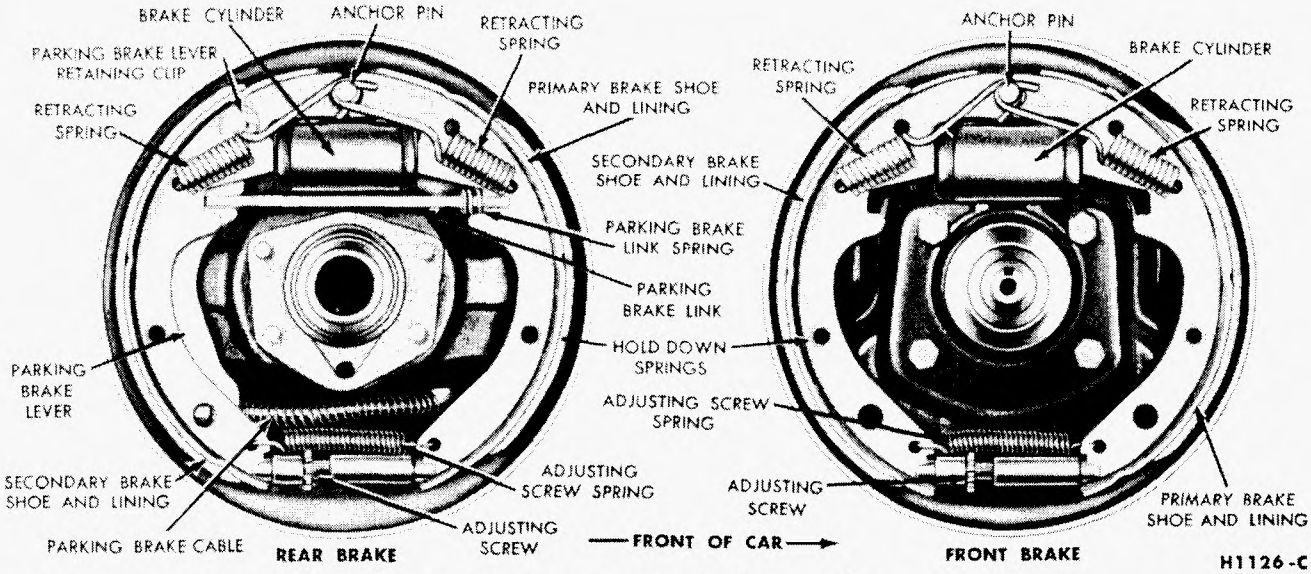

FIG. 23—Falcon Front and Rear Brakes—Typical of Econoline

brake drum will not come off, back off the brake shoe adjustment.

2. Disconnect the brake shoe retracting springs, using a special tool, as shown in Fig. 22. Remove the hold down springs (Fig. 23).

On the rear brakes, disconnect the secondary brake shoe from the parking brake lever by removing the retaining clip (Fig. 23). Remove the parking brake lever link and spring from between the lever and the primary shoe, then remove the brake shoes from the carrier plate.

Do not press the brake pedal down with the brake drums removed.

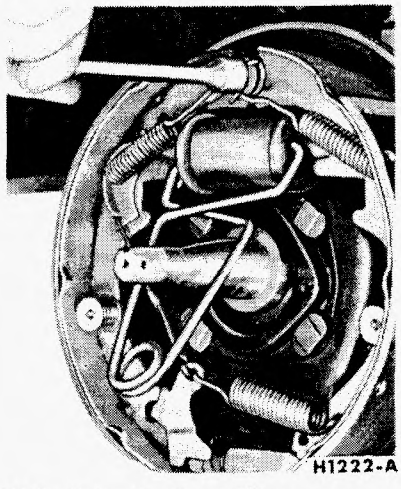

FIG. 24—Retracting Spring Removal—Self-Adjusting

3. Remove the adjusting screw spring and the adjusting screw assembly, then separate the brake shoes.

Fairlane, Galaxie, and Thunderbird

1. Remove the wheel and brake drum and install a clamp over the ends of the brake cylinder (Fig. 24). If the brake drum will not come off, insert a narrow screwdriver through the brake adjusting hole in the carrier plate, and disengage the adjusting lever from the adjusting screw. While thus holding the adjusting lever away from the adjusting screw, back off the adjusting screw with the brake adjusting tool (Fig. 25). **Back off the adjustment only if the drum cannot be removed. Be very careful not to burr, chip, or damage the notches in the adjusting screw; otherwise, the self-adjusting mechanism will not function properly.**

2. Contract the brake shoes as follows: Disengage the adjusting lever from the adjusting screw by pulling backward, toward the rear of the car, on the adjusting lever (Fig. 26). Move the outboard side of the adjusting screw upward, and back off the pivot nut as far as it will go. Move the shoes apart sufficiently to remove the adjusting screw, pivot nut and socket.

3. Pull the adjusting lever, cable, and the automatic adjuster spring down and toward the rear to unhook the pivot hook from the large hole in the secondary shoe web. **Do not attempt to pry the pivot hook out of the hole.**

4. Remove the automatic adjuster spring and adjusting lever (Fig. 26). On Fairlane front brakes, remove the shoe retracting assist spring.

5. Remove the secondary shoe to anchor spring with the tool shown in Fig. 24. With the same tool, remove the primary shoe to anchor spring and unhook the cable anchor. Remove the anchor pin plate (Galaxie and Thunderbird). Remove the tension spring (Thunderbird).

6. Remove the cable guide from the secondary shoe (Fig. 26). Remove the shoe hold down springs and shoes.

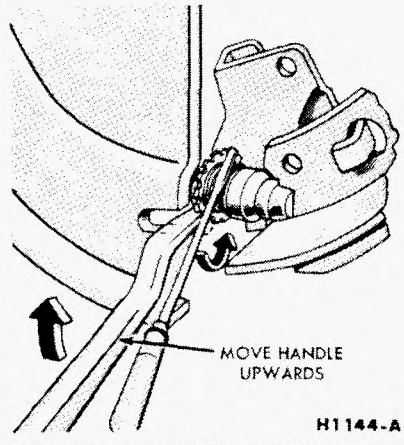

FIG. 25—Backing Off Brake Adjustment

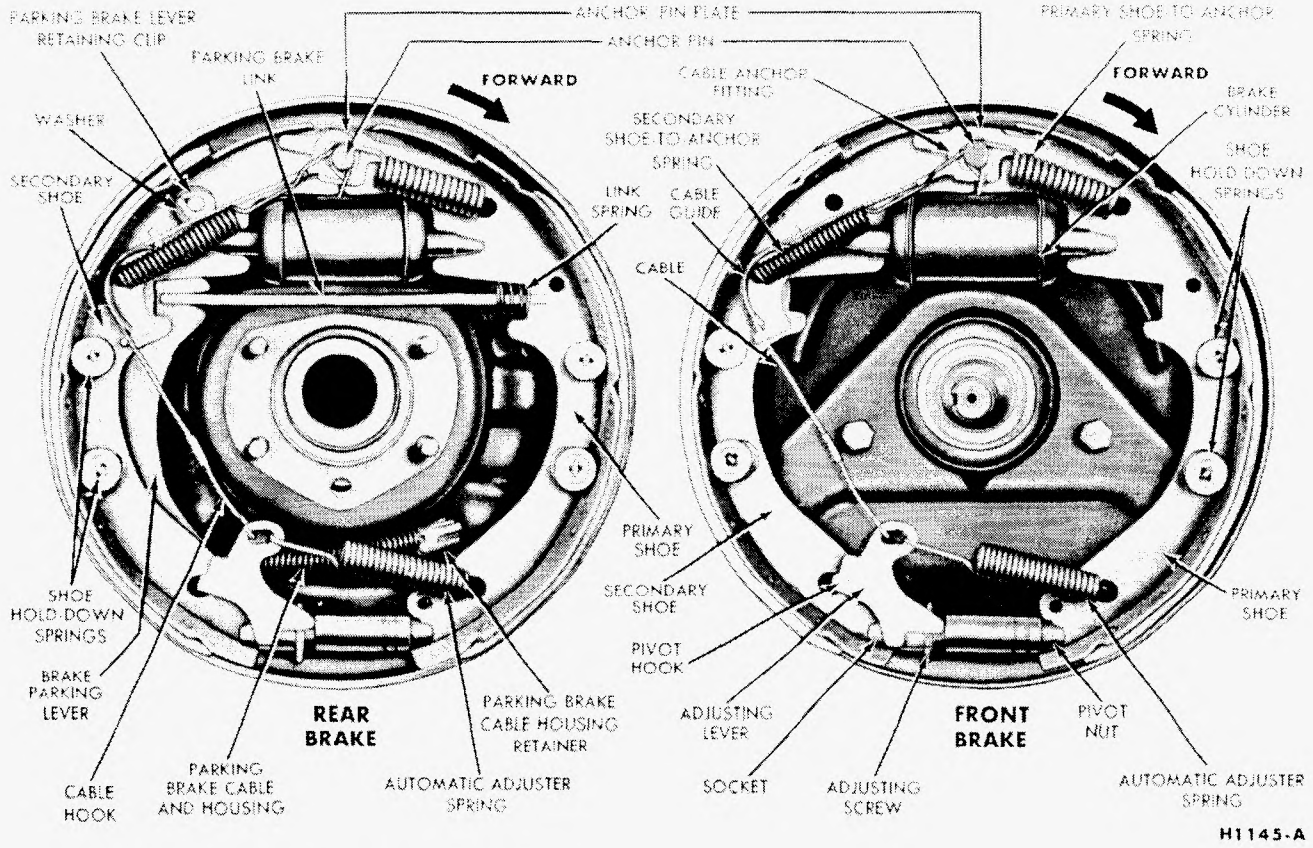

FIG. 26—Typical Self Adjusting Brakes

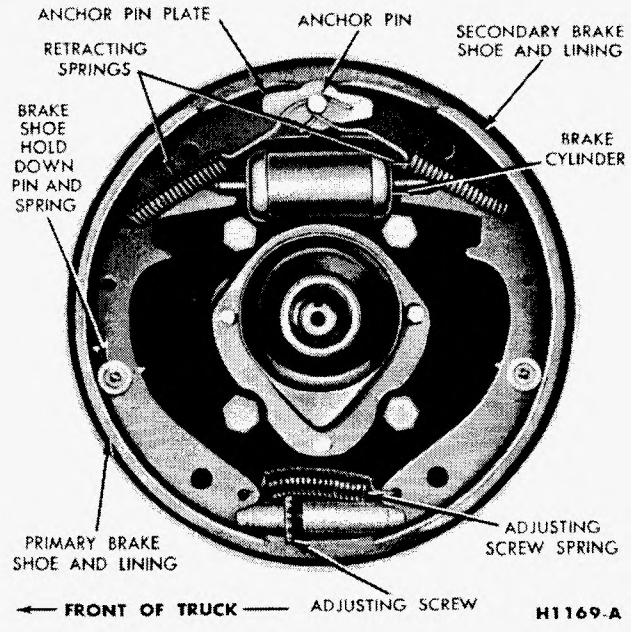

FIG. 27—Duo-Servo Single Anchor Brake Assembly

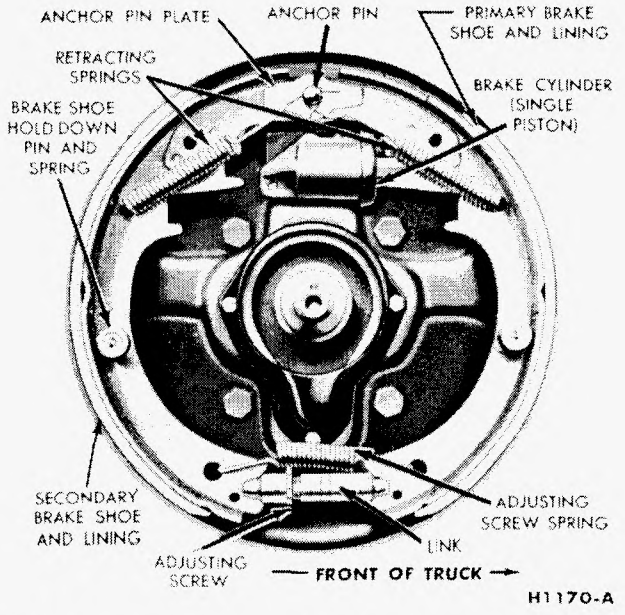

FIG. 28—Uni-Servo Single Anchor Brake Assembly

7. On rear brakes, remove the parking brake link and spring. Disconnect the parking brake cable from the parking brake lever. Disassemble the parking brake lever from the secondary shoe (primary shoe on Thunderbird) by removing the retaining clip and spring washer (Fig. 26).

TRUCKS

1. Raise the truck until the wheels clear the floor. Remove the wheel and drum. If the brake drum will not come off, back off the brake shoe adjustment. **Do not push down the brake pedal after the brake drum has been removed.**

On trucks equipped with a vacuum booster, be sure the engine is stopped and there is no vacuum in the system before disconnecting the hydraulic lines.

2. Clamp the brake cylinder boots against the end of the cylinder, and remove the brake shoe retracting springs from both shoes.

3. Remove the anchor pin plate (Fig. 27 or 28).

4. Remove the hold down spring cups and springs from the shoes, and remove the shoes and the adjusting screw parts from the carrier plate. **Do not let oil or grease touch the brake linings.** If the shoes on a rear brake assembly are being removed, remove the parking brake lever, link, and spring with the shoes. Unhook the parking brake cable from the lever as the brake shoes are being removed.

5. Remove the hold down spring pins from the carrier plate.

6. Remove the adjusting screw parts from the brake shoes. If the shoes are from a rear brake assembly, remove the parking brake lever from the secondary shoe.

INSTALLATION

Falcon and Econoline

1. Apply a LIGHT coating of Ford high-temperature grease to the brake shoe-to-carrier plate contact points and on the threaded portion of the adjusting screw. Thread the adjusting screw onto the nut. Position the brake shoes so that the secondary shoe will be at the rear when placed in position against the carrier plate.

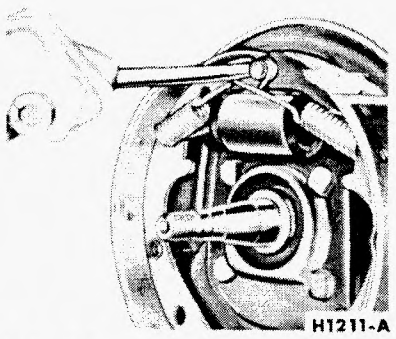

FIG. 29—Retracting Spring Installation

2. Insert the brake adjusting screw (Fig. 23) between the lower ends of the brake shoes so that the star wheel will be directly opposite the carrier plate adjusting hole. Install the spring at the lower end of the shoes.

3. Place the shoe assembly in position against the carrier plate with the upper end of the shoes in line with the anchor pin, and with the brake cylinder links in their appropriate slots in the shoes. Secure the assembly with the hold down springs.

On rear brakes, engage the secondary shoe with the pin on the parking brake lever and secure with the retaining clip (Fig. 23). Install the parking brake link and spring between the lever and the primary shoe.

4. Install the secondary shoe retracting spring, followed by the primary shoe retracting spring (Fig. 29).

5. Remove the brake cylinder clamp and wipe any dust off the front wheel spindle. Clean excess wheel bearing grease or dust from the spindle. Install the wheel and brake drum. Bleed and adjust the brakes.

Fairlane, Galaxie, and Thunderbird

1. Before installing the rear brake shoes, assemble the parking brake lever to the secondary shoe (primary shoe on Thunderbird) and secure with the spring washer and retaining clip.

2. Apply a LIGHT coating of high-temperature grease at the points where the brake shoes contact the carrier plate. Position the brake shoes on the carrier plate and install the hold down spring pins, springs, and cups. On the rear brake, install the parking brake link and spring. Connect the parking brake cable to the parking brake lever.

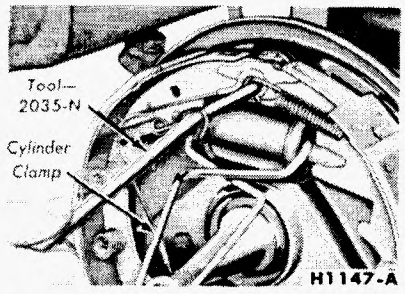

FIG. 30—Retracting Spring Installation—Self-Adjusting

3. Install the tension spring on the anchor pin, with the concave side of the spring toward the shoes (Thunderbird only).

Install the anchor pin plate on the anchor pin (Galaxie and Thunderbird only).

Place the cable anchor over the anchor pin, with the crimped side toward the carrier plate.

4. Install the primary shoe to anchor spring with the tool shown in Fig. 30. Install the cable guide in the secondary shoe web, with the flanged hole fitted into the hole in the secondary shoe web. Thread the cable around the cable guide groove (Fig. 26).

It is imperative that the cable be positioned in this groove and not between the guide and the shoe web.

5. Install the secondary shoe to anchor spring (Fig. 30). **Be certain that the cable end is not cocked or binding on the anchor pin when installed. All parts should be flat on the anchor pin.** Remove the brake cylinder clamp.

On Fairlane front brakes, install the shoe retracting assist spring.

6. Apply high-temperature grease to the threads and the socket end of the adjusting screw. Turn the adjusting screw into the adjusting pivot nut to the limit of the threads, then back off 1/2 turn.

Interchanging the brake shoe adjusting screw assemblies from one side of the car to the other would cause the brake shoes to retract rather than expand each time the automatic adjusting mechanism is operated. To pre-

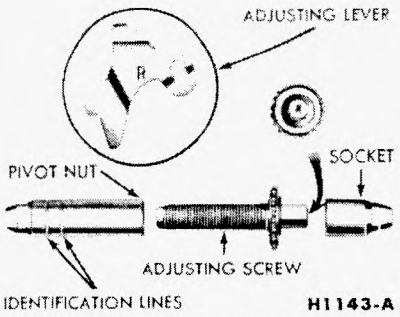

FIG. 31—Adjusting Screw and Lever Identification

vent installation on the wrong side of the car, the socket end of the adjusting screw is stamped with an R or L (Fig. 31). The adjusting pivot nuts can be distinguished by the number of lines machined around the body of the nut. **Two lines indicate a right-hand nut, and one line indicates a left-hand nut.**

7. Place the adjusting socket on the screw and install this assembly between the shoe ends, with the adjusting screw nearest the secondary shoe.

8. Hook the cable hook into the hole in the adjusting lever from the carrier plate side. The adjusting levers are stamped with an R or L to indicate their installation on a right or left hand brake assembly (Fig. 31).

9. Position the hooked end of the adjuster spring into the large hole in the primary shoe web, and connect the loop end of the spring to the adjuster lever hole. Pull the adjuster lever, cable, and automatic adjuster spring down and toward the rear to engage the pivot hook in the large hole in the secondary shoe web (Fig. 26).

10. After installation, check the action of the adjuster by pulling the section of the cable between the cable guide and the adjusting lever toward the secondary shoe web far enough to lift the lever past a tooth on the adjusting screw wheel. The lever should snap into position behind the next tooth, and releasing the cable should cause the adjuster spring to return the lever to its original position. This return action of the lever will turn the adjusting screw one tooth.

If pulling the cable does not produce the action described, or if the lever action is sluggish instead of positive and sharp, check the position of the lever on the adjusting screw toothed wheel. With the brake in a vertical position (anchor pin at the top), the lever should contact the adjusting wheel 3/16-inch (plus or minus 1/32-inch) above the centerline of the screw. If the contact point is below this centerline, the lever will not lock on the wheel, and the screw will not be turned as the lever is actuated by the cable.

To determine the cause of this condition:

a. Check the cable and fittings. The cable should completely fill or extend slightly beyond the crimped section of the fittings. If it does not meet this specification, possible damage is indicated and the cable assembly should be replaced.

b. Check the cable length. The cable should measure 11-1/8 inches (plus or minus 1/64-inch) from the end of the cable anchor to the end of the cable hook.

c. Check the cable guide for damage. The cable groove should be parallel to the shoe web, and the body of the guide should lie flat against the web. Replace the guide if it shows damage.

d. Check the pivot hook on the lever. The hook surfaces should be square with the body of the lever for proper pivoting. Repair the hook or replace the lever if the hook shows damage.

e. See that the adjusting screw socket is properly seated in the notch in the shoe web.

11. Bleed the system, and perform a brake adjustment.

Trucks

1. Place the adjusting screw, socket, and nut on the brake shoes so that the star wheel on the screw is opposite the adjusting hole in the carrier plate, then install the adjusting screw spring (Figs. 27 and 28).

2. Position the brake shoes and the adjusting screw parts on the carrier plate, and install the hold down spring pins, springs, and cups. When assembling a rear brake, connect the parking brake lever to the secondary shoe, and install the link and spring with the shoes. Be sure to hook the parking brake cable to the lever.

3. Install the anchor pin plate on the pin.

4. Install the brake shoe retracting springs on both shoes, being careful not to bend the hooks or to stretch the springs beyond the attaching points. **The primary shoe spring must be installed first.**

5. Remove the clamp from the brake cylinder boots.

6. Install the wheel and drum.

7. Bleed the system and adjust the brakes. Check the brake pedal operation after bleeding the system, then lower the truck.

CLEANING AND INSPECTION

1. Wash all the parts except the brake shoes in solvent and dry with compressed air.

2. Inspect the brake shoes for excessive lining wear or shoe damage. If the lining is worn to within 1/32-inch of the rivet heads, or if the shoes are damaged, they must be replaced. Failure to replace worn linings will result in a scored drum. Replace any lining that has become saturated with grease or oil. If any of the brake linings require replacing, replacement must be made in sets of two—both front or both rear wheels. Prior to replacing a lining, check the drum diameter to determine if oversize linings must be installed.

3. Inspect the brake shoes for distortion, cracks, or looseness. If any of these conditions exist, discard the brake shoe. **Do not repair a defective brake shoe.**

4. Inspect the dust boots on the brake cylinders for signs of deterioration. A deteriorated dust boot can cause failure of the hydraulic system and can permit dust and water to enter the brake cylinder.

5. Inspect the condition of the hydraulic fluid by using litmus paper to determine the degree of alkalinity or acidity. If the hydraulic fluid becomes acid, it will pit the brake cylinder. If the hydraulic fluid becomes alkaline, it will attack the aluminum piston and will cause deposits on the brake cylinder walls. In either case, replace the parts so affected.

6. Inspect the self-adjusting cables for rust, or for a condition of binding. Clean or replace a rusted cable and lubricate the cable guide with a rust inhibiting lubricant.

7. Inspect the carrier plate for worn ledges. If the ledges (brake

shoe rubbing surfaces) are deeply scored or worn unevenly to the point where they are not making full contact with the brake shoes, replace the carrier plate.

8. Inspect all other brake parts for damage and replace as required.

9. Clean the ledges on the carrier plate with sandpaper. Brush all dust from the carrier plates and from the interior of the brake drums. Coat all points of contact between the brake shoes and the other brake assembly parts with high-temperature grease. Lubricate the adjusting screw threads.

BRAKE SHOE LINING

Brake linings that are worn to within 1/32-inch of the rivets, or have been saturated with grease or oil, should be replaced. Failure to replace worn linings will result in a scored drum. **When it is necessary to replace linings, they must also be replaced on the wheel on the opposite side of the car.**

Inspect the brake shoes for distortion, cracks, or looseness. If this condition exists, the shoe should be discarded. **Do not attempt to repair a defective brake shoe.**

1. Wash the brake shoes thoroughly in a clean solvent and remove all burrs or rough spots from the shoes. Check the inside diameter of the brake drum. Install standard or oversize linings according to the specified standard or oversize installation limits.

2. Position the new lining on the brake shoe. Starting in the center, insert and secure the rivets, working alternately toward each end. Install all parts supplied in the kit. **Ford replacement linings are ground, and no further grinding is required. If other than Ford replacement linings are used, it may be necessary to grind them to size.**

3. Check the clearance between the shoe and the lining. The lining must seat tightly against the shoe, with not more than 0.005-inch clearance between any two rivets.

BRAKE CYLINDER REPLACEMENT

REMOVAL

1. With the wheel in a raised position, remove the wheel and brake drum. Place a clamp over the ends of the brake cylinder (Fig. 24).

2. Remove the brake shoe assemblies following the procedure under "Brake Shoe, Adjusting Screw, and Lining."

3. Disconnect the brake line from the brake cylinder, and submerge the end of the brake line in a can containing a small amount of brake fluid. This will minimize hydraulic line bleeding. To disconnect the hose at the front of the cylinder, loosen the pipe fitting that connects the opposite end of the hose to the brake tube at a bracket on the frame. Remove the horseshoe-type retaining clip from the hose and bracket, disengage the hose from the bracket then unscrew the entire hose assembly from the front brake cylinder.

At a rear cylinder, unscrew the pipe fitting that connects the tube to the cylinder. **On a car or truck with a vacuum brake booster, be sure the engine is stopped and there is no vacuum in the system before disconnecting the hydraulic lines.**

4. Remove the brake cylinder retaining bolts and lock washers and remove the cylinder. On a Galaxie front wheel, remove the nut and washer that retain the cylinder to the anchor pin. Remove the clamp from the cylinder.

INSTALLATION

1. On a Galaxie, when installing the front brake cylinder, position the cylinder on the anchor pin against the carrier plate. Install the washer and cylinder retaining nut on the anchor pin. Torque the nut to specifications. On the rear wheel, insert the cylinder into the opening on the carrier plate and install the retaining bolts and lock washers.

On all other cars and trucks, insert the cylinder into the opening on the carrier plate and install the retaining bolts and lock washers. Install a front brake cylinder with the inlet toward the rear of the car.

2. On a front cylinder, install a new copper gasket over the hose fitting. Screw the hose assembly into the cylinder. Engage the opposite end of the hose to the bracket on the frame. Install the horseshoe-type retaining clip, and connect the brake tube to the hose with the tube fitting nut. Tighten the nut to specifications with tool 1112-144.

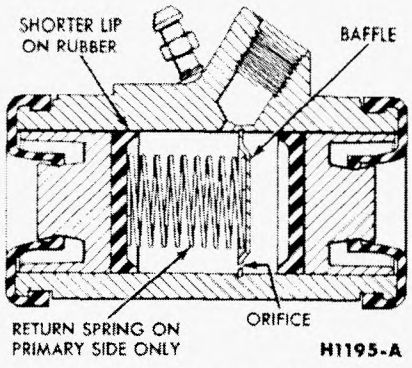

FIG. 32—Falcon and Fairlane Front Brake Cylinder

On a rear cylinder, connect the tube to the cylinder by tightening the tube fitting nut to the cylinder. Tighten the nut to specifications with tool 1112-144.

3. On a Falcon, install the shoe and lining assemblies, following the procedure under "Brake Shoe, Adjusting Screw, and Lining."

On all other cars and trucks, install the links in the ends of the brake cylinder and install the shoes. Install the adjuster assemblies, if so equipped, as described in "Brake Shoe, Adjusting Screw, and Lining."

4. Install the brake drum and wheel. Bleed the brakes and adjust the shoes.

BRAKE CYLINDER OVERHAUL

On a Falcon or Fairlane, the front brake cylinder has a fixed baffle built into the cylinder between the two rubber piston cups (Fig. 32). Because of this baffle, the cylinder can not be honed. Therefore, if inspection indicates the need for honing, the cylinder will have to be replaced. If honing is not indicated, all parts except the baffle can be replaced without removing the cylinder.

For rear brake cylinders on the Falcon, and for all brake cylinders on all other cars and trucks, it is not necessary to remove the cylinder from the carrier plate to disassemble, inspect, or hone and overhaul. Removal is necessary only when the cylinder is damaged or scored beyond repair.

DISASSEMBLY

Remove the wheel, hub, and drum assembly. Remove the

brake shoes, as described in "Brake Shoe, Adjusting Screw, and Lining." Remove the links (all cars and trucks except Falcon) and the rubber boots from the ends of the brake cylinder. Remove the pistons, cups, and return spring from the cylinder bore (Fig. 33). Remove the bleeder screw from the cylinder.

CLEANING AND INSPECTION

Wash all parts in clean denatured alcohol and dry with compressed air.

Check all internal parts for excessive wear or damage. **If any of the internal parts require replacing, all should be replaced.**

Inspect the cylinder bore for scores and rust. If either condition is present, the cylinder bore must be honed (Except Falcon front cylinders). **Do not hone the cylinder bore more than 0.003-inch beyond its original diameter.**

Check the bleeder hole to be sure that it is open and that the threads have not been damaged.

ASSEMBLY

Apply a coating of heavy-duty brake fluid to all internal parts. Thread the bleeder screw into the cylinder and tighten securely. Insert the return spring, cups, and pistons into their respective positions in the cylinder bore (Fig. 33). Install the links (all cars and trucks except Falcon) and the rubber boots, on the ends of each cylinder. Install the brake shoes, as described in "Brake Shoe, Adjusting Screw, and Lining." Install the wheel and drum, bleed the hydraulic system, and adjust the brakes.

BRAKE CARRIER PLATE REPLACEMENT

REMOVAL

All Cars, Econoline, and 100-Series Trucks Except 4-Wheel Drive—Front

1. Remove the wheel and brake drum. Disconnect the brake line from the brake cylinder and submerge the end of the brake line in a can containing a small amount of brake fluid. This will minimize hydraulic line bleeding. Remove the brake shoes and the brake cylinder. On the rear wheels, disconnect the parking brake lever from the cable.

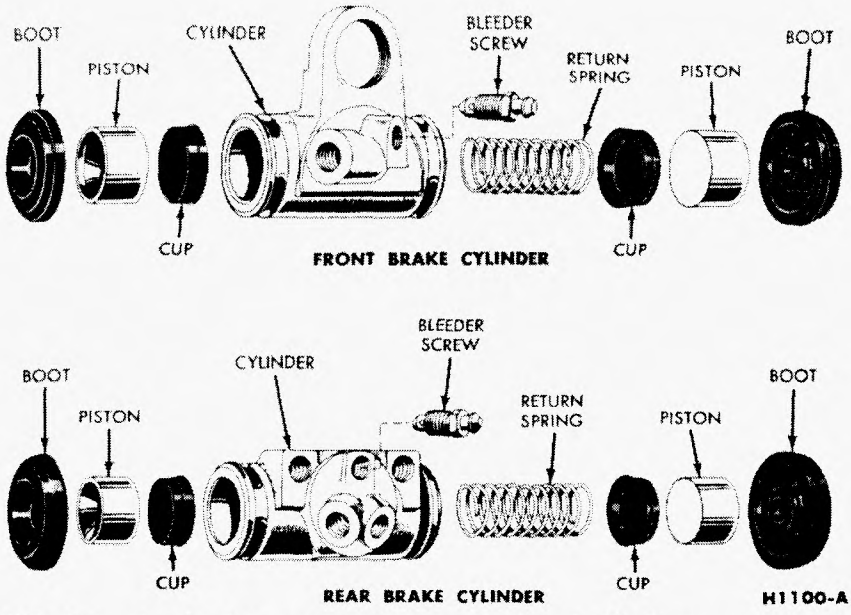

FIG. 33—Typical Front and Rear Brake Cylinders

2. If the rear carrier plate is being replaced, rotate the axle shaft so that the hole in the axle shaft flange aligns with the carrier plate retaining nuts, then remove the nuts. Pull the axle shaft assembly out of the housing with tool 4235-A (Econoline), tool T60K-4234-A (Falcon), or tool 4235-C (Fairlane, Galaxie, Thunderbird, and 100-Series Trucks), and a slide hammer (Fig. 34). Lift off the carrier plate.

If the front carrier plate is being replaced, remove the bolts and nuts that secure the plate to the front wheel spindle and lift off the plate.

250-through 400-Series Trucks Except 4-Wheel Drive—Front

1. Remove the wheel and tire.

2. On front wheels, remove the grease cap, wheel bearing adjusting nut, washer and outer bearing, then remove the hub and drum assembly from the spindle.

On rear wheels, remove the rear axle shaft flange retaining nuts, the axle shaft, the stud adjusters, and the outer grease seal. Remove the rear wheel bearing lock nut, lock washer, and adjusting nut, then remove the hub and drum assembly from the axle housing.

3. Remove the brake shoes and adjusting screw from the carrier plate (See "Brake Shoe, Adjusting Screw, and Lining"). Disconnect the brake line from the brake cylinder and submerge the end of the brake line in a can containing a small amount of brake fluid. This will minimize hydraulic line bleeding.

4. Remove the carrier plate retaining bolts and nuts, then remove the carrier plate from the front wheel spindle or rear axle housing.

5. Remove the retaining bolts and lock washers, and the brake cylinder from the carrier plate.

Trucks With 4-Wheel Drive—Front

1. Raise the truck on a hoist.

2. Remove the hub grease cap. Remove the hub retaining snap ring, and slide the splined driving hub from between the axle shaft and the wheel hub. Remove the driving hub spacer.

3. With tool T59T-1197-B, remove the lock nut, washer, and wheel bearing adjusting nut from the steering spindle. Remove the

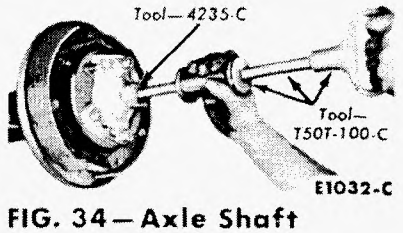

FIG. 34—Axle Shaft Removal

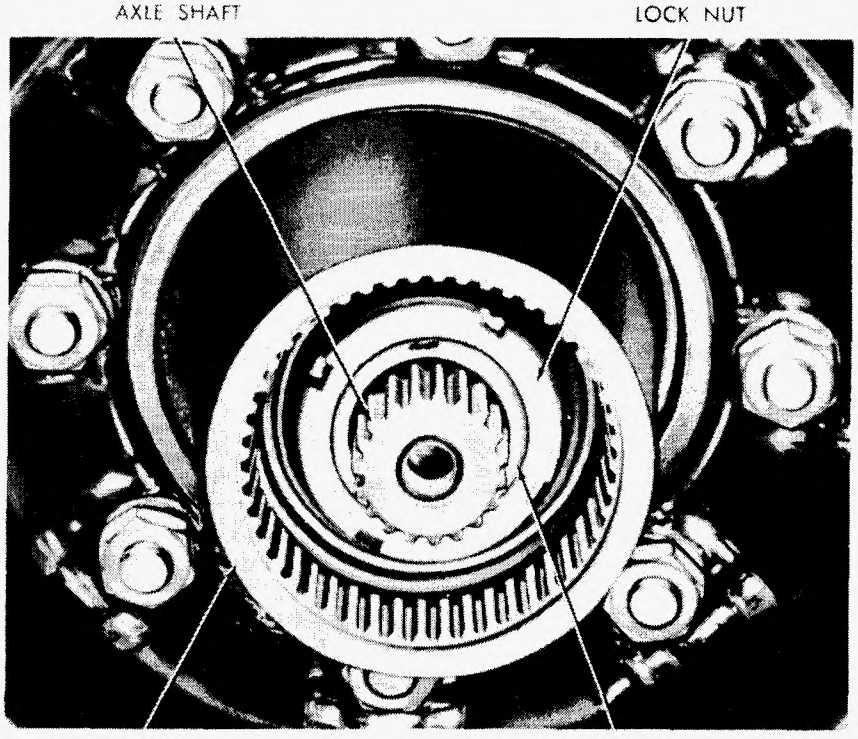

FIG. 35—Front Wheel Hub—4-Wheel Drive

wheel, hub and drum as an assembly (Fig. 35). The wheel outer bearing will be forced off the spindle at the same time. Remove the wheel inner bearing cone.

4. Place a drain pan under the spindle arm assembly. Remove the oil baffle from the brake carrier plate.

5. Remove the cap screws which retain the brake carrier plate and spindle to the spindle arm. Remove the brake carrier plate and spindle (Fig. 36).

INSTALLATION

All Cars, Econoline, and 100-Series Trucks Except 4-Wheel Drive—Front

1. Position the rear carrier plate on the retaining bolts in the axle housing flange. Insert the axle shaft assembly into the housing so that the splines engage the differential side gear, with the bearing retainer sliding onto the retaining bolts and against the carrier plate. Install the retaining nuts through the access hole in the axle shaft flange.

Position the front carrier plate on the wheel spindle and install the retaining bolts and nuts.

2. Install the brake cylinder and brake shoes. On a rear brake, connect the parking brake cable to the lever.

3. Connect the brake line to the brake cylinder, then install the wheel and brake drum. Adjust the brake shoes and bleed the hydraulic system.

250-through 400-Series Trucks Except 4-Wheel Drive—Front

1. Assemble the brake cylinder to the carrier plate with the retaining bolts and lock washers.

2. Mount the carrier plate to the front wheel spindle or to the rear axle housing flange, and secure with the retaining bolts and nuts.

3. Install the brake shoes and adjusting screw to the carrier plate. Connect the brake line to the brake cylinder.

4. Install a front wheel hub and drum assembly to the spindle. Install the outer wheel bearing, washer, and adjusting nut. Adjust the front wheel bearings. Install the grease cap.

Install a rear wheel hub and drum assembly on the rear axle housing. Install the outer bearing and the adjusting nut, then adjust the wheel bearings. Install the lock washer and lock nut, then torque to specifications. Install the oil seal, rear axle shaft and gasket, stud adapters, and retaining nuts, then torque to specifications.

5. Install the wheel and tire.

6. Bleed the hydraulic system and adjust the brake shoes.

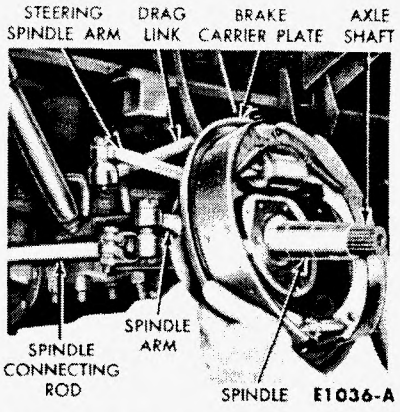

FIG. 36—Brake Carrier Plate Removal or Installation

Trucks With 4-Wheel Drive—Front

1. Position the spindle and the brake carrier plate on the steering arm, and then install the retaining cap screws (Fig. 36). Install the oil baffle.

2. Install the wheel inner bearing cone on the spindle. Install the wheel hub and drum. Install the driving hub spacer and then the wheel outer bearing cone and adjusting nut.

3. Rotate the wheel in both directions and at the same time tighten the bearing adjusting nut with tool T59T-1197-A, to bring the bearing rollers into proper contact. After the bearings are firmly seated, back off the adjusting nut 1/8 turn (45°). Place the bearing adjusting lock washer on the spindle. Make sure the locking dowel on the adjusting nut enters the lock washer hole which most closely aligns with the dowel. Install the lock nut and torque to 40 foot-pounds (Fig. 35).

4. Install the driving hub and snap ring. Install the grease cap.

5. Fill the spindle arm with the proper grade and amount of lubricant.

2 PARKING BRAKE REPAIR

PEDAL ASSEMBLY REPLACEMENT (GALAXIE AND THUNDERBIRD)

REMOVAL

1. Remove the set screw that retains the release cable to the pedal assembly. Remove the three bolts that retain the parking brake pedal to the dash side panel (Fig. 37).

2. Press the parking brake pedal assembly down and remove the lock spring clip, clevis pin, and the U-shaped clevis from the pedal assembly. Remove the horseshoe-type clip that retains the parking brake cable housing to the assembly and remove the assembly.

INSTALLATION

1. Insert the parking cable and housing through the hole in the pedal assembly and install the retaining clip. Install the u-shaped clevis over the parking brake ball and position on the actuating lever. Insert the clevis pin and cotter pin and install the lock spring clip.

2. Position the parking brake assembly against the dash side panel and install the three retaining bolts. Torque the bolts to specifications. Install the parking brake release cable and adjust for proper operation (See "Parking Brake Linkage Adjustment").

INSPECTION

Examine the various components of the parking brake assembly. If any parts are bent or damaged, they must be replaced.

PARKING BRAKE LINKAGE ADJUSTMENT (GALAXIE AND THUNDERBIRD)

In most cases, a rear brake shoe adjustment will provide satisfactory parking brake action.

Check the parking brake cables when the brakes are fully released. If the cables are loose, adjust them as follows:

1. Loosen the lock nut on the equalizer rod, then turn the nut in front of the equalizer several turns forward.

2. Turn the lock nut forward against the equalizer until the rear wheel cables are just tight enough to remove the slack (Fig. 38). **Excessive tightening may pull the brake shoes off their anchors.** The drums must rotate freely.

3. When the cables are properly adjusted, tighten both nuts against the equalizer.

4. Check the cable between the equalizer lever and the parking brake control pedal. If the cable is loose, turn the adjusting nut forward far enough to remove the slack in the cable without moving the equalizer lever (Fig. 38).

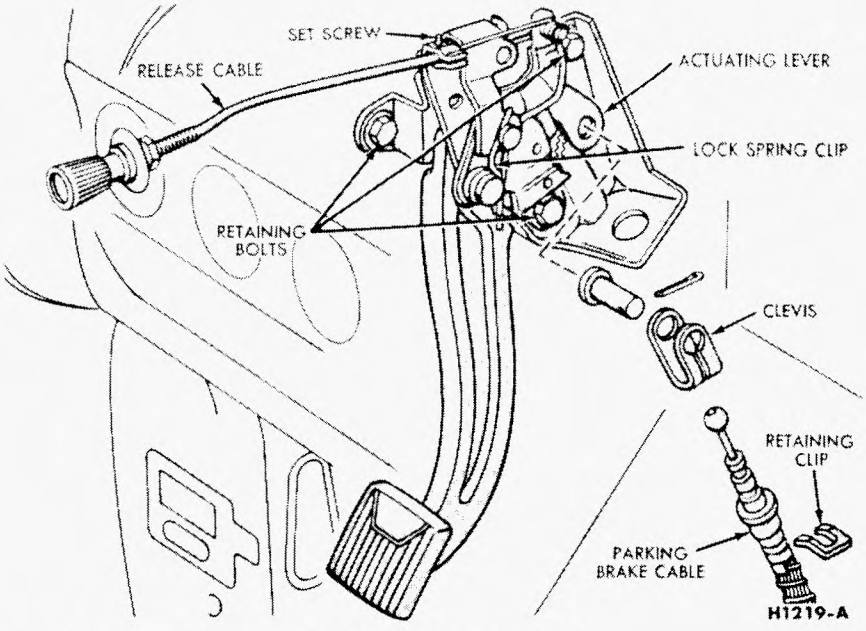

FIG. 37—Parking Brake Pedal Assembly

CONTROL HANDLE ASSEMBLY REPLACEMENT (FAIRLANE)

REMOVAL

1. Remove the hairpin-type retainer and the clevis pin, then remove the cable pulley from the control housing (Fig. 39). Remove the U-shaped clip and disconnect the cable housing from the forward bracket.

2. Push the locking pawl against the spring to disengage the pawl from the ratchet groove in the handle, then push the

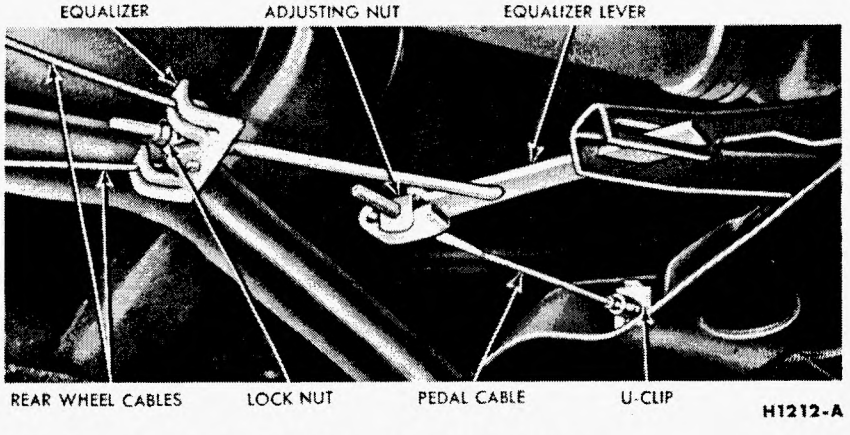

FIG. 38—Galaxie Parking Brake Linkage

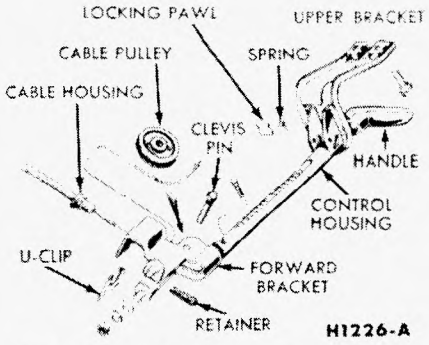

FIG. 39—Control Handle Assembly

handle all the way in. Rotate the handle counterclockwise, then disengage the cable ball from the slot in the handle.

3. From underneath the left front fender, remove the retaining nuts from the forward bracket-to-dash panel mounting studs.

4. Inside the driver compartment, remove the two upper bracket-to-instrument panel bolts, then remove the control handle assembly from the car.

INSTALLATION

1. Position the control assembly so that the forward bracket mounting studs enter the holes in the dash panel, and the upper bracket is aligned with the mounting holes in the instrument panel (Fig. 39).

2. From underneath the left front fender, install the retaining nuts on the forward bracket mounting studs.

3. Inside the driver compartment, install the upper bracket-to-instrument panel mounting bolts. Torque the bolts to specifications.

4. Engage the cable ball with the slot in the handle, turn the handle clockwise, then pull the handle back until the pawl engages the first ratchet groove. Connect the cable housing to the forward bracket with the U-shaped clip.

5. Install the pulley to the cable and the control housing, and secure it in place with the clevis pin and retainer. Adjust the parking brake linkage, as described in "Parking Brake Cable Adjustment (Fairlane)."

INSPECTION

Examine the various components of the parking brake assembly. If any parts are bent or damaged, they must be replaced.

PARKING BRAKE CABLE ADJUSTMENT (FAIRLANE)

In most cases, a rear brake shoe adjustment will provide satisfactory parking brake action.

Check the parking brake cables when the brakes are fully released. If the cables are loose, adjust them as follows:

1. Pull up the handle until the third notch is engaged.

2. Loosen the lock nut on the equalizer rod (Fig. 40), and turn the nut in front of the equalizer several turns forward.

3. Turn the lock nut forward against the equalizer until the cables are just tight enough to stop forward rotation of the rear wheels.

4. When the cables are properly adjusted, tighten both nuts against the equalizer.

5. Release the handle.

HANDLE ASSEMBLY REPLACEMENT (FALCON)

REMOVAL

1. Remove the two screws that hold the handle bracket on the instrument panel. Remove the two nuts and lock washers that secure the control to the dash panel.

2. Remove the clevis pin that secures the pulley to the control handle assembly. Disengage the locking rod and remove the ball on the cable from the slot in the control assembly.

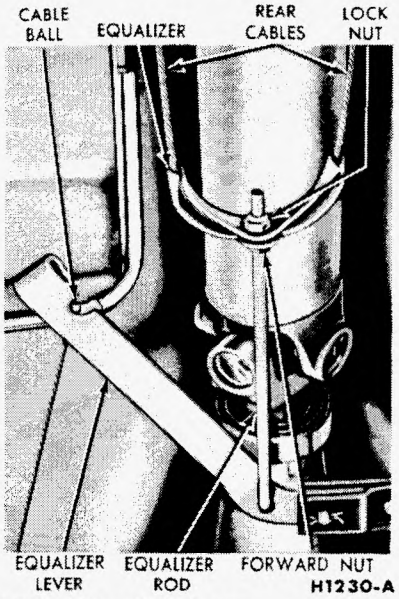

FIG. 40—Fairlane Parking Brake Linkage—Typical of Falcon

INSTALLATION

1. Disengage the locking rod and connect the ball end of the cable to the slot on the handle assembly. Assemble the pulley to the control handle and the clevis pin.

2. Position the assembly against the dash panel and instrument panel. Secure the assembly to the instrument panel with the two screws.

3. From the engine compartment side, install the two lock washers and the retaining nuts on the studs on the control assembly. Torque the nuts to specifications.

4. Adjust the parking brakes as described in "Parking Brake Cable Adjustment (Falcon)."

INSPECTION

Examine the various components of the parking brake assembly. If any parts are bent or damaged, they must be replaced.

PARKING BRAKE CABLE ADJUSTMENT (FALCON)

In most cases, a rear brake shoe adjustment will provide satisfactory parking brake action.

Check the parking brake cables when the brakes are fully released. If the cables are loose, adjust them as follows:

1. Pull up the handle until the third notch is engaged.

2. Loosen the lock nut on the equalizer rod (Fig. 40), and turn the nut in front of the equalizer several turns forward.

3. Turn the lock nut forward against the equalizer until the cables are just tight enough to stop forward rotation of the rear wheels.

4. When the cables are properly adjusted, tighten both nuts against the equalizer.

5. Release the handle.

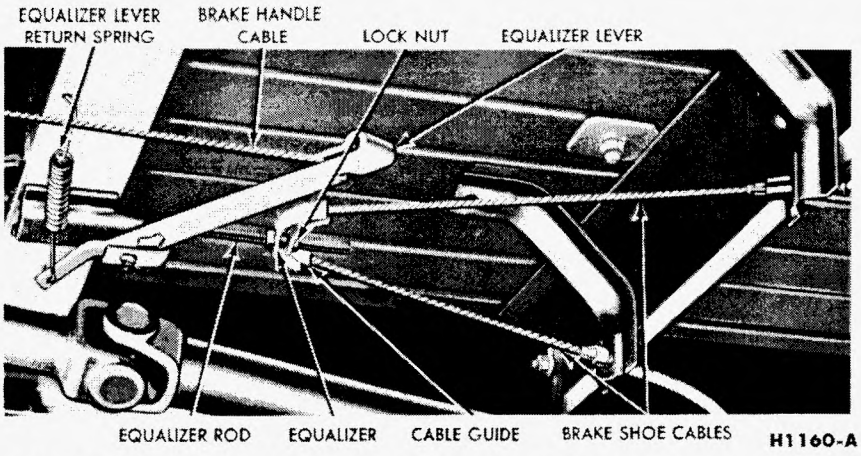

FIG. 41—Econoline Parking Brake Linkage

HANDLE ASSEMBLY REPLACEMENT (ECONOLINE)

REMOVAL

1. Push the equalizer lever slightly forward, and disconnect the ball end of the cable from the lever (Fig. 41).

2. Pull the brake handle up, and disconnect the cable end from the ratchet bar.

3. Remove the lock pin from the ratchet bar, and remove the brake handle from the brake handle housing assembly.

INSTALLATION

1. Position the ratchet bar in the brake handle housing assembly.

2. Install the lock pin in the ratchet bar, and connect the cable end to the ratchet bar.

3. Push the equalizer lever slightly forward, and insert the ball end of the cable in the slot on the equalizer lever (Fig. 41).

4. Adjust the parking brakes as described in "Parking Brake Cable Adjustment (Econoline)."

INSPECTION

Examine the various components of the parking brake assembly. If any parts are bent or damaged, they must be replaced.

PARKING BRAKE CABLE ADJUSTMENT (ECONOLINE)

In most cases, the rear brake shoe adjustment will provide satisfactory parking brake action. Check the parking brake cables when the brakes are fully released. If the cables are loose, adjust them as follows:

1. Pull up the handle until the first notch is engaged.

2. Loosen the lock nut on the equalizer rod (Fig. 41), then turn the nut in front of the equalizer several turns forward.

3. Turn the lock nut forward against the equalizer until there is a medium drag on each rear brake.

4. When the cables are properly adjusted, tighten both nuts against the equalizer.

5. Release the handle.

HANDLE ASSEMBLY REPLACEMENT (F-100—F-250)

REMOVAL

1. Raise the truck. Back off the equalizer adjustment, move the parking brake lever forward, and disconnect the cable ball from the lever (Fig. 42).

2. Remove the pin that retains the cable to the control handle, rotate the control handle, and disconnect the cable from the handle. Pull the control handle from the bracket assembly.

INSTALLATION

1. Insert the control handle into the bracket assembly and connect the ball on the forward end of the cable to the handle. Rotate the control handle and install the lock pin.

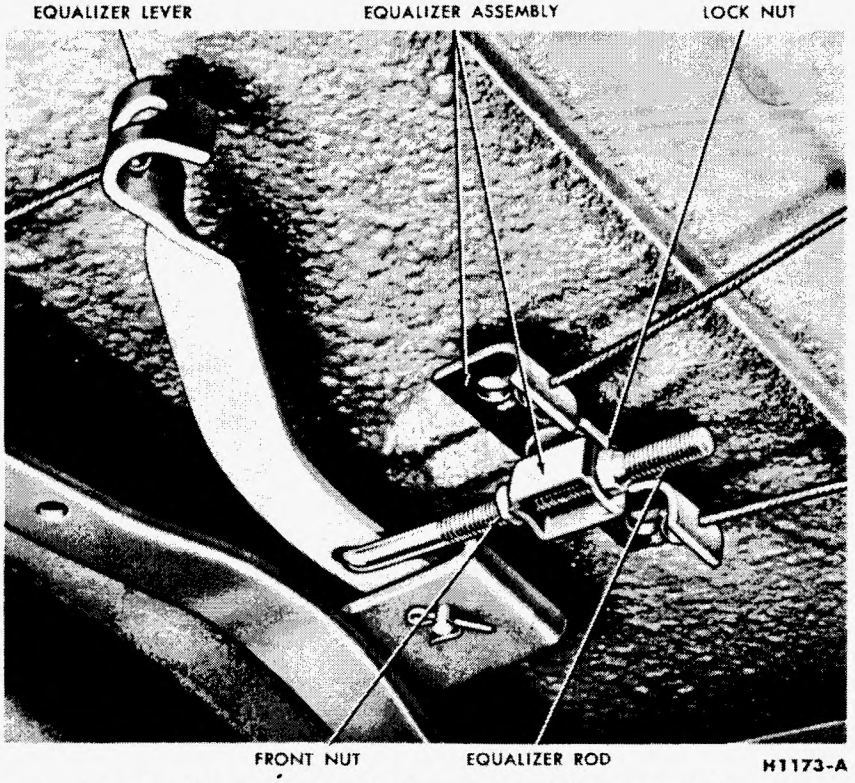

FIG. 42—Parking Brake Linkage—F-100 and F-250

2. Connect the cable rear ball to the parking brake lever and adjust the brake cable at the equalizer, as described in "Cable-Actuated Rear Wheel Parking Brake Adjustment."

3. Lower the truck.

PARKING BRAKE ADJUSTMENT (TRUCKS)

CABLE ACTUATED REAR WHEEL PARKING BRAKE—F-100, F-250 and P-100 and P-350 WITH 5000 LB REAR AXLE

Adjust the service brakes before attempting to adjust the parking brake cables.

Place the parking brake lever in the fully released position, then check for slack in the parking brake two rear cables (Fig. 42).

The cables should be tight enough to provide full application of the rear brake shoes, when the parking brake lever is placed in the fully applied position, yet loose enough to ensure complete release of the brake shoes when the lever is in the released position.

If the cables are loose, adjust them as follows:

1. Loosen the lock nut on the equalizer rod, then turn the nut in front of the equalizer several turns forward.

2. Turn the lock nut forward against the equalizer until the cables are just tight enough to remove the slack. **Excessive tightening may pull the brake shoes off their anchors.**

3. When the cables are properly adjusted, tighten both nuts against the equalizer.

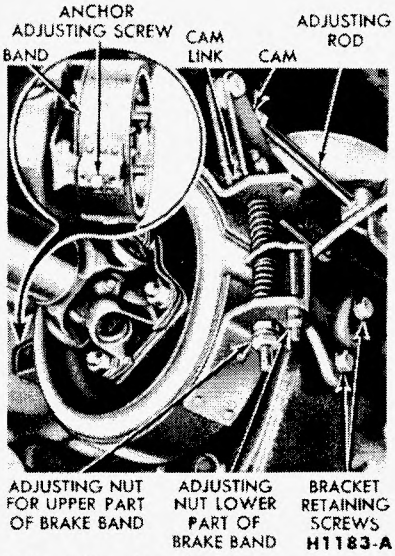

FIG. 43—Typical Band-Type Parking Brake

BAND TYPE PARKING BRAKE

The band type parking brake is used on F-350 and P-400 series trucks, and on P-350 series equipped with a 3-speed H.D. transmission and a 7200 lb. rear axle.

1. With a cable controlled parking brake band (Fig. 43), move the parking brake lever to the fully released position. On a truck with a rod type linkage, set the lever at the first notch.

2. Check the position of the cam to make sure the flat portion is resting on the brake band bracket. If the cam is not flat with the bracket, remove the clevis pin from the upper part of the cam, and adjust the clevis rod to allow the flat portion of the cam to rest on the brake band bracket. Install the clevis pin and cotter pin (Fig. 43).

3. Remove the lock wire from the anchor adjusting screw, and turn the adjusting screw clockwise until a clearance of 0.010-inch is established between the brake lining and the brake drum at the anchor bracket. Install the lock wire in the anchor adjusting screw.

4. Loosen the lock nut on the adjusting screw for the lower half of the brake band, and adjust the screw to establish a 0.010-inch clearance between the lining and the brake drum, at the lower half of the brake band (Fig. 43). Tighten the lock nut.

5. Turn the upper band adjusting rod nut until a 0.010-inch clearance is established between the upper half of the band and the drum.

HANDLE ASSEMBLY REPLACEMENT (P-350—P-400)

REMOVAL

1. Open the radiator grille. Remove the cotter pin and clevis pin, then disconnect the clevis from the control handle.

2. Remove the brake cable-to-clevis retaining clip, loosen the lock nut, and remove the clevis from the brake cable.

3. Remove the control handle assembly upper and lower mounting bolts. The nuts must be held on the outside of the truck, as the lower mounting bolts are removed. Remove the parking brake control handle assembly from the truck.

INSTALLATION

1. Position the parking brake control handle assembly, and install the two upper mounting bolts. Install the two lower mounting bolts while holding the nuts from outside the truck.

2. Install the clevis on the brake cable. Partially tighten the lock nut, and install the clevis retaining clip.

3. Install the clevis pin. Check and adjust the parking brakes (See "Parking Brake Adjustment—Trucks") and tighten the lock nut. Install the cotter pin in the clevis pin. Close the radiator grille.

EQUALIZER TO PEDAL CABLE REPLACEMENT (GALAXIE)

REMOVAL

1. Raise the car and move the parking brake equalizer lever forward far enough to permit removal of the half-moon type adjusting nut. Remove the adjusting nut from the end of the cable (Fig. 38). Remove the U-clip that retains the cable housing to the transmission rear support crossmember. Remove the two cable housing retaining clips at the underside of the floor pan. Pull the cable through the crossmember and the frame side rail, then lower the car.

2. Working inside the car, remove the three retaining bolts that secure the parking brake pedal and release assembly to the dash side panel and remove the assembly.

3. Remove the U-clip that retains the cable housing to the parking brake pedal and release assembly. Remove the cotter pin and clevis pin from the clevis. Rotate and remove the clevis, then remove the cable and housing

from the pedal and release assembly. Push the cable and grommet down through the floor pan.

INSTALLATION

1. Guide the lower end of the replacement cable and grommet down through the floor pan. Position the upper end of the cable into the pedal and release assembly, and secure the cable housing with the U-clip.

2. Install the clevis over the ball on the end of the cable and attach the clevis to the actuating arm by inserting the clevis pin. Install the cotter pin (Fig. 37).

3. Position the pedal and release assembly to the dash side panel and secure with three retaining bolts.

4. Raise the car and route the cable through the frame side rail and through the crossmember. Secure the cable housing to the frame side rail with two retaining clips, one on each side of the side rail. Secure the cable housing to the rear side of the transmission rear support crossmember by installing the U-clip (Fig. 38).

5. Insert the rear end of the cable through the hole in the equalizer lever and install the adjusting nut on the end of the cable. Adjust the parking brake cable and check the operation.

EQUALIZER TO PEDAL CABLE REPLACEMENT (THUNDERBIRD)

REMOVAL

1. Raise the car and move the equalizer lever forward far enough to permit removing the adjusting nut from the end of the cable (Fig. 44). Remove the clip that holds the cable to the frame. Remove the cable retaining clamp. Lower the car.

2. Working inside the car, remove the lock spring clip and clevis pin from the U-shaped clevis and remove the clevis from the actuating lever (Fig. 37). Remove the horseshoe-shaped clip that retains the cable housing to the pedal assembly. Rotate and remove the U-shaped clevis and remove the cable and housing from the pedal assembly.

3. Push the cable and housing down through the hole in the floor pan and remove it from under the car.

INSTALLATION

1. From the underside of the car, guide the upper end of the replacement cable into the hole in the floor pan.

2. From inside the car, pull the new cable and housing up through the hole in the floor pan. Insert the upper end of the cable into the pedal assembly and install the lock spring clip (Fig. 37). Install the U-shaped clevis over the ball on the cable and attach the clevis to the actuating arm by inserting the clevis pin and spring clip.

3. Raise the car and install the cable retaining clamp and the clip that holds the cable to the frame. Insert the cable through the hole in the equalizer lever and install the adjusting nut (Fig. 44). Check the operation of the parking brake and adjust, if necessary.

EQUALIZER TO HANDLE CABLE REPLACEMENT (FALCON)

REMOVAL

1. Remove the two screws that retain the cable clamp to the dash panel. Remove the parking brake handle assembly.

2. Disengage the locking rod and remove the ball on the cable from the slot in the control assembly. Push the cable down through the hole in the dash panel.

3. From the underside of the car, remove the cable and housing from the holes in the left front side member. Remove the horseshoe-type clip and remove the cable from the hole in the frame crossmember. Disengage the cable rear ball from the equalizer lever, then remove the cable from the car (Fig. 40).

INSTALLATION

1. Attach the cable rear ball to the equalizer lever. Thread the forward end of the cable and housing through the two holes in the left front side member.

2. Insert the cable and housing through the hole in the dash panel. Disengage the locking rod and connect the ball end of the cable to the slot in the control assembly. Install the two screws that retain the cable clamp to the dash panel and tighten securely.

3. Install the parking brake handle assembly. Check the parking brake operation and adjust, if necessary.

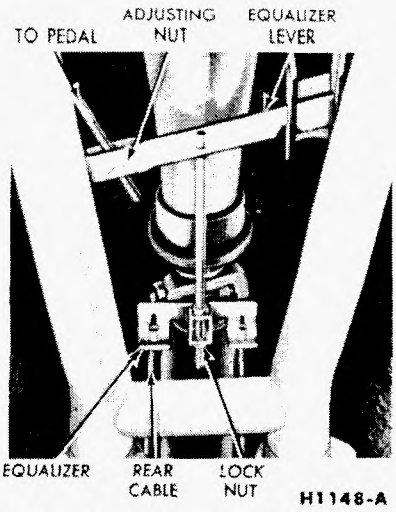

FIG. 44—Thunderbird Parking Brake Linkage

EQUALIZER TO HANDLE CABLE REPLACEMENT (FAIRLANE)

REMOVAL

1. Remove the hairpin-type retainer and the clevis pin, then remove the cable pulley from the control housing (Fig. 39). Remove the U-clip and disconnect the cable housing from the forward bracket.

2. Push the locking pawl against the spring to disengage the pawl from the ratchet groove in the handle, then push the handle all the way in. Rotate the handle counterclockwise, then disengage the cable ball from the slot in the handle.

3. Push the cable and housing down through the hole in the dash panel. From the underside of the car, remove the U-clip that retains the cable housing to the bracket on the crossmember (Fig. 45). Disengage the cable housing from the bracket.

4. Disengage the cable rear ball from the equalizer lever, and remove the cable from the car (Fig. 40).

INSTALLATION

1. Attach the rear end of the cable housing to the bracket with the U-clip (Fig. 45). Attach the cable rear ball to the equalizer lever (Fig. 40).

2. Insert the forward end of the cable and housing through the hole in the dash panel so that the

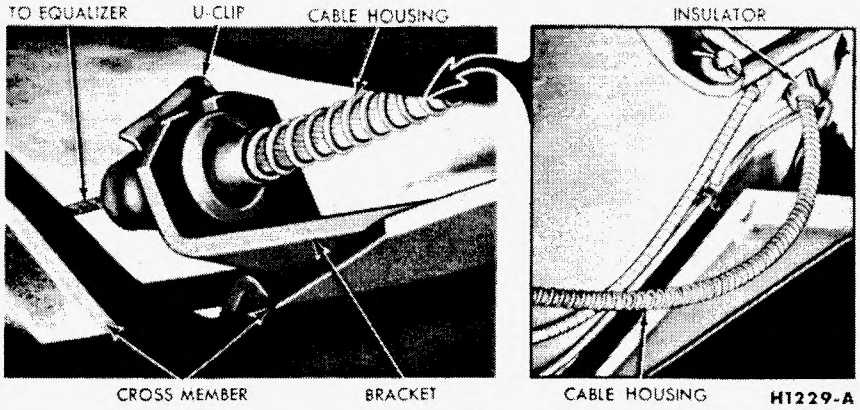

FIG. 45—Equalizer to Handle Cable—Fairlane

rubber insulator encases the housing at the point where it goes through the hole (Fig. 45).

3. Working inside the car, engage the cable ball with the slot in the control handle, turn the handle clockwise, then pull the handle back until the pawl engages the first ratchet groove.

4. Connect the forward end of the cable housing to the control assembly forward bracket. Secure with the U-clip. Install the pulley to the cable and to the control housing, and secure in place with the clevis pin and retainer (Fig. 39). Check the operation of the parking brake and adjust, if necessary.

EQUALIZER TO HANDLE CABLE REPLACEMENT (ECONOLINE)

REMOVAL

1. Raise the truck. Push the equalizer lever forward, and disconnect the rear (ball) end of the cable from the lever (Fig. 41).

2. Pull the handle up and remove the front (ball) end of the cable from the handle. Remove the cotter pin, clevis, and pulley from the guide bracket, and remove the cable.

INSTALLATION

1. Route the new cable down through the handle bracket and connect the cable front (ball) end to the handle. Push the handle to the extreme down position. Position the cable guide pulley and install the clevis and cotter pin.

2. Route the cable rearward. Push the equalizer lever forward and connect the rear (ball) end of the cable to the lever. Adjust the parking brake at the equalizer.

EQUALIZER TO HANDLE CABLE REPLACEMENT (F-100, F-250, P-100 AND P-350)

This procedure applies only to those P-350 series trucks that have a 5000 lb rear axle.

REMOVAL

1. Raise the truck on a hoist. Push the equalizer lever slightly forward, and disconnect the cable rear (ball) end from the lever (Fig. 42).

2. Remove the parking brake cable retaining U-clip at the crossmember.

3. Lower the truck, open the hood, and remove the cable retaining clamp on the fender apron.

4. Remove the cable retaining U-clip at the handle assembly. Remove the cable from the truck.

INSTALLATION

1. Position the new cable through the dash panel and connect it to the parking brake handle assembly. Secure the cable to the handle assembly with the U-clip.

2. Install the cable retaining clamp to the fender apron, and raise the truck on a hoist.

3. Route the cable through the crossmember and secure in place with the U-clip.

4. Push the equalizer lever forward and connect the cable rear (ball) end to the lever. Adjust the parking brake cable at the equalizer assembly.

EQUALIZER TO REAR WHEEL CABLE REPLACEMENT (GALAXIE, THUNDERBIRD, AND F-100, F-250, P-100 AND P-350 TRUCKS)

This procedure applies only to those P-350 trucks that have a 5000 lb rear axle.

REMOVAL

1. Raise the car and remove the hub cap, wheel, and brake drum. Loosen the lock nut on the equalizer rod and disconnect the cable from the equalizer (Figs. 38, 42, or 44).

2. Remove the horseshoe-type clip that retains the cable housing to the frame bracket and pull the cable and housing out of the bracket (Fig. 46).

3. Working on the wheel side (Fig. 26 or 47), compress the prongs on the cable retainer so that they can pass through the hole in the carrier plate. Draw the cable retainer out of the hole.

4. With the spring tension off the parking brake lever, lift the cable out of the slot in the lever, and remove the cable through the carrier plate hole.

INSTALLATION

1. Pull enough of the cable through the housing so that the end of the cable may be inserted over the slot in the parking brake lever. Pull the excess slack from the cable and insert the cable housing into the carrier plate access hole so that the retainer prongs expand (Fig. 26 or 47).

2. Thread the front end of the cable housing through the frame bracket and install the horseshoe-type retaining clip. Insert the ball

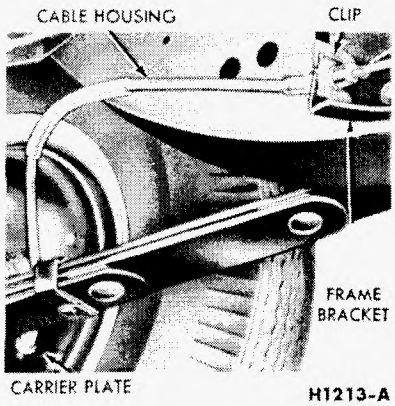

FIG. 46—Rear Wheel Cable Connections

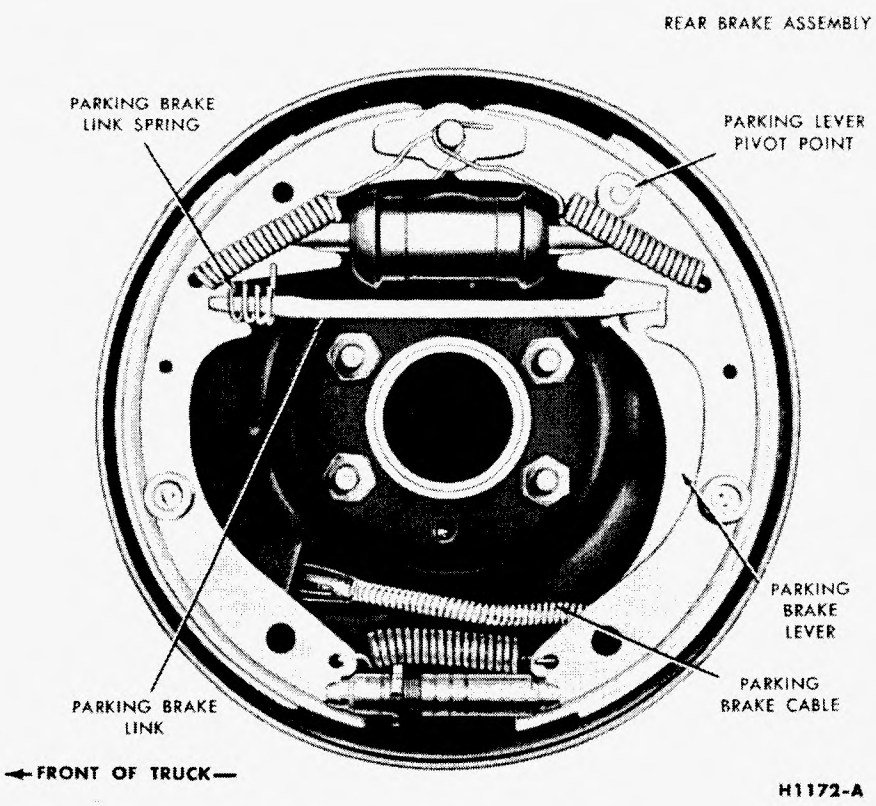

FIG. 47—Truck Parking Brake Assembly

end of the cable into the equalizer and tighten the lock nut on the equalizer slightly.

3. Install the rear brake drum, wheel, and hub cap, then adjust the rear brake shoes.

4. Tighten the lock nut on the equalizer rod until the slack is taken out of the cables.

5. Rotate both rear wheels to make sure that the parking brakes are not dragging.

EQUALIZER TO REAR WHEEL CABLE REPLACEMENT (FAIRLANE, FALCON, AND ECONOLINE)

REMOVAL

1. Remove the lock nut from the equalizer rod, then slide the equalizer and cable assembly from the rod (Fig. 40 or 41).

2. Remove the U-clips and disengage the cable rear housings from the brackets on the underbody (Fig. 48).

3. Remove the two rear wheels and brake drums.

4. At each rear spring, on the Fairlane, disconnect the small coil spring that retains the parking brake cable housing to the rear spring.

5. At each rear brake, disconnect the parking brake cable from the parking brake lever.

On the Fairlane and Falcon, disengage the cable housing retaining grommet from the carrier plate, and withdraw the cable and housing from the inboard side of the carrier plate.

On the Econoline, compress the prongs on the cable retainer so that they can pass through the hole in the carrier plate. Draw the cable, housing, and retainer out of the hole.

INSTALLATION

1. At each rear brake, insert the rear end of the cable and housing through the hole in the carrier plate from the inboard side. **Be sure that the cable assembly runs over the top of the suspension rear spring.**

2. Connect the cable to the parking brake lever.

On the Fairlane and Falcon, engage the housing retaining grommet to the carrier plate (Fig. 48).

On the Econoline, pull the excess slack from the cable and insert the cable housing and retainer into the carrier plate access hole so that the retainer prongs expand.

3. At each suspension rear spring, on the Fairlane, secure the parking brake cable housing to the rear spring with the small, coil-type retaining spring.

4. Engage the forward ends of the cable housings to the brackets on the underbody, and secure with the U-clips (Fig. 48).

5. Assemble the equalizer rod to the equalizer lever. Slide the equalizer and cable assembly on the rod, and secure with the lock-nut (Fig. 40 or 41).

6. Install the rear brake drums and adjust the brake shoes. Install the wheels and hub caps. Adjust the parking brake cable.

BAND TYPE PARKING BRAKE (F-350, P-350 AND P-400 TRUCKS)

The band type parking brake is used only on those P-350 trucks that are equipped with a 3-speed H.D. transmission and a 7200 lb rear axle.

The band type parking brake consists of a brake drum bolted to the transmission main shaft companion flange, and an external contracting type band mounted on the rear of the transmission (Fig. 43).

BAND AND DRUM REPLACEMENT

Removal

1. Shift the transmission into low gear and disconnect the drive shaft companion flange from the transmission output shaft flange by removing the four nuts (Fig. 43).

2. Apply the parking brake. Remove the transmission output flange retaining nut, then release the parking brake.

3. Remove the cotter pin and clevis pin, and disconnect the adjusting rod from the cam.

4. Remove the cotter pin and clevis pin, and remove the cam link from the cam.

5. Remove the lock wire and the anchor adjusting screw.

6. Remove the brake band adjusting bolts and nuts.

7. Remove the brake bracket retaining cap screws.

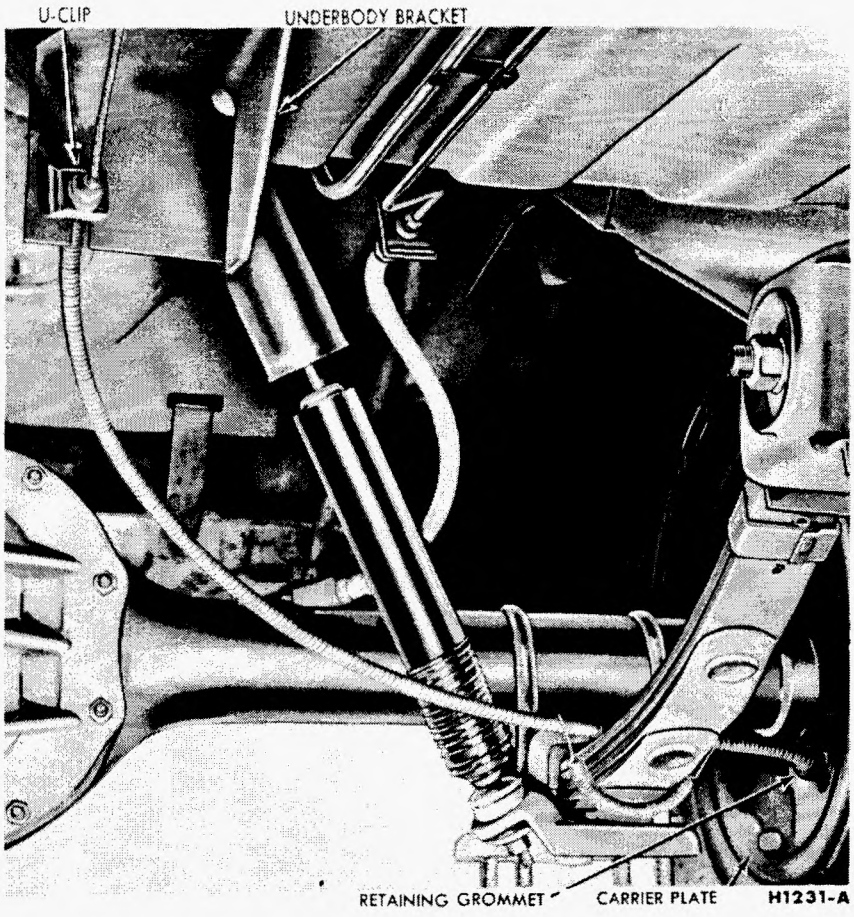

FIG. 48—Fairlane Cable Rear Housing Connections

8. Lift the brake band and lining assembly off the drum.

9. Inspect the brake lining, and replace it if the distance between the brake lining surface and the top of the rivet is less than 1/32-inch.

When relining a parking brake band, follow the procedure described in "Brake Shoe Relining."

10. Inspect the drum braking surface. If the drum is rough or scored, it must be replaced. Remove the drum and output shaft flange as an assembly.

Installation

1. Transfer the output shaft flange to the replacement drum.

2. Position the parking brake drum and output shaft flange assembly to the transmission output shaft, and install the retaining nut.

3. Position the parking brake band assembly over the drum, and install the bracket retaining screws.

4. Install the brake band adjusting bolts, nuts, and springs.

5. Connect the cam link to the lower end of the cam with the clevis and cotter pin.

6. Connect the adjusting rod to the upper end of the cam with the clevis and cotter pin.

7. Adjust the parking brake (See "Parking Brake Adjustment—Trucks"), and install a lock wire in the anchor adjusting screw.

8. Apply the parking brake, torque the transmission output shaft flange nut to specifications, then release the parking brake.

9. With the transmission in low gear, connect the drive shaft at the flange and torque the four retaining nuts to specifications.

3 POWER BRAKE REPAIR—CARS

POWER UNIT REPLACEMENT—FAIRLANE AND GALAXIE

REMOVAL

1. Working inside the car below the instrument panel, disconnect the booster valve operating rod (link) from the brake pedal assembly. To do this on the Fairlane, remove the nut and eccentric shoulder bolt (Fig. 49). On the Galaxie, remove the horseshoe-type retaining clip, then slide the link off the pin that is integral with the pedal.

2. Open the hood, and disconnect the wires from the stoplight switch at the brake master cylinder (Fig. 49). Remove the wires from the clip on the booster.

3. Disconnect the brake line at the master cylinder outlet fitting.

4. Disconnect the manifold vacuum hose from the booster unit.

5. Remove the 4 bracket-to dash panel retaining bolts (Fairlane) or nuts (Galaxie).

6. Remove the booster and bracket assembly from the dash panel, sliding the link out from the engine side of the dash panel.

INSTALLATION

1. Mount the booster and bracket assembly to the dash panel by sliding the valve operating rod (link) in through the

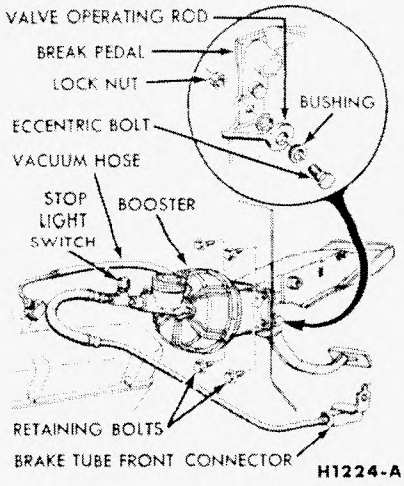

FIG. 49—Fairlane Brake Booster Installation—Typical of Galaxie

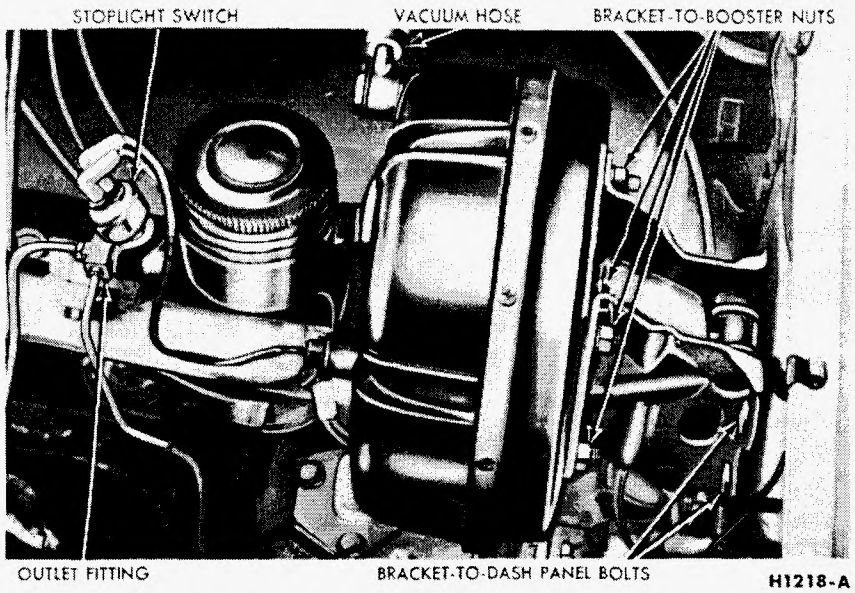

FIG. 50—Brake Booster Installation—Thunderbird

hole in the dash panel, and installing the retaining bolts (Fairlane) or nuts (Galaxie) (Fig. 49).

2. Connect the manifold vacuum hose to the booster.

3. Connect the brake line to the master cylinder outlet fitting, and connect the wires to the stoplight switch on the master cylinder.

4. Working inside the car below the instrument panel, connect the link to the brake pedal. On the Fairlane, install the bushings, eccentric shoulder bolt, and nut, then adjust the brake pedal height.

On the Galaxie, slide the link onto the pin that is integral with the pedal. Secure the link to the pin with a horseshoe-type retaining clip.

5. Bleed the brake system.

POWER UNIT REPLACEMENT—THUNDERBIRD

REMOVAL

1. Open the hood. Disconnect the wires from the stoplight switch at the brake master cylinder (Fig. 50). Disconnect the brake lines from the master cylinder outlet fitting. Disconnect the manifold vacuum hose from the booster unit. Disconnect the transmission vacuum throttle valve from the booster.

2. Working inside the car below the instrument panel, disconnect the booster push rod link from the brake pedal assembly. To do this, remove the horseshoe-type retaining clip, and slide the push rod link off the pin that is integral with the pedal.

3. Remove the four bracket-to-dash panel retaining nuts and washers.

4. Remove the booster and bracket assembly from the dash panel, sliding the push rod link out from the engine side of the dash panel.

INSTALLATION

1. Mount the booster and bracket assembly to the dash panel by sliding the bracket mounting studs and the push rod link in through the holes in the dash panel (Fig. 50).

2. Working inside the car below the instrument panel, install the mounting bracket-to-dash panel retaining nuts and washers. Connect the booster push rod link to the brake pedal assembly. To do this, slide the push rod link onto the pin that is integral with the pedal. Secure the link to the pin with a horseshoe-type retaining clip.

3. Connect the manifold vacuum hose to the booster. Connect the transmission vacuum throttle valve hose.

4. Connect the brake lines to the master cylinder outlet fitting, and connect the wires to the stoplight switch on the brake master cylinder. Bleed the hydraulic system.

POWER UNIT OVERHAUL

DISASSEMBLY

Removal of External Parts

1. Remove the two attaching nuts and lock washers, and separate the master cylinder from the booster body.

2. Remove the filter cover and hub and the air filter from the booster body (Fig. 51).

3. Remove the mounting bolt, vacuum manifold, two gaskets, and the vacuum check valve from the booster body (Fig. 51).

4. On the Thunderbird, disconnect the valve operating rod from the lever assembly by removing the retainer clip, washers, and connecting pin (Fig. 51). Disconnect the lever assembly from the end plate brackets by removing the retainer clip, washers, and pivot pin.

5. Remove the retaining nuts, and disassemble the brackets from the end plate. Remove the rubber boot from the valve operating rod.

Separation of Major Components

1. Remove the large C-ring that retains the rear seal adapter assembly to the booster end plate (Fig. 51).

2. Remove the booster body-to-end plate retaining screws, tap the outside of the end plate with a

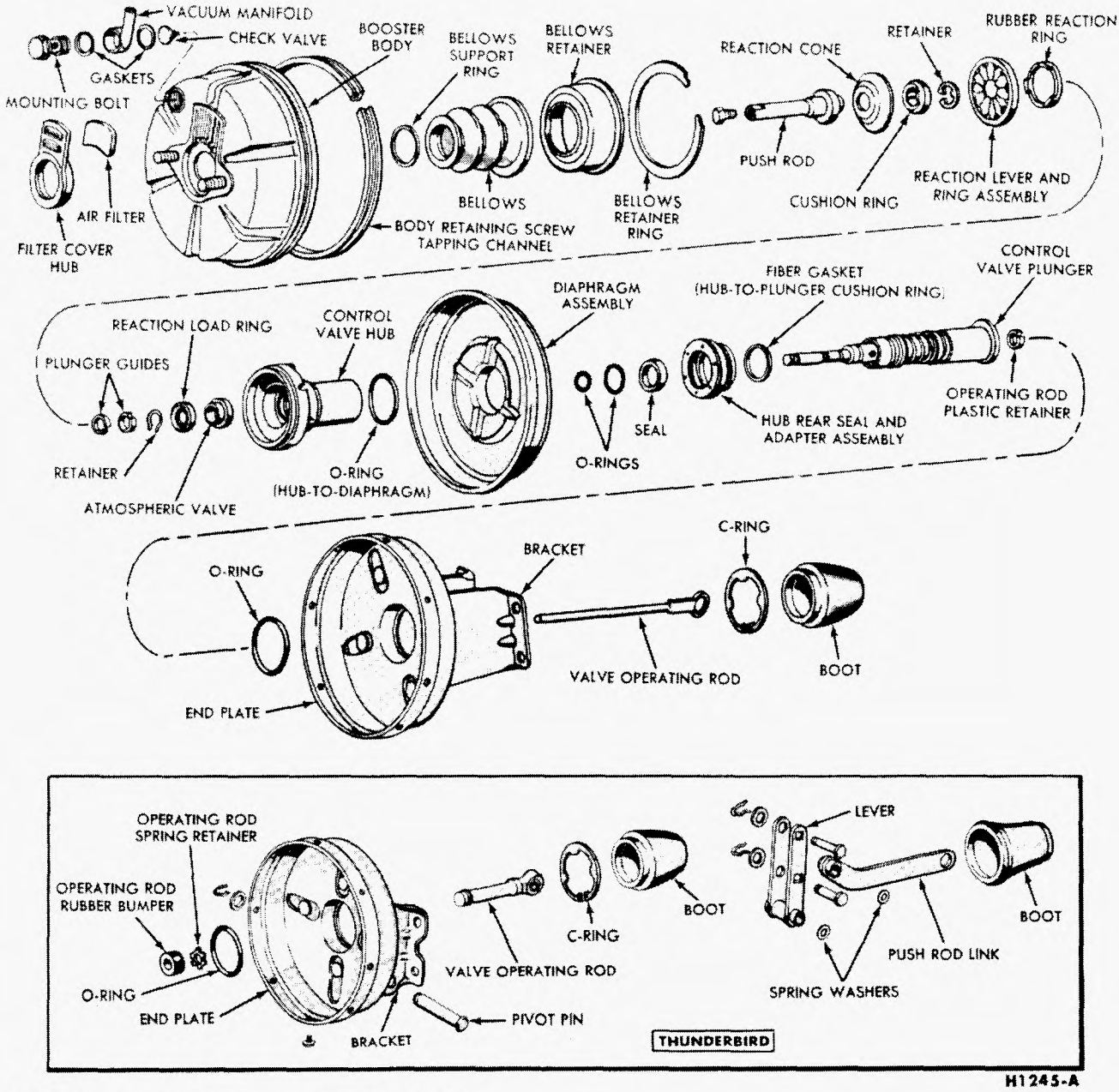

FIG. 51—Brake Booster—Exploded View

fiber hammer, and separate the end plate from the booster body, leaving the rear seal and adapter assembly on the control valve hub.

3. Push the bellows assembly into the vacuum chamber (Fig. 52), and separate the bellows, control valve and diaphragm assembly from the booster body.

4. Remove the outer O-ring from the control valve hub (Fig. 51).

Disassembly of Bellows, Push Rod and Valve Assembly from Diaphragm

1. Remove the large bellows retaining ring, bellows, bellows retainer, and support ring from the diaphragm and valve assembly (Fig. 53). Remove the retainer and support ring from the bellows (Fig. 51).

2. Remove the push rod assembly, the reaction lever and ring assembly, and the rubber reaction ring from the control valve hub (Fig. 54). Remove the retainer, the cushion ring, and the reaction cone from the push rod assembly, and disassemble the reaction levers from the ring (Figs. 51 and 54).

3. Remove the two plastic plunger guides from the control valve plunger, then remove the retainer that holds the reaction load ring and atmospheric valve to the control valve hub (Fig. 54).

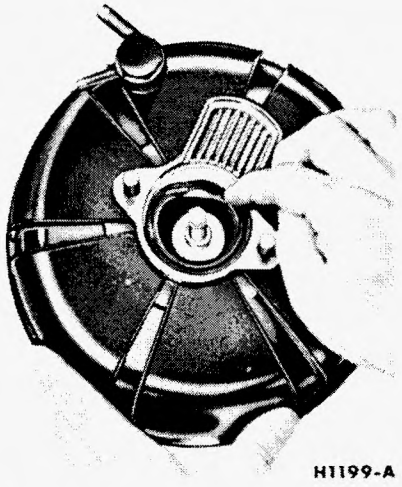

FIG. 52—Separation of Bellows, Control Valve, and Diaphragm Assembly from Booster Body

Slide the reaction load ring and the atmospheric valve from the control valve hub (Figs. 54 and 55). Separate the control valve hub and the control valve plunger assembly from the diaphragm by sliding the valve plunger and rear seal adapter from the rear of the valve hub (Fig. 55). Remove the hub outer O-ring from the front side of the diaphragm.

Disassembly of Control Valve Plunger

1. Remove the hub rear seal adapter from the valve plunger assembly, and remove the seal from the adapter.

2. Remove the O-rings, the seal, and the fiber gaskets from the valve plunger (Fig. 56).

3. Do not remove the valve operating rod from the control valve plunger unless the plunger assembly, or the rod, is to be replaced. To remove the rod on a Thunderbird, hold the plunger firmly, and pull out the rod with pliers.

On a Fairlane or Galaxie, hold the rod firmly and force the plunger off the rod, breaking the plastic retainer. Remove all the broken pieces of the plastic retainer from the groove in the plunger, if the plunger is to be used again with a replacement rod.

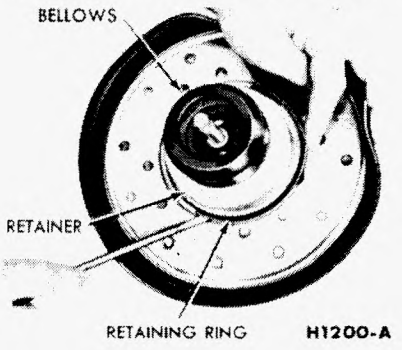

FIG. 53—Bellows Removal or Installation

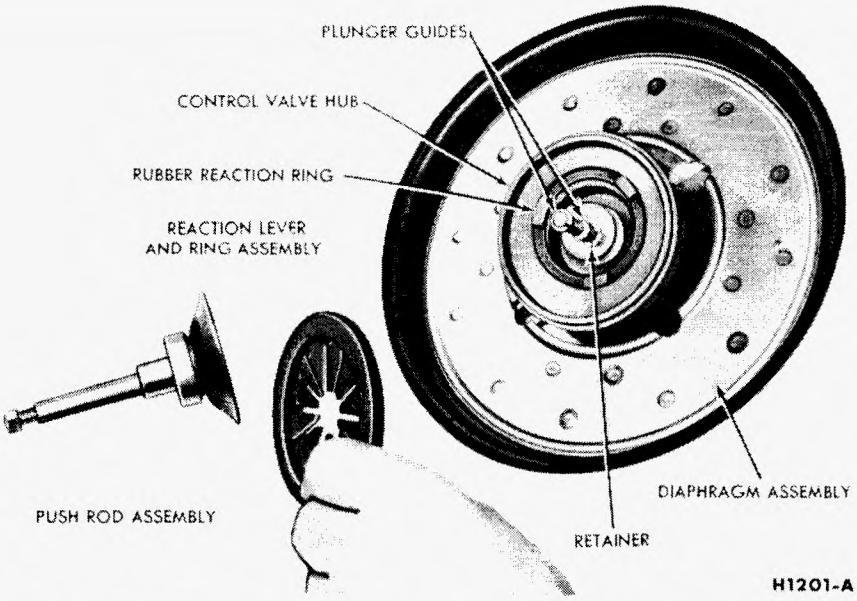

FIG. 54—Assembly of Reaction Components and Push Rod to Valve Hub

CLEANING AND INSPECTION

After disassembly, immerse all metal parts in a suitable solvent. Use only alcohol on rubber parts, or parts containing rubber. After the parts have been thoroughly cleaned and rinsed in cleaning solvent, the metal parts which come in contact with hydraulic brake fluid should be rewashed in clean alcohol before assembly.

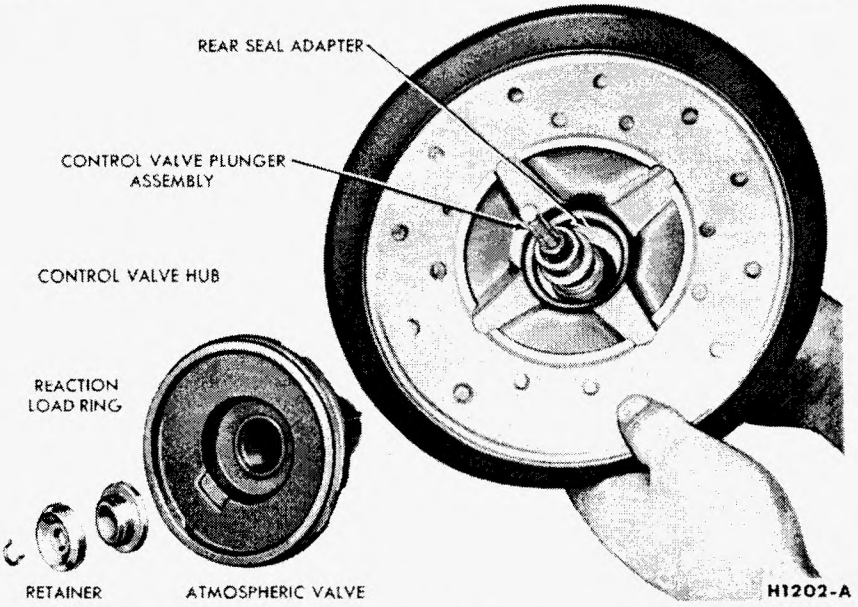

FIG. 55—Assembly of Control Valve Components to Diaphragm

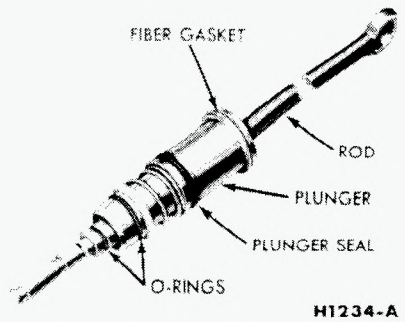

FIG. 56—Valve Operating Rod and Plunger Assembly

Use an air hose to blow dirt and cleaning fluid from the recesses and internal passages. When overhauling a power booster, use all parts furnished in the repair kit. **Discard all old rubber parts.**

Inspect all other parts for damage or excessive wear. Replace damaged or excessively worn parts. If the inside of the booster body is rusted or corroded, polish it with steel wool or fine emery cloth. Replace the body shell when scored. Inspect the master cylinder bore for signs of scoring, rust, pitting, or etching. Any of these conditions will require replacement of the cylinder.

ASSEMBLY

Control Valve Plunger Assembly

1. If the valve operating rod was removed from the old plunger assembly on a Thunderbird, install a new rubber bumper and spring retainer on the rod before assembling to the replacement plunger assembly (Fig. 51). Push the operating rod firmly until it bottoms in the plunger.

If the valve operating rod was removed from the plunger on a Fairlane or Galaxie, assemble a new plastic retainer to the end of the rod (Fig. 51). Insert the rod into the plunger so that the retainer engages the groove in the plunger.

2. Install the fiber gasket, the plunger seal, and the O-rings to the valve plunger assembly (Fig. 56).

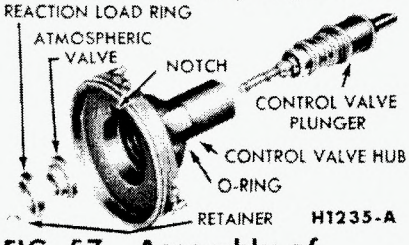

FIG. 57—Assembly of Control Valve Components to Valve Hub

Assembly of Valve Assembly, Push Rod, and Bellows to Diaphragm

1. Insert the control valve plunger into the control valve hub from the rear of the hub (Fig. 57).

2. Assemble first the atmospheric valve and then the reaction load ring to the valve plunger and hub. Compress the valve spring and install the load ring retainer in the groove of the plunger (Fig. 57). The retainer secures all the control valve components to the valve hub.

3. Install the O-ring in the groove on the outer circumference of the valve hub. Assemble the valve plunger and hub assembly to the diaphragm so that the operating rod and the small-diameter end of the hub enter the front side of the diaphragm and protrude from the rear side.

4. Install the two plastic plunger guides in their grooves on the valve plunger assembly (Fig. 54).

5. Install the rubber reaction ring in the valve hub so that the ring locating knob indexes in the notch in the hub (Fig. 57), with the ring tips toward the front (Fig. 54).

6. Assemble the reaction lever and ring assembly, then install the assembly in the valve hub (Fig. 54).

7. Assemble the reaction cone and cushion ring to the push rod, and secure to the rod with the retainer (Fig. 51). Install the push rod assembly to the valve hub so that the valve plunger indexes in the push rod (Fig. 54).

8. Assemble the bellows, retainer, and support ring (Fig. 51). The support ring is positioned on the middle fold of the bellows.

9. Position the bellows assembly and secure it to the diaphragm by installing the retaining ring (Fig. 53). Make sure that the retaining ring is fully seated.

Assembly of Major Components

1. With a screwdriver, slightly move the booster body retaining screw tapping channel in order to provide a new surface for the self-tapping attaching screws (Fig. 51).

2. Install the diaphragm, the control valve components, and the bellows as an assembly to the booster body. **Make sure that the lip of the diaphragm is evenly positioned on the retaining radius of the booster body.**

3. Install the O-ring in the front side of the end plate.

4. Install the valve hub rear seal in the adapter assembly, with the sealing lip toward the rear, then install the adapter assembly into the front side of the end plate, with

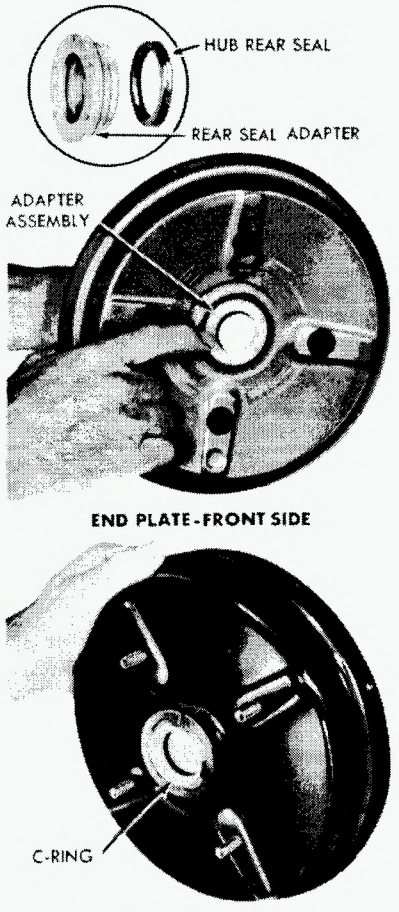

FIG. 58—Installation of Hub Rear Seal and Adapter Assembly

the small-diameter end of the adapter protruding from the rear side of the end plate (Fig. 58).

5. Install the large C-ring to the rear seal adapter at the rear side of the end plate (Fig. 58).

6. Position the end plate to the booster body. Align the scribe lines, compress the two assemblies together with a clamp, then install the attaching screws.

7. Pull the front lip of the bellows through the booster body and position it around the outer groove of the booster body (Fig. 52).

Push Rod Adjustment

The push rod is provided with an adjustment screw to maintain the correct relationship between the booster control valve plunger and the master cylinder piston. Failure to maintain this relationship will prevent the master cylinder piston from completely releasing hydraulic pressure, and can cause the brakes to drag.

To check the adjustment of the screw, fabricate a gauge of the dimensions shown in Fig. 59, then place the gauge against the master cylinder mounting surface of the booster body, as shown in Fig. 60. The push rod screw should be adjusted so that the end of the screw just touches the inner edge of the slot in the gauge.

External Parts Installation

1. Install the rubber boot to the valve operating rod (Fig. 51).

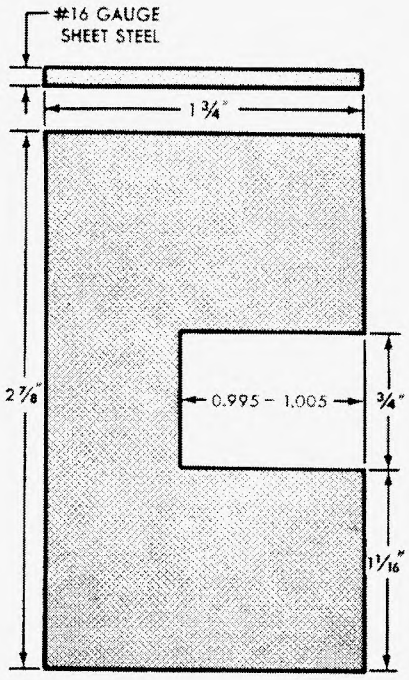

FIG. 59—Push Rod Gauge Dimensions

2. Position the mounting brackets to the end plate, and install the retaining nuts.

3. On a Thunderbird, connect the lever assembly to the lower end of the mounting brackets with the pivot pin. Install the spring washer and hairpin clip. Connect the valve operating rod to the upper end of the lever with the connecting pin, spring washer, and clip.

4. Install the vacuum check valve, position the vacuum manifold and two gaskets, and secure the entire assembly to the booster body with mounting bolt (Fig. 51). Torque the mounting bolt to specifications.

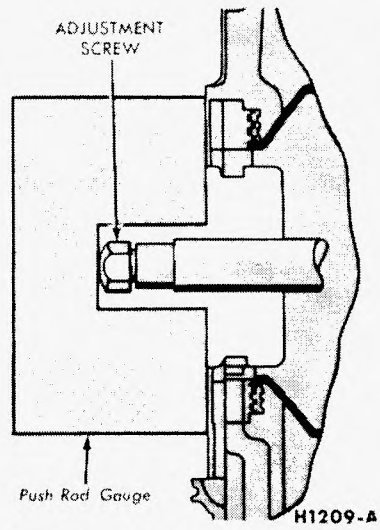

FIG. 60—Push Rod Adjustments

5. Install the following parts to the booster body in the order indicated: first the air filter, then the filter cover and hub; and finally, the brake master cylinder. Torque the master cylinder mounting nuts to specifications.

If the booster is being installed on a car previously equipped with only the standard brake system, be sure to discard the original master cylinder and install the master cylinder supplied with the booster kit.

4 POWER BRAKE REPAIR—TRUCKS

A 6 3/4-inch piston-type booster is available as optional equipment on F-350, P-350, and P-400 trucks.

BOOSTER REPLACEMENT

REMOVAL

1. Depress the brake pedal several times to remove all vacuum from the system.

2. Loosen the booster air inlet tube clamp, and remove the tube. Disconnect the hydraulic lines and the vacuum hose at the booster.

3. Remove the booster mounting bolts, then remove the booster. **Do not remove the breather or the vacuum check valve unless operating conditions indicate repairs are necessary.**

INSTALLATION

1. Position the booster on the mounting bracket, and install the mounting bolts, using new lock washers.

2. Connect the hydraulic lines to the booster. Tighten the connections securely.

3. Connect the air intake hose to the control valve air inlet tube.

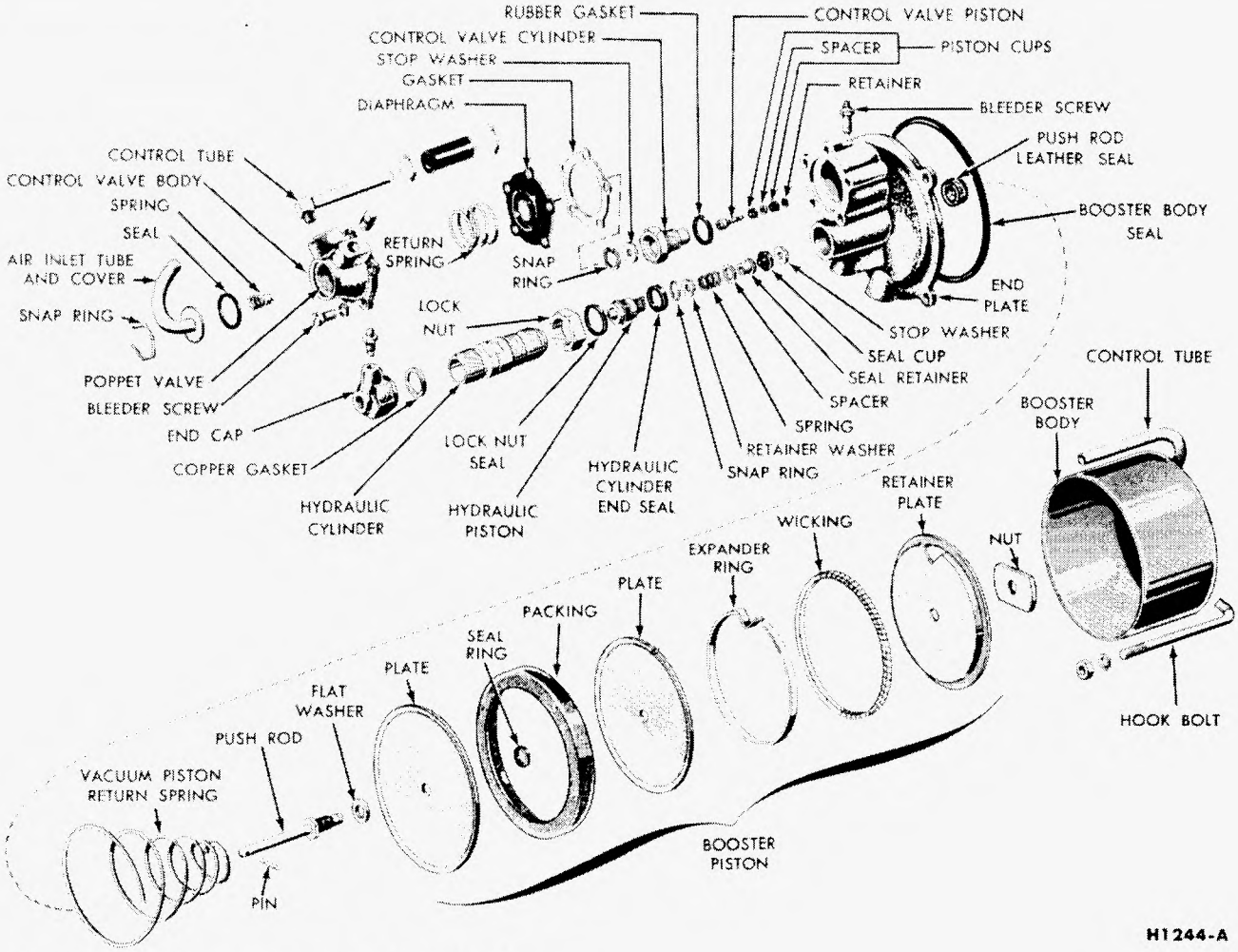

FIG. 61—Truck Booster—Exploded View

Tighten the hose clamp securely. If necessary, clean the air inlet element.

4. Bleed the brake system.

5. Connect the vacuum tube-to-booster hose to the booster. Tighten the hose clamps securely.

6. Check the system for leaks and for proper operation.

BOOSTER OVERHAUL

DISASSEMBLY

1. Loosen the control tube hose clamps and slide the hose off the end of the tube (Fig. 61).

2. Remove the air inlet tube snap ring and remove the air inlet tube, seal, and spring from the control valve body.

3. Remove the 5 control valve body mounting screws and remove the body, return spring, diaphragm, and gasket from the end plate. The poppet valve cannot be removed from the valve body.

4. Mount the end cap in a vise, loosen the hydraulic cylinder lock nut, and unscrew the end plate and booster body assembly from the hydraulic cylinder (Fig. 61).

5. Unscrew the hydraulic cylinder from the end cap, then remove the lock nut and seal from the cylinder. Remove the bleeder screw and copper gasket from the end cap then remove the end cap from the vise.

6. Scribe a line across the booster body and end plate so that these parts can be reassembled in their original position. Remove the 4 hook bolts, and slide the booster body from the vacuum piston assembly.

7. Compress the vacuum piston return spring by pressing down on the end plate and using hook-type clamps similar to those in Fig. 62. Hold the spring compressed.

8. Remove the hydraulic piston from the push rod by sliding the retainer spring (on the hydraulic piston) back, and removing the retainer pin.

9. Remove the hook clamps and separate the vacuum piston and push rod assembly, and the return spring from the end plate.

10. Clamp one of the bolt flanges of the end plate in a vise. Unscrew the control valve cylinder from the end plate, then remove the rubber gasket from the cylinder. Remove the snap ring and stop washer, then press the control valve piston assembly

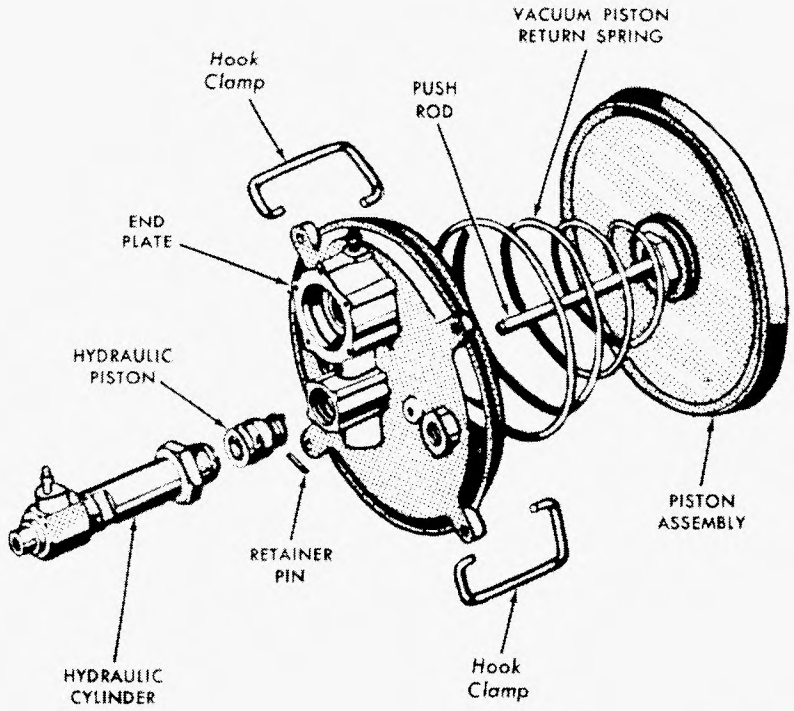

FIG. 62—Vacuum Piston, End Plate, and Hydraulic Cylinder

from the cylinder (Fig. 61). The piston should come out of the front end of the cylinder to avoid damage to the cups.

11. Remove the small retainer, then remove the piston cups and spacer from the control valve piston.

12. Remove the hydraulic cylinder end seal from the end plate (Fig. 61). Remove the snap ring, then remove the push rod seal cup parts (retainer washer, spring spacer, seal retainer, seal cup and stop washer) from the end plate.

13. Remove the end plate from the vise and place it on two wooden blocks with the hydraulic cylinder side up. Drive the push rod leather seal assembly out of the end plate, using a flat end rod or drift.

14. Clamp the vacuum piston and push rod assembly in a vise at the hexagonal nut. Remove the vacuum piston retaining nut and disassemble the vacuum piston from the push rod (Fig. 61). Remove the flat washer.

CLEANING AND INSPECTION

Wash all the metal parts in solvent. Wipe thoroughly with clean rags, and dry all air passages with compressed air.

Inspect all parts for wear or damage. Replace all worn or damaged parts.

If the bore of the booster body is corroded or rusted, polish it with fine emery cloth or steel wool. If the booster body is badly pitted or scored, it should be replaced.

Inspect the poppet valve and seats. If the valve faces are damaged or if the seats are severely pitted, replace the valve body and poppet valve assembly. All rubber parts should be replaced with new parts. **Do not allow the hydraulic system parts to come in contact with mineral oil. Do not handle hydraulic cups or seals with greasy hands.**

ASSEMBLY

1. Install the bleeder screw and a new copper gasket in the end cap, and place the end cap in a vise. Thread the hydraulic cylinder into the end cap with the milled flats on the cylinder next to the end cap (Fig. 61). Place a wrench on the milled flats and tighten the cylinder securely.

2. Thread the lock nut on the hydraulic cylinder to the limit of the threads. Position a new lock nut seal between the two sections of thread on the hydraulic cylinder.

3. Place the end plate on two wooden blocks with the hydraulic cylinder side of the end plate up. Press the push rod leather seal into the end plate with the lip of the leather seal toward the hydraulic cylinder side of the end plate.

4. Dip the control valve piston seals in heavy duty brake fluid, assemble the seals on the piston with the spacer between the two seals, and secure with the C-type retainer (Fig. 61). The lip of each piston should point toward the retainer end of the piston. Insert the piston assembly into the control valve cylinder **from the rear side** of the cylinder. Install the stop washer at the front end of the cylinder against the piston, and secure in place with the snap ring.

5. Clamp the end plate in a vise at one of the bolt flanges. Place a new rubber gasket over the threaded end of the control valve cylinder, thread the cylinder into the end plate, and tighten securely with a 1 1/8-inch socket.

6. To assemble the push rod seal cup parts (Fig. 61), insert the push rod through the leather seal at the rear side of the end plate. The rod will hold the parts in alignment as they are installed. Install the stop washer with the chamfered side toward the end plate, the seal cup with the lip of the cup away from the stop washer, the seal retainer with the flanged end next to the cup, and the spacer with the chamfered end next to the cup. Install the spring over the seal retainer and against the flat side of the spacer. Place the retainer washer against the spring, and compress the spring until the washer is to the inner side of the snap ring groove. Install the snap ring in the groove, then remove the push rod. Install a new cylinder end seal.

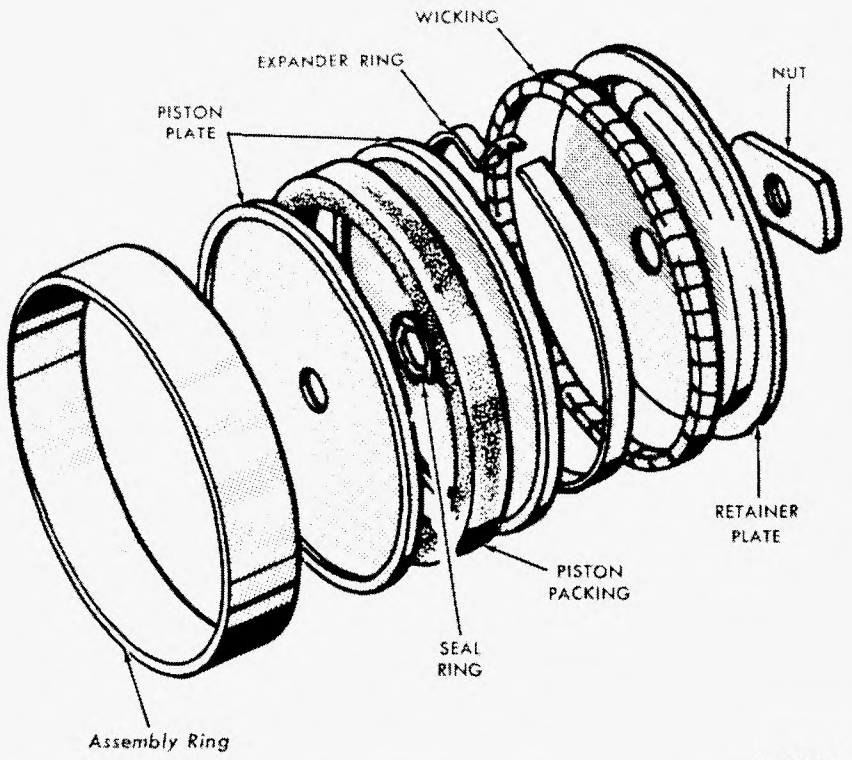

FIG. 63—Disassembled Vacuum Piston

7. Fabricate a vacuum piston assembly ring by cutting a 1-inch section from an old cylinder shell of correct size. Place the assembly ring (Fig. 63) on the bench and assemble the vacuum piston parts in the assembly ring, installing the larger diameter piston plate with the chamfered side of the hole up, the leather piston packing with the lip of the packing up, the seal ring, and the small diameter piston plate with the chamfered side of the hole down.

8. Cut the wicking to the required length, and assemble it against the inner face of the piston packing lip.

9. Position the expander ring inside the wicking, with the gripper points up and the notch at the loop end of the expander ring under the clip near the opposite end of the expander ring.

10. Assemble the retainer plate with the cut-out portion over the loop of the expander ring.

11. Hold the push rod in a vertical position, and assemble the flat washer over the threaded end. With the assembly ring still in position over the booster piston, guide the piston assembly over the push rod. Secure the booster piston to the push rod with the large retaining nut.

12. Place the vacuum piston return spring over the push rod with the small end of the spring next to the vacuum piston.

13. Carefully guide the push rod through the leather seal of the end plate, compress the spring, and install the hook clamps to hold the spring compressed (Fig. 62).

14. Position the hydraulic piston on the push rod and secure with the retainer pin. Slide the retainer spring over the hole in the piston to hold the retainer pin in place.

15. Carefully guide the hydraulic cylinder over the lip of the piston cup, and thread the hydraulic cylinder into the end plate, finger-tight. Remove the hook clamps and remove the unit from the vise.

16. Hold the booster body in a vertical position, and mount it in a vise at the control tube.

17. Insert a rubber stopper into the control tube (Fig. 64).

18. With the top face of the vacuum piston flush with the top edge of the assembly ring, line up the assembly ring with the booster body, and guide the vacuum piston into the booster body.

19. As soon as the piston has entered the booster body, lift the assembly ring to permit inspection of the piston packing. If the leather packing has started to enter the booster body without any part of the packing folded back, remove the rubber stopper, press the vacuum piston into the booster body approximately 2 inches, and replace the rubber stopper. If inspection reveals that any part of the piston packing has been folded back, repeat the above operation.

20. With the rubber stopper still in the control line tube, slide the assembly ring over the end plate, as shown in Fig. 64, and remove the rubber stopper from the control line.

21. Assemble a new rubber gasket in the groove of the end plate, and align the end plate with the booster body at the scribe marks. Install the hook bolts and tighten uniformly (Fig. 61).

22. Drop the two hose clamps over the integral control tube on the booster body and assemble the hose on the control tube. If the control valve body is being replaced, transfer the removable control tube from the old to the new body.

23. The use of guide pins, threaded into the end plate, will simplify the assembly of the control valve body and components to the end plate, and will reduce the possibility of damaging the diaphragm during assembly. Guide pins may be made by cutting the heads from five 32 x 2-1/2-inch machine screws.

Install the guide pins, position a new gasket and the diaphragm over the pins, then position the return spring in the recess in the diaphragm (Fig. 61).

24. Assemble the control valve body over the pins so that the control tube on the valve body enters the hose on the booster body

tube. Hold the control valve body and parts against the end plate, and remove one guide pin at a time, replacing it with a screw and lock washer. Tighten the screws securely.

25. Secure the hose clamps in position.

26. Install the spring, the seal, and the air inlet tube and cover assembly to the control valve body and secure in place with the snap ring (Fig. 61).

27. Align the bleeder screw in the end cap with the bleeder screw in the end plate by manually turning the hydraulic cylinder in the end plate threads. While holding the hydraulic cylinder in this properly aligned position, securely tighten the cylinder lock nut (Fig. 61).

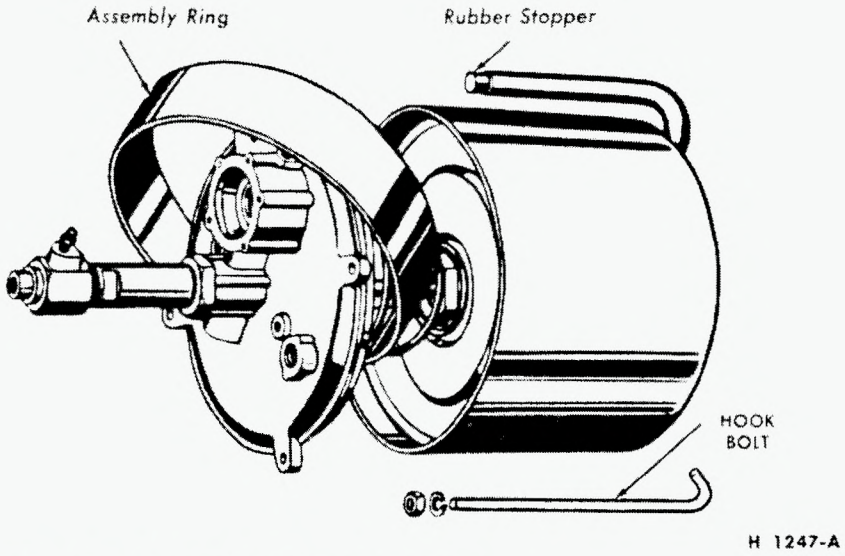

FIG. 64—Assembly Ring Removal

PART 3 SPECIFICATIONS

Special Tools

Tool No.	Tool Name and Purpose
2035-N	Retracting Spring Remover and Installer
T60K-4234	Rear Axle Shaft Puller (Falcon)
4235-A	Rear Axle Shaft Puller (Econoline)
4235-C	Rear Axle Shaft Puller (Fairlane, Galaxie, Thunderbird, and 100-Series Trucks)

Tool No.	Tool Name and Purpose
T50T-100-C	Slide Hammer Push Rod Gauge
1112-144	Snap Torque Wrench for Brake Lines at Wheel Cylinder

Torque Limits

DESCRIPTION	FOOT-POUNDS					
	Falcon	Fairlane	Galaxie	T-Bird	Econoline	Trucks
Master Cylinder Mounting Bolts	12-18	12-18	12-18	12-18	23-29	12-15 (5/16-24) 24-30 (3/8-24)
Master Cylinder Cover				Finger-Tight		
Hand Brake Control Assembly to Instrument Panel Bolt	8-14	—	—	—	11-15	—
Hand Brake Control Assembly to Dash Panel Bolt	8-12	—	—	—	15-19	—
Control Assembly—Parking Brake to Side Cowl	—	15-19	15-19	—	—	—
Brake Pedal Support Bracket to Dash Panel Bolt	12-18	—	—	—	12-18	—
Brake Pedal Support Bracket to Instrument Panel Nut	10-15	—	—	—	10-15	—
Brake Pad to Brake Pedal Nut	—	12-16	12-16	—	—	—
Eccentric Bolt to Brake Pedal	20-27	—	—	—	12-26	30-35

Torque Limits (Continued)

DESCRIPTION	FOOT-POUNDS							
	Falcon	Fairlane	Galaxie	T-Bird	Econoline	Trucks		
Brake Tube Fitting Nut	12-18	12-18	12-18	12-18	12-18	12-18		
Brake Cylinder to Brake Carrier Plate Bolt—Front and Rear	8-12	10-20	10-20	10-20	11-19	45-55		
Carrier Plate and Cylinder Assembly Brake Shoe Anchor Pin Nut—Front	—	—	20-30	—	—	—		
Clutch and Brake Pedal Bumper Nut	—	—	—	—	—	15-20		
Master Cylinder Push Rod—P-Series	—	—	—	—	—	15-22		
Parking Brake Drum to Transmission Output Flange and U-Joint Flange Nut						35-45 (3/8-24)	50-70 (7/16-20)	
Front Wheel Assembly to Wheel Hub and Drum Assembly Nut	55-85	85-95	85-95	85-95	55-85	50-70 (1/2-13)	58-72 (1/2-20)	115-140 (5/8-18)
Brake Carrier Plate to Spindle Nut—Front	25-35	25-35	25-35	25-35 (Upper) 75-80 (Lower)	45-60	45-55 1/2-20	40-45 7/16-20	
Anchor Pin to Spindle Bolt—Front	—	—	80-100	—	—	—		
Drum to Axle Shaft Assembly Speednut	Hand Push Fit	Hand Push Fit	Hand Push Fit	—	Hand Push Fit	—		
Brake Carrier Plate to Axle Housing Nut	30-35	30-40	30-40*	—	30-35	45-55 1/2-20	40-45 7/16-20	
Rear Wheel Assembly to Axle Shaft to Drum Assembly Nut	55-85	85-95	85-95	85-95	55-85	110-135 (7/8-11)	50-70 (1/2-13)	
Vacuum Manifold to Booster Body Mounting Bolt	—	8-10	8-10	—	—	—		
Master Cylinder to Booster Body Bolt	—	10-13	10-13	12-18	—	—		
Brake Booster to Dash Panel and Pedal Support Bracket Bolt or Nut	—	15-25	15-25	12-18	—	—		

*Models 59, 71 RPO Heavy Duty—55-65 Foot-Pounds

Brake Dimensions

DESCRIPTION	CARS								TRUCKS					
	Falcon		Fairlane		Galaxie		Thunderbird		F100-P100		F250		350-400	
	Front	Rear	Front	Rear	Front	Rear	Front	Rear	Front	Rear	Front	Rear	Front	Rear
Drum Inside Diameter (Inches)	9.000	9.000	10.000	10.000	11.030	11.030	11.030	11.030	11.000	11.000	12.125	12.125	12.125	13.000
Drum Maximum Boring Limit (Inches)	9.060	9.060	10.060	10.060	11.060	11.060	11.060	11.060	11.060	11.060	12.185	12.185	12.185	13.060
Lining Width (Inches) (Primary)	2.25	1.50	2.25	1.75	2.50	2.50	3.00	3.00	2.000	1.750	2.000	2.000	2.000	2.500
(Secondary)	2.25	1.50	2.25	1.75	2.50	2.50	3.00	3.00	2.000	1.750	2.000	2.000	2.000	2.500
Lining Length (Inches) (Primary)	7.68	7.68	9.30	9.30	9.34	9.34	9.39	9.39	10.65	10.65	13.09	13.09	13.09	12.71
(Secondary)	9.81	9.81	10.45	10.45	12.12	12.12	12.21	12.21	11.91	11.91	13.09	13.09	13.09	13.95
Wheel Cylinder Bore Diameter	1.0625	0.8125	1.125 (baffled)	.9062	1.0937	.9375	1.0937	.9375	1.0625	.8750	1.125	1.125	1.125	1.250
Master Cylinder Bore Diameter	1.000		1.000		1.000		.875		1.000		1.250		1.250	

Brake Checks and Adjustments

DESCRIPTION	CARS				TRUCKS		
	Falcon Econoline	Fairlane	Galaxie	Thunderbird	F100-P100	F250	350-400
Brake Pedal Free Play (Inch)	1/4-5/16	No Adjustment	No Adjustment	No Adjustment	3/16-3/8	3/16-3/8	3/16-3/8
Brake Lining Clearance (Midway between rivets) (Maximum)	0.005	0.005	0.005	0.005	0.010	0.010	0.010
Lining Wear Limit (From Top of Rivets)	1/32 inch	1/32 inch	1/32 inch	1/32 inch	1/32 inch	1/32 inch	1/32 inch
Drum Out-of-Round, Refinish if total indicator runout exceeds (inch)	.0005	0.007	0.007	0.007	0.007	0.007	0.007
Master Cylinder Bore Honed Diameter	1.003	1.003	1.003	0.878	1.0635	1.253	1.253
Push Rod Adjustment (Power Unit)	—	0.995-1.005	0.995-1.005	0.995-1.005	—	—	—

FORD DIVISION
QUALITY
SERVICE
SERVICE PUBLICATIONS

FORD DIVISION • FORD MOTOR COMPANY



FORM 7794-E VOL. 62 58 L2 LITHO IN U.S.A.