PLAINTIFF'S EXHIBIT
ARO-227

Instructions and Parts List

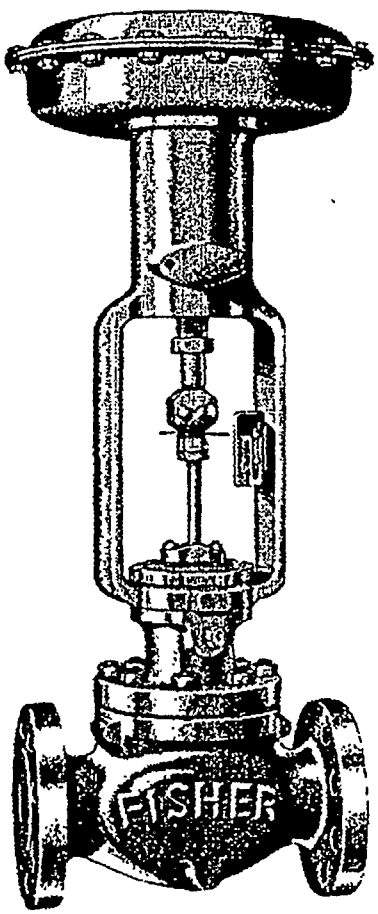

Type 657-ES Control Valve

FISHER® Controls

easy-e™

CONTROL VALVE BODIES

Design "ES" and "ED"

FISHER GOVERNOR COMPANY

PRINTED IN U.S.A. Marshalltown, Iowa 50158 / Woodstock, Ontario / Toluca, Edo de Mexico
25M—2-68
JSS

FORM 2052

715-750

BLUE

AKE-001023

Introduction

Easy-e valve bodies are generally shipped as part of a control valve assembly, and have an automatic diaphragm or piston actuator, or a manual actuator mounted on them. Detailed instructions for Fisher actuators are provided in separate manuals—this manual pertains only to the Design "ES" and "ED" valve bodies.

The Design "ES" and "ED" bodies look the same from the outside; the valve plug—single seated or balanced—determines the proper designation as follows:

Design "ES" (Figure 1) - Single port easy-e body with cage guided, *single seated* valve plug.

Design "ED" (Figure 2) - Single port easy-e body with cage guided, *balanced* valve plug.

Installation

1. Before installing an easy-e body, inspect it for any shipment damage and for any foreign material that may have collected during crating and shipment.
2. Blow out all pipelines to remove pipe scale and chips, welding slag, and other foreign materials.
3. Install the valve so that flow through the body will be in the direction indicated by the flow direction plate. In the Single Seated Design "ES" body, the normal flow direction is up under the valve plug; in the Balanced Design "ED" body, the direction is through the cage openings and down through the seat ring. See Figures 1 and 2.
4. Install the valve, using good piping practices. For flanged bodies, use a suitable gasket between the body and pipeline flanges.
5. Control valves with easy-e body can be installed in any position, but the normal method is with the actuator vertical above the body.
6. If continuous operation is required during maintenance and inspection, install a conventional three valve bypass around the body.
7. Iron easy-e valve bodies are rated at 125 and 250 lb. USAS; steel and alloy steel bodies are rated at 150, 300, and 600 lb. USAS. Do not install the valve in a system where the working pressures exceed those specified in these standards.

Valve Trim Conversion

Since the valve body casting is the same for both the Design "ES" and "ED" bodies, it is possible to convert from one style to the other merely by changing the valve plug, stem, and cage. Note, however, that the Quick Opening cage used in the Design "ED" body is interchangeable with the cage used in the "ES" body. When converting from the Design "ES" to "ED" or vice-versa, it will be necessary to turn the body around in the pipeline (inlet for outlet), and to reposition the flow direction plate.

Within each series of bodies, the flow characteristic can also be changed by installing a new valve plug and stem in the Design "ES" body, and by installing a new cage in the Design "ED" body.

When making any trim conversion, follow the disassembly and assembly procedures in this instruction manual.

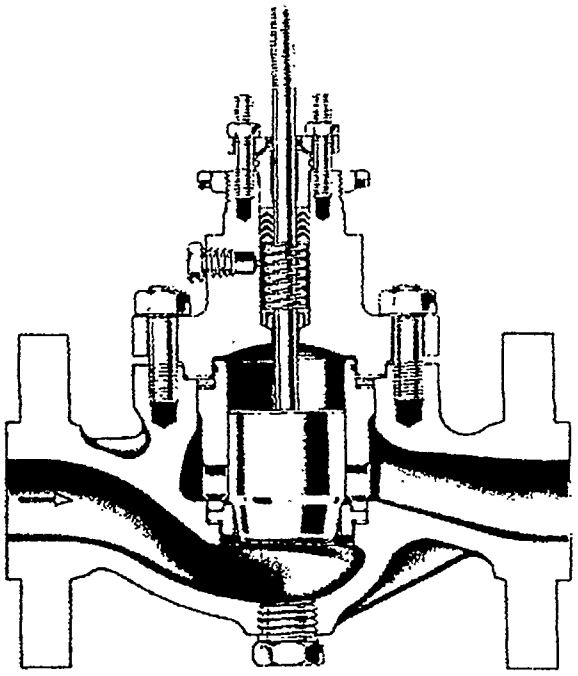

Figure 1. Design "ES" single port body with cage guided, single seated valve plug. Drain plug in bottom of body is optional.

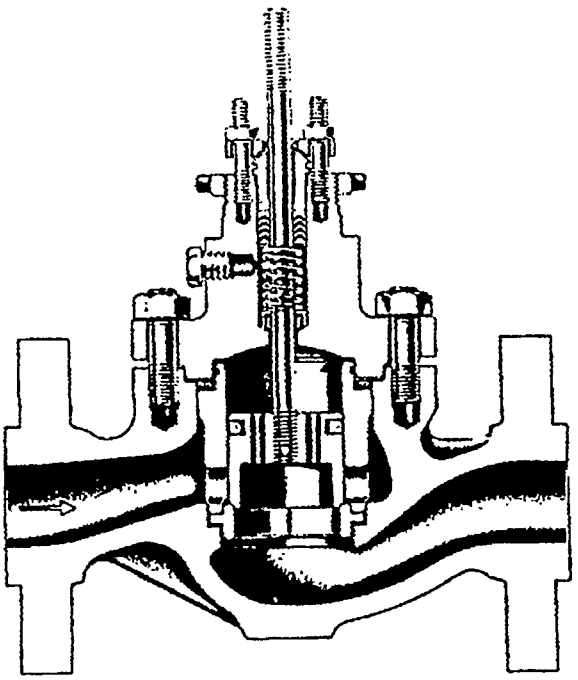

Figure 2. Design "ED" single port body with cage guided, balanced valve plug.

MAINTENANCE

Caution: Before attempting any repairs, isolate the control valve from the system, and make sure that all pressure is released from the easy-e body.

A. Disassembly Instructions

1. After actuator is disconnected and taken off the body, remove nuts or cap screws from the bonnet flange.



2. Lift off the bonnet, along with the valve plug and stem.



3. Separate the valve plug and stem from the bonnet.

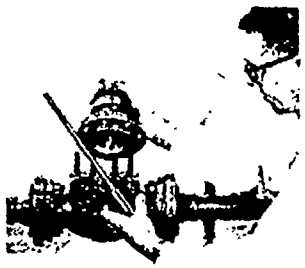

4. Lift out the cage and gaskets. If the cage is stuck, use a screwdriver to pry it loose. A groove is provided near the top of the cage for this purpose.



5. Lift out the seat ring and its gasket.

6. The internal parts of the bonnet can be disassembled, if desired. Follow the instructions given in the section "To Replace TFE V-Ring Packing".



B. Assembly Instructions—Design "ES"

1. Clean all gasketed surfaces.
2. Install new seat ring gasket. Place the seat ring on top of this gasket, making sure that right side (thin side) is up. Check fit of cage and seat ring to determine the right side.
3. Install cage on top of seat ring. Be sure that the seat ring slips into the cage properly. Any rotational orientation of the cage with respect to the body is acceptable.
4. Place cage gasket, spiral wound gasket, and bonnet gasket on the shoulder of the cage. Use all new gaskets. Don't be concerned about the space under the larger bonnet gasket—it won't be there when the bonnet is installed and tightened down.
5. Screw the valve stem into the valve plug until it wedges tight at the top of the plug. Drill hole through valve plug and stem assembly (determine drill size from table on Page 4). Drive in the groove pin to lock the assembly. This step can be omitted if the old valve plug and stem assembly is re-used.

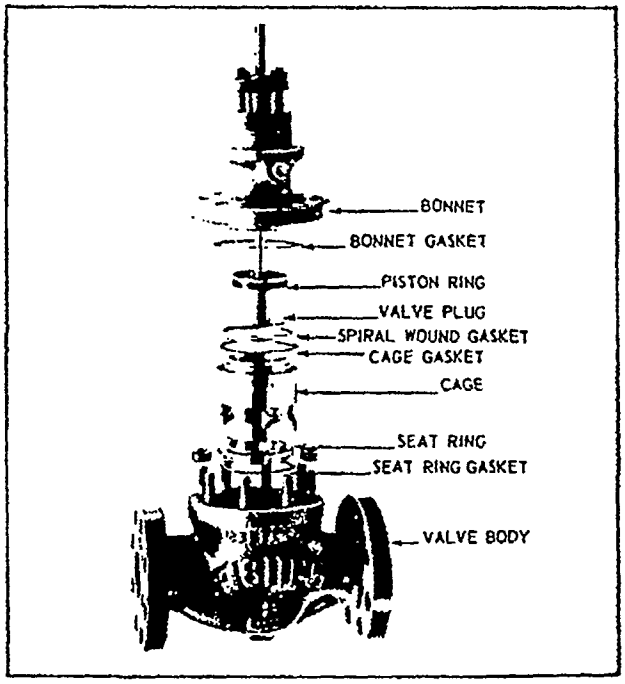

Figure 3. Exploded view of Design "ED" body.

MAINTENANCE

6. Install valve plug and stem assembly in the cage.
7. Mount the bonnet on the body with the lubricator (or pipe plug) facing downstream.
8. Install new packing and associated packing box parts in the sequence shown in Figure 5.
9. Install flow direction plate over two stud bolts (on lettered side of body) on top of bonnet flange with the words "Single Seated" facing up. Point the arrow downstream; flow enters the "ES" body under the valve plug.
10. Tighten bonnet nuts or cap screws until bonnet has compressed the spiral wound gasket and makes a good leak-tight joint.

C. Assembly Instructions—Design "ED"

The instructions outlined in Section B above for the Design "ES" body can also be followed for the Design "ED" body with these exceptions.

1. The piston ring must be installed on the valve plug. If a carbon filled TFE piston ring is used, spread the ring apart slightly at the split, and install it down over the stem into the piston ring groove. If a solid carbon piston ring is used, first place it in a smooth jaw vise and close the jaws slowly to compress the ring diametrically until the ring "snaps". The carbon ring will now be in two pieces and can be placed in the piston ring groove with the fractured ends matched.
2. When installing the valve plug assembly in the cage, hold the piston ring in place until the valve plug slips into the cage.
3. The flow direction plate should be installed over two stud bolts on lettered side of body with the word "Balanced" facing up. Point the arrow downstream; flow enters the "ED" body on top of valve plug.

D. Assembly Instructions—Restricted Trim Bodies

The instructions outlined in Sections B and C can also be followed for easy-e bodies with restricted trim. However, there are a few extra parts such as cage adaptor, seat ring adaptor, and their gaskets, to be included in the assembly. Figures 9 and 10 show easy-e bodies with restricted trim.

HOLE SIZES REQUIRED FOR VALVE PLUG GROOVE PIN

Body Size, In.	Boss Size, In.	Stem Diameter, In.	Hole Size, In.	Drill Size
1	2-1/8	3/8	.096	#41
	2-13/16	1/2	.128	#30
1-1/2	2-1/8	3/8	.096	#41
	2-13/16	1/2	.128	#30
2	2-13/16	1/2	.128	#30
	3-9/16	3/4	.191	#11
2-1/2	2-13/16	1/2	.128	#30
	3-9/16	3/4	.191	#11
3	2-13/16	1/2	.128	#30
	3-9/16	3/4	.191	#11
4	2-13/16	1/2	.128	#30
	3-9/16	3/4	.191	#11
	5	1	.251	1/4"

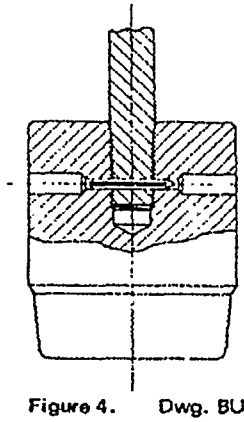

Figure 4. Dwg. BU7363

Figure 4 above shows that the groove pin hole is a smaller one inside a larger diameter hole. The punch used to drive out the pin must, of course, fit this smaller hole. When installing a new valve stem, tighten it until it wedges tight at the top of the plug, and then drill through the valve stem, using the existing hole in the valve plug. Do this carefully to avoid enlarging the existing hole in the valve plug. If a new valve plug is to be used, always use a new valve stem, and drill the groove pin hole through the valve plug and stem.

MAINTENANCE

To Replace TFE V-Ring Packing
(See Figure 7)

1. Remove the actuator from the body.
2. Remove the packing flange nuts (Key 23).
3. Remove nuts or cap screws (Key 16) and take the bonnet off the body. The valve plug (Key 2) may come out with the bonnet, but it can easily be pulled free.
4. Remove the packing flange (Key 21), felt wiper ring (Key 30), and the packing follower (Key 31). Pull out the old packing with a packing hook, being careful to avoid scratching the packing box wall. The packing may also be pushed out using a rod inserted through the hole in the bottom of the bonnet.
5. Clean packing box and all metal parts—spring (Key 26), washer (Key 28), and packing box ring (Key 29).
6. Replace the valve plug and install the bonnet on the body, using new gaskets.

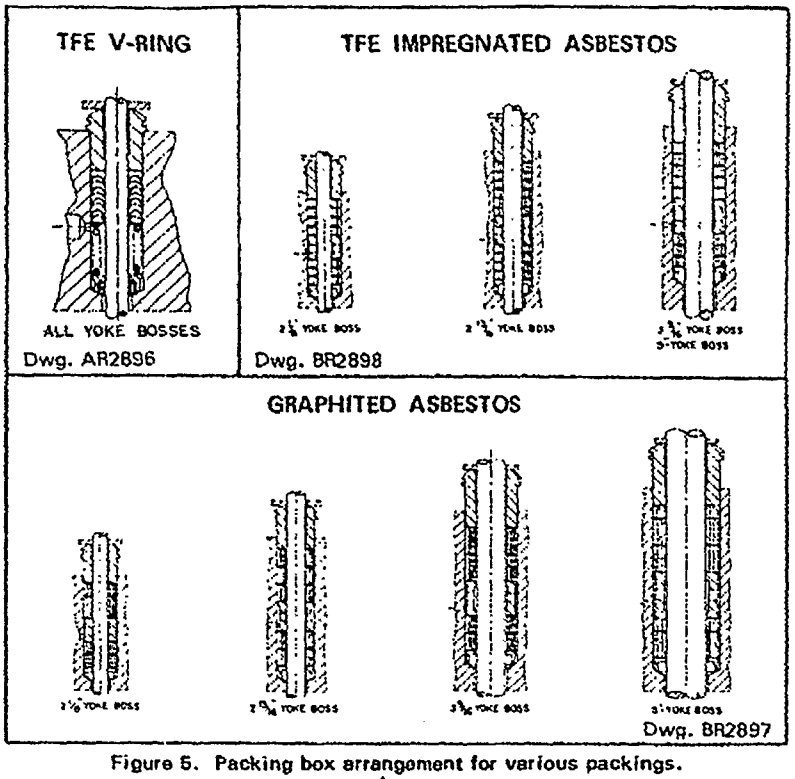

Figure 5. Packing box arrangement for various packings.

7. Install new packing and associated parts in the sequence shown in Figure 5. Be careful not to damage the packing during installation. Replace the packing flange nuts and tighten as far as they will go.
8. Mount actuator and set the stem connector to obtain required travel as outlined on Page 6.

Note: A similar procedure can be followed for TFE impregnated asbestos packing and graphited asbestos packing. Since these packing come in split rings, however, it is possible to replace them without removing the actuator from the body. The arrangement of packing rings above and below the lantern ring is shown in Figure 5. Packing flange nuts should be tightened only enough to stop leakage.

Grinding In Seating Surfaces

A certain amount of leakage should be expected with metal-to-metal seating in any valve body. If the leakage becomes excessive, however, the condition of the seating surfaces of the valve plug and seat ring can be improved by grinding. (Large nicks and cuts should be machined out rather than ground out.) Many grinding compounds are available commercially. Use a good quality one, or make your own with a mixture of 280 grit carborundum compound and solidified vegetable oil. White lead should be applied to the seat to prevent excessive cutting or tearing during grinding. The bonnet must be bolted to the body during the grinding procedure to position the cage and seat ring properly, and also to help align the valve plug with the seat ring. A simple grinding tool can be made from a piece of strap iron, locked to the valve plug stem with nuts. After grinding, remove bonnet, clean seating surfaces, and test for shutoff. Repeat grinding procedure if leakage is still excessive.

Note: On the Design "ED" body, leakage past the piston ring is also possible, so even with good seating surfaces, some leakage may still be noticed.

Bellows Seal Replacement (See Figure 13)

1. After actuator is disconnected and taken off the body, remove nuts (Key 16) and lift off the bonnet. If the valve stem, bellows seal and valve plug assembly comes out with the bonnet, simply separate it from the bonnet by pulling it free.
2. Unscrew the valve plug stem (Key 7) from the bellows seal assembly (Key 38).
3. Remove cap screws (Key 41) from the lower flange of the bellows seal assembly.
4. Unscrew the bellows seal assembly from the connection stud (Key 35). Use a wrench on the flats of the shaft extending out the top of the bellows seal assembly, and on the hex of the connection stud near the valve plug end of it.
5. Install the new bellows seal assembly by screwing it onto the connection stud. Make sure that the

MAINTENANCE

anti-rotator (Key 39) and the travel stop (Key 37) are in place.

6. Bolt the bellows seal assembly to the bellows seal adaptor (Key 34) with cap screws.
7. Screw the valve plug stem into the shaft of the bellows seal assembly.
8. Using all new gaskets between the bellows seal adaptor and the body, and between the bellows seal adaptor and the bonnet, mount the bonnet on the body. Install and tighten nuts (Key 16).
9. If it were necessary to remove packing box parts in the disassembly, install them as described in the section "To Replace TFE V-Ring Packing" on Page 5.

Making Up Stem Connector (See Figure 6)

A. Normally Open Control Valve (Type 657 Actuator)

1. Move the valve plug to the closed position.
2. Screw the locknuts (Key 4) on the stem, and set the travel indicator on these nuts with the "cupped" portion downward.

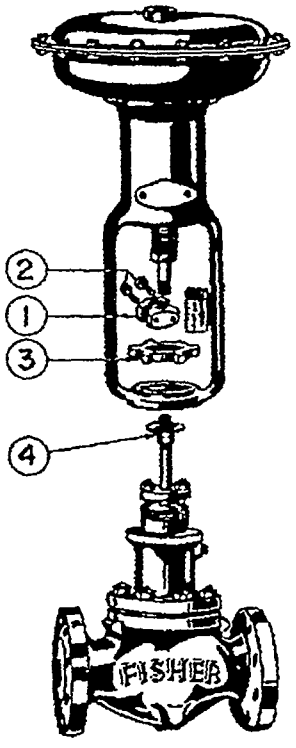

Dwg. BP8911

Figure 6. Exploded view showing how diaphragm actuator mounts on easy-e body. Numbered parts are stem connector (1), cap screws (2), yoke locknut (3), and stem locknuts (4).

3. Pull the valve plug stem up the required travel and attach the stem connector (Key 1), making sure that there is full engagement of the actuator stem threads. Install the two cap screws (Key 2) in the stem connector, but tighten them only slightly at this time. Tighten stem locknuts slightly to position the travel indicator properly.
4. The travel indicator should show the valve to be wide open with no pressure on the diaphragm. If it doesn't, loosen screws that hold the travel indicator scale, and shift the scale to the required position.
5. Apply and vary pressure to the diaphragm case and observe the valve travel. Make sure the valve plug seats on the seat ring. If the travel is not correct, it can be changed by screwing the valve plug stem into or out of the stem connector. Turn the stem by using a wrench on the locknuts; never use a pipe wrench or pliers on the stem itself. When the travel is set properly, lock the stem locknuts against the stem connector, and tighten the cap screws in the stem connector.

Note: A procedure similar to that described above can also be followed for Type 470 piston actuators.

B. Normally Closed Control Valve (Type 667 Actuator)

1. Same as Step 1 in Section A above.
2. Same as Step 2 in Section A above.
3. Apply full loading pressure to the diaphragm case to move the actuator stem to the extreme upward position. Attach the stem connector, making sure that there is full engagement of the actuator stem threads. Install the two cap screws in the stem connector, but tighten them only slightly at this time. Tighten stem locknuts slightly to position the travel indicator properly.
4. The travel indicator should show the valve to be wide open with full loading pressure applied to the diaphragm case, or closed with no pressure on the diaphragm. If it doesn't, loosen screws that hold the travel indicator scale, and shift the scale to the required position.
5. Same as Step 5 in Section A above.

Serial Number

A serial number is assigned to each easy-e valve body, and it should always be referred to in correspondence and parts orders. This serial number can be found stamped on the periphery of the top body flange. When ordering parts, also give the ten-character part numbers shown in the Parts Reference.

Parts Reference

ALL PARTS PERTAIN TO DESIGN "ES" AND "ED" BODIES UNLESS OTHERWISE INDICATED

KEY 1 - VALVE BODY - IRON

Valve Body Without Drain Plug Tapping

End Connections	Body Size, Inches					
	1	1-1/2	2	2-1/2	3	4
Screwed	2R2748 1901	2R2976 1901	2R3190 1902	...	...	...
125 lb. FF Flg.	2R2746 1901	2R2974 1901	2R3188 1901	2R3763 1901	2R3409 1902	2R3567 1902
250 lb. RF Flg.	2R2747 1901	2R2975 1901	2R3189 1902	2R3764 1902	2R3410 1902	2R3568 1902

KEY 1 - VALVE BODY - IRON

Valve Body With Drain Plug Tapping

End Connections	Body Size, Inches					
	1	1-1/2	2	2-1/2	3	4
Screwed	2R2874 1901	2R2979 1901	2R3193 1902	...	...	...
125 lb. FF Flg.	2R2749 1901	2R2977 1901	2R3191 1901	2R3765 1901	2R3411 1902	2R3569 1902
250 lb. RF Flg.	2R2750 1901	2R2978 1901	2R3192 1902	2R3766 1902	2R3412 1902	2R3570 1902

KEY 1 - VALVE BODY - STEEL

Valve Body Without Drain Plug Tapping

End Connections	Body Size, Inches					
	1	1-1/2	2	2-1/2	3	4
Screwed	2R2712 2201	2R2940 2201	2R3154 2201	...	...	...
150 lb. RF Flg.	2R2703 2201	2R2931 2201	2R3145 2201	2R3729 2201	2R3375 2201	2R3527 2201
300 lb. RF Flg.	2R2705 2201	2R2933 2201	2R3147 2201	2R3731 2201	2R3377 2201	2R3529 2201
600 lb. RF Flg.	2R2707 2201	2R2935 2201	2R3149 2201	2R3733 2201	2R3379 2201	2R3533 2201
150 lb. RTJ Flg.	2R2704 2201	2R2932 2201	2R3146 2201	2R3730 2201	2R3376 2201	2R3528 2201
300 lb. RTJ Flg.	2R2708 2201	2R2934 2201	2R3148 2201	2R3732 2201	2R3378 2201	2R3530 2201
600 lb. RTJ Flg.	2R2708 2201	2R2936 2201	2R3150 2201	2R3734 2201	2R3380 2201	2R3534 2201
Socket Weld	2R2711 2201	2R2939 2201	2R3153 2201	...	...	...
Butt Weld Sch. 40	2R2709 2201	2R2937 2201	2R3151 2201	2R3735 2201	2R3381 2201	2R3535 2201
Butt Weld Sch. 80	2R2710 2201	2R2938 2201	2R3152 2201	2R3736 2201	2R3382 2201	2R3536 2201

NOTE: If a valve body in a different material is required, replace the material code number (2201) in the part numbers above with one of the following material codes:

Body Material	316 SS	C-5 Chrome Moly	WC-9 Chrome Moly
Material Code No.	3309	2902	2903

KEY 1 - VALVE BODY - STEEL

Valve Body With Drain Plug Tapping

End Connections	Body Size, Inches					
	1	1-1/2	2	2-1/2	3	4
Screwed	2R2722 2201	2R2950 2201	2R3164 2201	...	...	...
150 lb. RF Flg.	2R2713 2201	2R2941 2201	2R3155 2201	2R3737 2201	2R3383 2201	2R3537 2201
300 lb. RF Flg.	2R2715 2201	2R2943 2201	2R3157 2201	2R3739 2201	2R3385 2201	2R3588 2201
600 lb. RF Flg.	2R2717 2201	2R2945 2201	2R3159 2201	2R3741 2201	2R3387 2201	2R3592 2201
150 lb. RTJ Flg.	2R2714 2201	2R2942 2201	2R3156 2201	2R3738 2201	2R3384 2201	2R3538 2201
300 lb. RTJ Flg.	2R2718 2201	2R2944 2201	2R3158 2201	2R3740 2201	2R3386 2201	2R3539 2201
600 lb. RTJ Flg.	2R2718 2201	2R2946 2201	2R3160 2201	2R3742 2201	2R3388 2201	2R3542 2201
Socket Weld	2R2721 2201	2R2949 2201	2R3163 2201	...	...	...
Butt Weld Sch. 40	2R2719 2201	2R2947 2201	2R3161 2201	2R3743 2201	2R3389 2201	2R3543 2201
Butt Weld Sch. 80	2R2720 2201	2R2948 2201	2R3162 2201	2R3744 2201	2R3390 2201	2R3544 2201

NOTE: If a valve body in a different material is required, replace the material code number (2201) in the part numbers above with one of the following material codes:

Body Material	316 SS	C-5 Chrome Moly	WC-9 Chrome Moly
Material Code No.	3309	2902	2903

Parts Reference

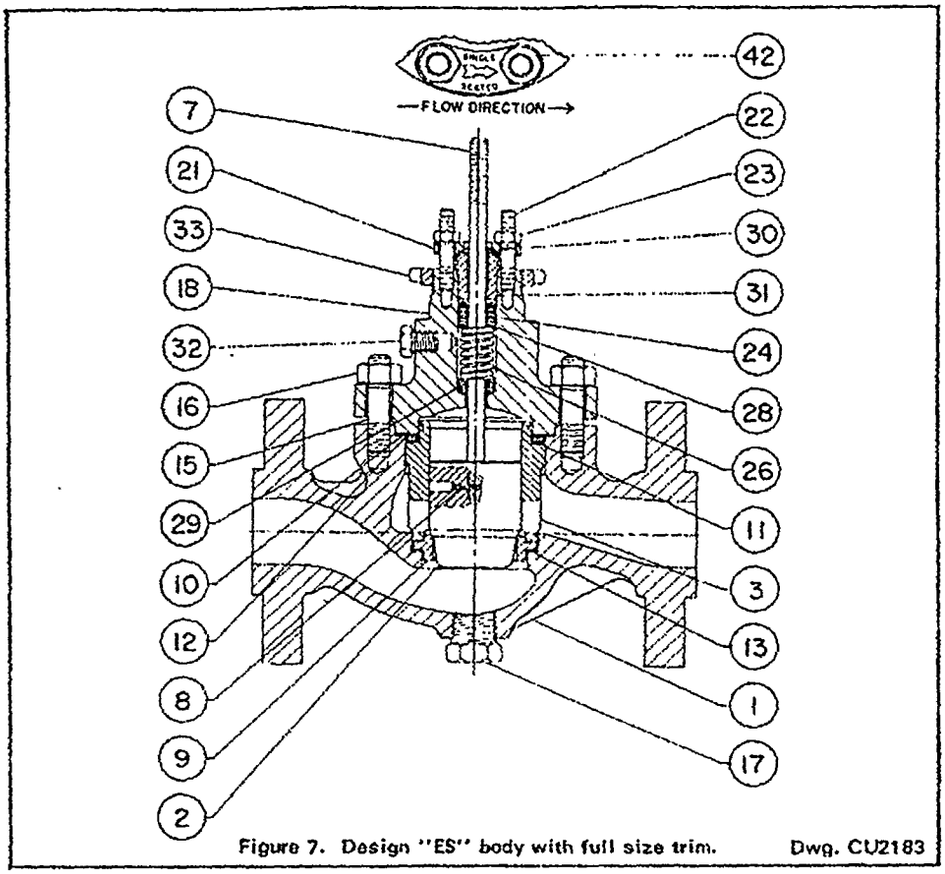

Figure 7. Design "ES" body with full size trim. Dwg. CU2183

ALL PARTS PERTAIN TO DESIGN "ES" AND "ED" BODIES UNLESS OTHERWISE INDICATED

KEY 2 - VALVE PLUG

416 Stainless Steel (Hardened)

Body Size, In.	For Stem Size, In.	Design "ES"			Design "ED"
		Equal Percentage	Linear	Quick Opening	Balanced
1	3/8	1U2169 4617	1U2165 4617	1U2161 4617	1U2157 4617
	1/2	1U2170 4617	1U2166 4617	1U2162 4617	1U2158 4617
1-1/2	3/8	1U2211 4617	1U2207 4617	1U2203 4617	1U2199 4617
	1/2	1U2212 4617	1U2208 4617	1U2204 4617	1U2200 4617
2	1/2	1U2253 4617	1U2249 4617	1U2245 4617	1U2241 4617
	3/4	1U2254 4617	1U2250 4617	1U2246 4617	1U2242 4617
2-1/2	1/2	1U2295 4617	1U2291 4617	1U2287 4617	1U2283 4617
	3/4	1U2296 4617	1U2292 4617	1U2288 4617	1U2284 4617
3	1/2	1U2337 4617	1U2333 4617	1U2329 4617	1U2325 4617
	3/4	1U2338 4617	1U2334 4617	1U2330 4617	1U2326 4617
4	1/2	1U2385 4617	1U2379 4617	1U2373 4617	1U2367 4617
	3/4	1U2386 4617	1U2380 4617	1U2374 4617	1U2368 4617
	1	1U2387 4617	1U2381 4617	1U2375 4617	1U2369 4617

NOTE: For restricted trim, the valve plug part numbers are determined as follows:

Body Size, In.	Use Part Numbers
1-1/2 x 1	Same as for 1" body, 3/8" or 1/2" stem
2 x 1	Same as for 1" body, 1/2" stem
2-1/2 x 1-1/2	Same as for 1-1/2" body, 1/2" stem
3 x 2	Same as for 2" body, 1/2" or 3/4" stem
4 x 2-1/2	Same as for 2-1/2" body, 1/2" or 3/4" stem

NOTE: If valve plug is required in 316 stainless steel, replace the material code number (4617) in the part numbers above with material code 3507.

BLUE

Parts Reference

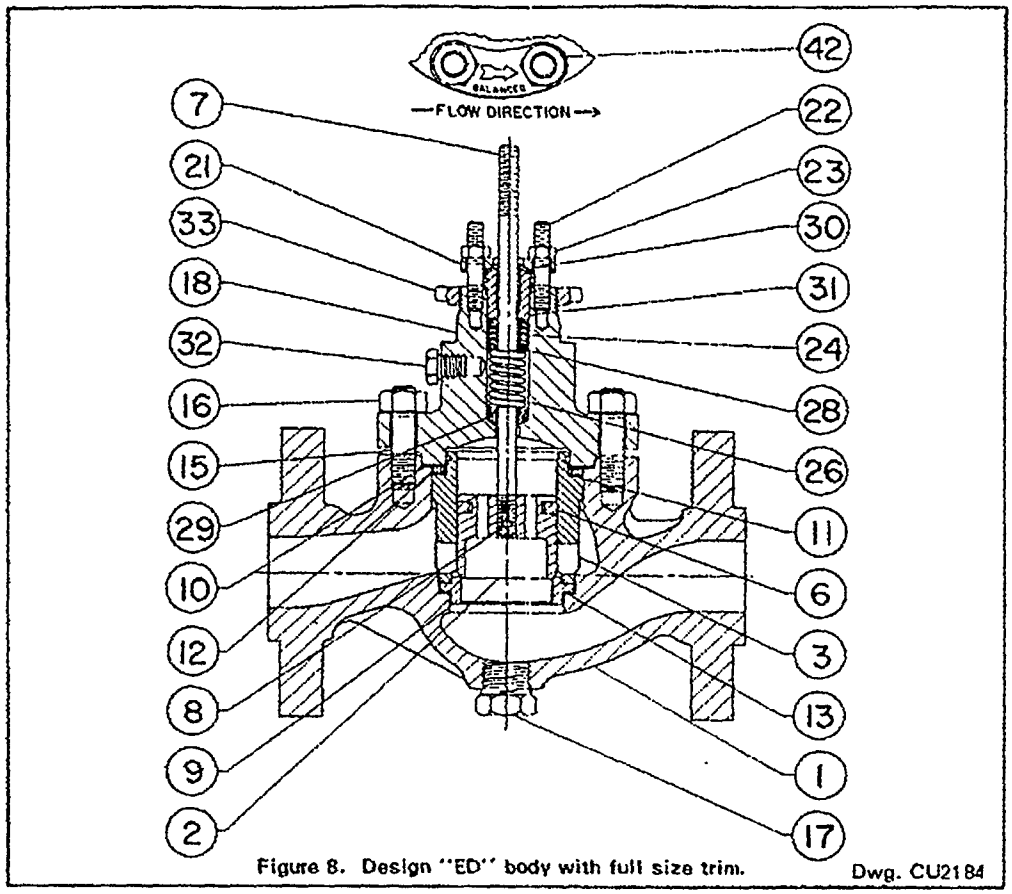

Figure 8. Design "ED" body with full size trim. Dwg. CU2184

ALL PARTS PERTAIN TO DESIGN "ES" AND "ED" BODIES UNLESS OTHERWISE INDICATED

KEY 2 - MICRO-FORM VALVE PLUG—DESIGN "ES" ONLY

416 Stainless Steel (Hardened)

Body Size, In.	For Stem Size, In.	Port Size, In.				
		1/4	3/8	1/2	3/4	1
1 & 1-1/2	3/8	1U2885 4617	1U2886 4617	1U2887 4617	1U2888 4617	1U2889 4617
	1/2	1U2890 4617	1U2891 4617	1U2892 4617	1U2893 4617	1U2894 4617
2	1/2	1U2890 4617	1U2891 4617	1U2892 4617	1U2893 4617	1U2894 4617

NOTE: If valve plug is required in 316 stainless steel, replace the material code number (4617) in the part numbers above with material code 3507.

KEY 2 - MICRO-FLUTE VALVE PLUG—DESIGN "ES" ONLY

416 Stainless Steel (Hardened)

Body Size, In.	For Stem Size, In.	1/4" Port		
		1 Flute	2 Flutes	3 Flutes
1 & 1-1/2	3/8	1U2871 4617	1U2872 4617	1U2873 4617
	1/2	1U2878 4617	1U2879 4617	1U2880 4617
2	1/2	1U2878 4617	1U2879 4617	1U2880 4617

NOTE: If valve plug is required in 316 stainless steel, replace the material code number (4617) in the part numbers above with material code 3507.

Parts Reference

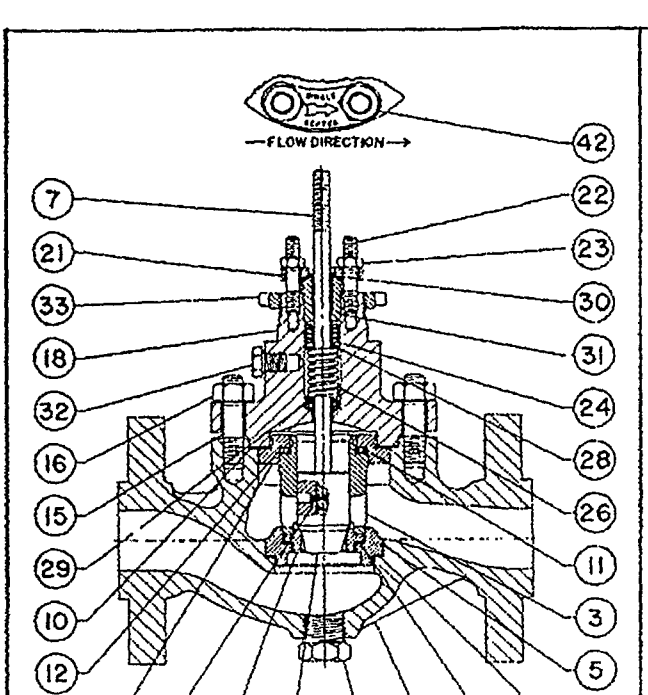

Figure 9. Design "ES" body with restricted trim.

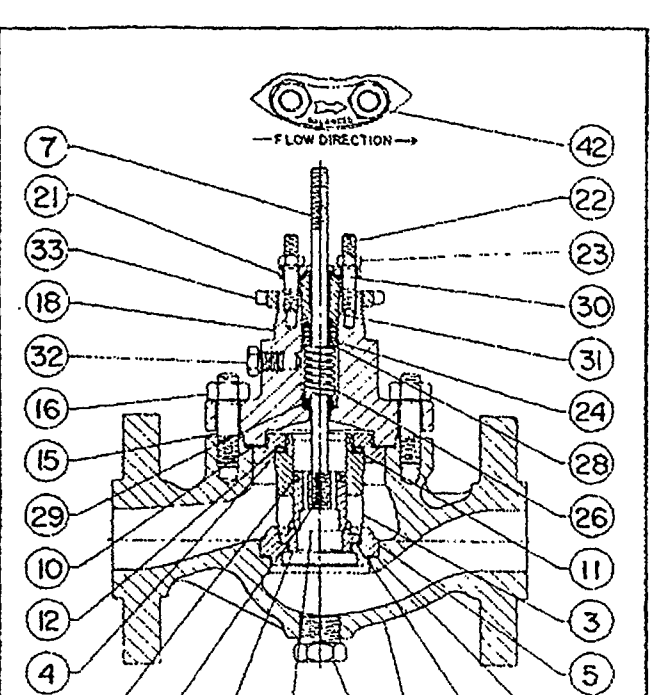

Figure 10. Design "ED" body with restricted trim.

ALL PARTS PERTAIN TO DESIGN "ES" AND "ED" BODIES UNLESS OTHERWISE INDICATED

KEY 3 - CAGE

17-4PH Stainless Steel (Hardened)

Body Size, In.	Design "ES"	Design "ED"		
	Quick Opening	Equal Percentage	Linear	Quick Opening
1, 1-1/2 x 1 & 2 x 1	2U2150 3327	2U2153 3327	2U2156 3327	2U2150 3327
1-1/2 & 2-1/2 x 1½	2U2192 3327	2U2195 3327	2U2198 3327	2U2192 3327
2 & 3 x 2	2U2234 3327	2U2237 3327	2U2240 3327	2U2234 3327
2-1/2 & 4 x 2-1/2	2U2276 3327	2U2279 3327	2U2282 3327	2U2276 3327
3	2U2318 3327	2U2321 3327	2U2324 3327	2U2318 3327
4	2U2360 3327	2U2363 3327	2U2366 3327	2U2360 3327

KEY 3 - CAGE-DESIGN "ES" ONLY

(for Micro-Form and Micro-Flute Valve Plugs)

17-4PH Stainless Steel (Hardened)

1" Body	1-1/2" Body	2" Body
2U2150 3327	1U2867 3327	1U2869 3327

KEYS 4 AND 5 - RESTRICTED TRIM ADAPTORS

Iron and Steel Bodies - Steel Adaptors

Part Description	Body Size, In.				
	1-1/2 x 1	2 x 1	2½ x 1½	3 x 2	4 x 2-1/2
Key 4 - Cage Adaptor	1U2218 2449	1U1207 2449	1U2302 2449	1U1246 2201	1U1251 2201
Key 5 - Seat Ring Adaptor	Not Req'd.	1U2262 2449	1U2304 2449	1U2346 2201	1U2396 2201

NOTE: For part numbers of adaptors in other materials, replace the material code (2249 or 2201) in part numbers above with the following material code:

Body Size, In. (1½ x 1, 2 x 1, and 2½ x 1½)

Body Material	316 SS	C-5 Chrome Moly	WC-9 Chrome Moly
Adaptor Material and Code No.	316 SS (3507)	316 SS (3507)	316 SS (3507)

Body Size, In. (3 x 2 and 4 x 2½)

Body Material	316 SS	C-5 Chrome Moly	WC-9 Chrome Moly
Adaptor Material and Code No.	316 SS (3309)	C-5 (2902)	WC-9 (2903)

Parts Reference

ALL PARTS PERTAIN TO DESIGN "ES" AND "ED" BODIES UNLESS OTHERWISE INDICATED

KEY 6 - PISTON RING - DESIGN "ED" ONLY

Standard Piston Ring - Carbon Filled TFE (for temp. to 450°F)

High Temperature Piston Ring - Graphite (for temp. over 450°F)

Body Size, In.	1, 1½ x 1, 2 x 1	1-1/2, 2½ x 1½	2, 3 x 2	2-1/2, 4 x 2½	3	4
Standard	1U2173 0509	1U2215 0509	1U2257 0509	1U2299 0509	1U2341 0509	1U2391 0509
Hi-Temp.	1U2174 0510	1U2216 0510	1U2258 0510	1U2300 0510	1U2342 0510	1U2392 0510

KEY 7 - VALVE PLUG STEM - 316 STAINLESS STEEL

For easy-e bodies used with Series 470, 657, 667, and most other Fisher Valve Actuators.

BODIES WITH FULL SIZE TRIM

Body Size, In.	Port Size, In.	Stem Size, In.	Plain Bonnet Stem Length, In.	Plain Bonnet Part Number	Extension Bonnet Stem Length, In.	Extension Bonnet Part Number	Bellows Seal Bonnet Stem Length, In.	Bellows Seal Bonnet Part Number
1	1-5/16	3/8	8-7/8	1U3888 3516	12-1/4	1U2177 3516	8-3/4	1R2885 3516
		1/2	11-13/16	1U3890 3516	15-13/16	1U2179 3516	11-1/4	1R2888 3516
1-1/2	1-7/8	3/8	8-7/8	1U3888 3516	12-1/4	1U2177 3516	8-3/4	1R2885 3516
		1/2	11-13/16	1U3890 3516	15-13/16	1U2179 3516	11-1/4	1R2888 3516
2	2-5/16	1/2	12-1/4	1K5869 3516	16-1/4	1U2263 3516	12-3/8	1U3892 3516
		3/4	14-5/8	1U2265 3516	19	1L4001 3516	...	...
2-1/2	2-7/8	1/2	12-5/8	1U2305 3516	16-9/16	1U2306 3516	12-3/8	1U3892 3516
		3/4	15	1U2308 3516	19-3/8	1K5880 3516	...	...
3	3-7/16	1/2	12-5/8	1U2305 3516	16-9/16	1U2306 3516	12-3/8	1U3892 3516
		3/4	15	1U2308 3516	19-3/8	1K5880 3516	...	...
4	4-3/8	1/2	12-5/8	1U2305 3516	16-9/16	1U2306 3516	12-7/8	2R3693 3516
		3/4	15-1/2	1K5877 3516	19-7/8	1K5881 3516	15-1/4	1K5876 3516
		1 †	19-1/4	1U2175 3516	...	...	...	...
		1 ‡	18-1/4	1K7590 3516	...	...	...	...
BODIES WITH RESTRICTED TRIM								
1-1/2	1-5/16	3/8	9-3/8	1U2236 3516	12-3/4	1U2270 3516	8-3/4	1R2885 3516
		1/2	12-1/16	1U7400 3516	16-1/16	1U7401 3516	11-1/4	1R2888 3516
2	1-5/16	1/2	11-5/8	1U5309 3516	15-5/8	1U5310 3516	12	1U3891 3516
2-1/2	1-7/8	1/2	11-5/8	1U5309 3516	15-5/8	1U5310 3516	11-5/8	1U3889 3516
3	2-5/16	1/2	12-1/4	1K5869 3516	16-1/4	1U2263 3516	12	1U3891 3516
		3/4	14-5/8	1U2265 3516	19	1L4001 3516	...	...
4	2-7/8	1/2	12-5/8	1U2305 3516	16-9/16	1U2306 3516	12-7/8	2R3693 3516
		3/4	15	1U2308 3516	19-3/8	1K5880 3516	14-3/4	1U3894 3516
BODIES WITH MICRO-FORM AND MICRO-FLUTE VALVE PLUGS								
1, 1-1/2	All *	3/8	8-7/8	1U3888 3516	12-1/4	1U2177 3516	8-3/4	1R2885 3516
		1/2	11-5/8	1U5309 3516	15-5/8	1U5310 3516	11-1/4	1R2888 3516
2	All *	1/2	11-5/8	1U5309 3516	15-5/8	1U5310 3516	12-3/8	1U3892 3516

* 1/4", 3/8", 1/2", 3/4", and 1" port sizes. † Type 657 and Series 470. ‡ Type 667.

KEY 8 - GROOVE PIN

PART NUMBER	NAME OF PART AND MATERIAL
	Groove Pin, 316 SS
1B5991 3507	For 3/8" Stem
1B5996 3507	For 1/2" Stem
1F7236 3507	For 3/4" Stem
1D2697 3507	For 1" Stem

KEY 9 - SEAT RING - DESIGN "ES" ONLY
416 STAINLESS STEEL (Hardened)

For use with Micro-Form & Micro-Flute Valve Plugs

Port Size, In.	Body Size, In. 1	1-1/2	2
1/4	1U2852 4617	1U2857 4617	1U2862 4617
3/8	1U2853 4617	1U2858 4617	1U2863 4617
1/2	1U2854 4617	1U2859 4617	1U2864 4617
3/4	1U2855 4617	1U2860 4617	1U2865 4617
1	1U2856 4617	1U2861 4617	1U2866 4617

NOTE: If seat ring is required in 316 SS, replace the material code number (4617) in the part numbers above with material code 3507.

KEY 9 - SEAT RING

For use with all valve plugs EXCEPT Micro-Form and Micro-Flute. Material as tabulated.

Seat Ring Material	Body Size, In. 1, 2 x 1	1-1/2 x 1	1-1/2, 2½ x 1½	2, 3 x 2	2-1/2, 4 x 2½	3	4
416 SS Hardened	1U2225 4617	1U2220 4617	1U2219 4617	1U2226 4617	1U2227 4617	1U2228 4617	1U2229 4617
316 SS	1U2225 3507	1U2220 3507	1U2219 3507	1U2226 3309	1U2227 3309	1U2228 3309	1U2229 3309

Parts Reference

ALL PARTS PERTAIN TO DESIGN "ES" AND "ED" BODIES UNLESS OTHERWISE INDICATED

KEYS 10, 11, 12, 13 AND 14 - GASKETS

Body Size, In.	Key 10 Bonnet, Asbestos	Key 11 Cage, Asbestos	Key 12 Spiral Wound, 316L SS-Asbestos	Key 13 Seat Ring, Asbestos	Key 14 Seat Ring Adaptor, Asbestos
1	1R2859 0402	1R2861 0402	1R2860 9928	1R2862 0402	Not Req'd
1-1/2	1R3101 0402	1R3100 0402	1R3099 9928	1R3098 0402	Not Req'd
1-1/2 x 1†	1R3101 0402	1R2861 0402*	1R2860 9928	1R3098 0402	Not Req'd
2	1R3299 0402	1R3298 0402	1R3297 9928	1R3296 0402	Not Req'd
2 x 1	1R3299 0402	1R2861 0402*	1R2860 9928	1R2862 0402	1R3296 0402
2-1/2	1R3847 0402	1R3846 0402	1R3845 9928	1R3844 0402	Not Req'd
2½ x 1½	1R3847 0402	1R3100 0402*	1R3099 9928	1R3098 0402	1R3844 0402
3	1R3484 0402	1R3483 0402	1R3482 9928	1R3481 0402	Not Req'd
3 x 2	1R3484 0402	1R3298 0402*	1R3297 9928	1R3296 0402	1R3481 0402
4	1R3724 0402	1R3723 0402	1R3722 9928	1J5047 0402	Not Req'd
4 x 2½	1R3724 0402	1R3846 0402*	1R3845 9928	1R3844 0402	1J5047 0402

* 2 cage gaskets required with restricted trim.
† Requires another cage gasket, 1U2152 0402, between cage and body.

KEYS 15 AND 16 - BODY STUD BOLTS AND NUTS (CAP SCREWS IN IRON BODIES) - Steel

Body Size, In.	Stud Bolt & Cap Screw Size, In.	Number Req'd	Steel Bodies			Iron Bodies
			Key 15-Studs For Plain & Extension Bonnets	Key 15-Studs For Bellows Seal Bonnet	Key 16 Nuts	Key 15-Cap Screws for Plain Bonnet
1	9/16-12	4	1R2848 3101	1R2895 3101	1C3306 2407	1R2811 2405
1½	1/2 -13	8	1K2429 3101	1R3089 3101	1A3772 2407	1A4533 2405
1½ x 1	1/2 -13	8	1U2352 3101	1U2351 3101	1A3772 2407	1A3444 2405
2, 2 x 1	1/2 -13	8	1K2429 3101	1R3361 3101	1A3772 2407	1A4533 2405
2½ 2½ x 1½	9/16-12	8	1R2848 3101	1R3873 3101	1C3306 2407	1R2811 2405
3, 3 x 2	5/8 -11	8	1R3506 3101	1R3508 3101	1A3760 2407	1A4541 2405
4, 4 x 2½	3/4 -10	8	1R3690 3101	1P5902 3101	1A3520 2407	1A4402 2405

KEY 18 - VALVE BODY BONNET - PLAIN (Same Material as Body)

Body Size, In.	Boss Size, In.	Bonnet Material				
		Iron	Steel	Chrome Moly C-5	Chrome Moly WC-9	316 SS
1	2-1/8	2R2820 1902	2R2814 2302	2R2812 2902	2R2812 2903	2R2812 3309
	2-13/16	2R2821 1902	2R2813 2201	2R2813 2902	2R2813 2903	2R2813 3309
1-1/2	2-1/8	2R3112 1902	2R3107 2302	2R3105 2902	2R3105 2903	2R3105 3309
	2-13/16	2R3113 1902	2R3106 2201	2R3106 2902	2R3106 2903	2R3106 3309
2	2-13/16	2R3310 1902	2R3305 2302	2R3303 2902	2R3303 2903	2R3303 3309
	3-9/16	2R3311 1902	2R3304 2201	2R3304 2902	2R3304 2903	2R3304 3309
2-1/2	2-13/16	2R3856 1902	2R3853 2302	2R3851 2902	2R3851 2903	2R3851 3309
	3-9/16	2R3857 1902	2R3852 2201	2R3852 2902	2R3852 2903	2R3852 3309
3	2-13/16	2R3493 1902	2R3490 2302	2R3488 2902	2R3488 2903	2R3488 3309
	3-9/16	2R3494 1902	2R3489 2201	2R3489 2902	2R3489 2903	2R3489 3309
4	2-13/16	2R3673 1902	2R3669 2302	2R3666 2902	2R3666 2903	2R3666 3309
	3-9/16	2R3674 1902	2R3667 2201	2R3667 2902	2R3667 2903	2R3667 3309
	5	2R3675 1902	2R3668 2201	2R3668 2902	2R3668 2903	2R3668 3309

Parts Reference

ALL PARTS PERTAIN TO DESIGN "ES" AND "ED" BODIES UNLESS OTHERWISE INDICATED

KEY 18 - EXTENSION & BELLOWS SEAL BONNETS FOR STEEL BODIES

Steel Bonnets

Body Size, In.	Boss Size, In.	Extension		Bellows Seal
		Tapped Boss	Untapped Boss	Tapped Boss
1	2-1/8	2R2826 2201	2R2736 2201	3R2893 2201
	2-13/16	2R2827 2201	2R2852 2201	3R2894 2201
1-1/2	2-1/8	2R3118 2201	2R3124 2201	3R3126 2201
	2-13/16	2R3119 2201	2R3127 2201	3R3128 2201
2	2-13/16	2R3315 2201	2R3321 2201	3R3319 2201
2-1/2	2-13/16	2R3860 2201	2R3861 2201	3R3867 2201
	3-9/16	2R3862 2201	2R3863 2201	...
3	2-13/16	2R3497 2201	2R3498 2201	3R3504 2201
	3-9/16	2R3499 2201	2R3500 2201	...
4	2-13/16	2R3200 2201	2R3678 2201	3R3688 2201
	3-9/16	2R3202 2201	2R3680 2201	3R3689 2201

NOTE: If an extension or bellows seal bonnet in a different material is required, replace the material code number (2201) in the part numbers above with one of the following material codes:

Bonnet Material	316 SS	C-5 Chrome Moly	WC-9 Chrome Moly
Material Code No.	3309	2902	2903

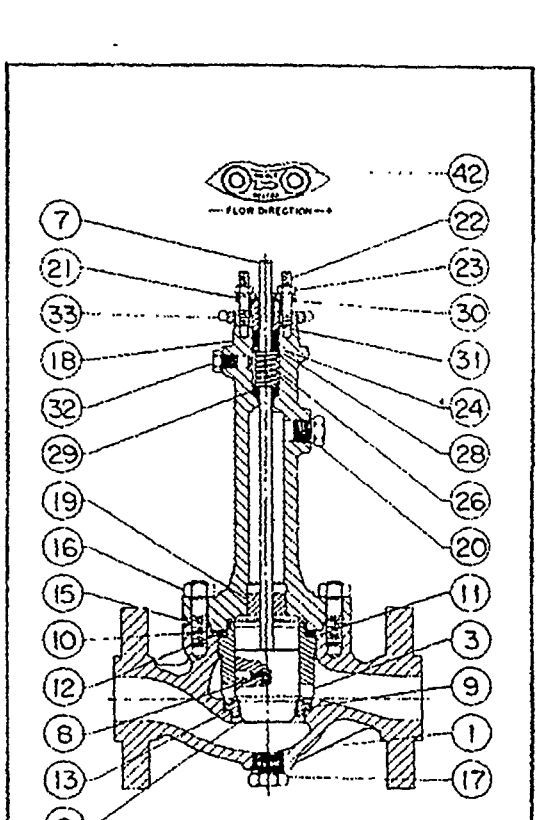

Figure 11. Design "ES" body with extension bonnet.

KEYS 17, 19 AND 20

KEY	PART NUMBER	NAME OF PART AND MATERIAL
17		Body Drain Plug, 3/4" NPT
	1A7715 2466	Steel, for iron, steel and chrome moly bodies
	1A7715 3507	316 SS, for 316 SS body
19		Bushing, For Extension Bonnets Only, 416 SS
	1K8864 3513	1" and 1-1/2" bodies, 3/8" stem
	1L1409 3513	1", 1-1/2" and 2" bodies, 1/2" stem
	1K4348 3513	2-1/2", 3" and 4" bodies, 1/2" stem
	1R3518 3513	2-1/2", 3" and 4" bodies, 3/4" stem
20		Pipe Plug, For Extension and Bellows Seal Bonnets Only, 1/2" NPT
	1A3692 2466	Steel, for steel and chrome moly bodies
	1A3692 3507	316 SS, for 316 SS body

Parts Reference

ALL PARTS PERTAIN TO DESIGN "ES" AND "ED" BODIES UNLESS OTHERWISE INDICATED

KEYS 21 TO 31 - PACKING BOX PARTS - TFE V-RING PACKING

Key	Name of Part and Material	Body Size, In.			
		1, 1-1/2 3/8" Stem	1 thru 4 1/2" Stem	2 thru 4 3/4" Stem	4 1" Stem
21	Packing Flange, Steel	1E9437 2410	1E9442 2307	1E9448 2307	0V0024 2505
22	Packing Flange Stud, Steel 2 Req'd	1E9441 3103	1E9444 3103	1E9449 3103	0V0025 3103
23	Packing Flange Nut, Steel 2 Req'd	1E9440 2411	1E9445 2411	1E9446 2411	1L6921 2411
24	TFE V-Ring Packing Set*	1R2900 0101	1R2902 0101	1R2904 0101	1R2906 0101
26	Packing Spring, 316 SS	1F1254 3701	1F1255 3701	1F1256 3701	1D5829 3701
28	Special Washer, 316 SS	1F1252 3604	1F1251 3604	1F1250 3604	1H9822 3604
29	Packing Box Ring, 17-4PH SS	1J8731 3501	1J8732 3501	1J8733 3501	1J8734 3501
30	Upper Wiper, Felt	1J8726 0633	1J8727 0633	1J8728 0633	1J8729 0633
31	Packing Follower, 316 SS	1E9439 3507	1E9443 3507	1E9447 3507	1H9823 3507

* See table below for individual part numbers for TFE packing.

KEY 24 - TFE V-RING PACKING

Name of Part	Stem Size, In.			
	3/8	1/2	3/4	1
Female Adaptor	1F1244 0101	1F1243 0101	1F1242 0101	1H9824 0101
Packing 3 Req'd	1C7526 0101	1C7527 0101	1C7528 0101	1C7529 0101
Male Adaptor	1F1248 0101	1F1247 0101	1F1246 0101	1H9825 0101
Lower Wiper Ring	1J8721 0101	1J8722 0101	1J8723 0101	1J8724 0101

KEY 24 - GRAPHITED ASBESTOS PACKING

(Keys 21,22,23,29,30 & 31 are same as for TFE V-ring packing.)

Name of Part	Stem Size, In.			
	3/8	1/2	3/4	1
Lantern * Ring, 316SS	1F3641 3507	1J9623 3507	0N0284 3507	0U0997 3507
Packing (No. Req'd)	1D7474 0105 (3)	1D7487 0105 (5)	1D7490 0105 (2)	1D7518 0105 (2)
Packing (No. Req'd)	1D7475 0105 (1)	...	1D7491 0105 (2)	1D7496 0105 (3)

* Lantern ring replaces packing spring.

KEY 24 - TFE IMPREGNATED ASBESTOS PACKING

(Keys 21,22,23,29,30 & 31 are same as for TFE V-ring packing.)

Name of Part	Stem Size, In.			
	3/8	1/2	3/4	1
Lantern * Ring, 316SS	1F3641 3507	1J9623 3507	0N0284 3507	0U0997 3507
Packing (No. Req'd)	1E3189 0104 (7)	1E3190 0104 (10)	1E3191 0104 (8)	1E7234 0104 (8)

* Lantern ring replaces packing spring.

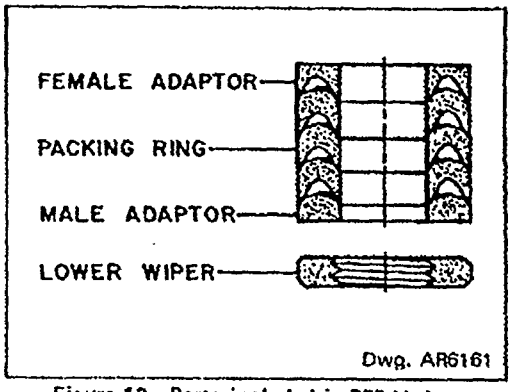

Figure 12. Parts included in TFE V-ring packing set.

KEYS 32 AND 33

KEY	PART NUMBER	NAME OF PART AND MATERIAL
32	1A7675 2409	Pipe Plug, Steel, 1/4" NPT
33		Yoke Locknut, Steel
	1E7930 2306	For 2-1/8" Yoke Boss
	1E8074 2306	For 2-13/16" Yoke Boss
	1E8327 2306	For 3-9/16" Yoke Boss

NOTE: Bodies with 5" yoke boss (1" stem) use cap screws and nuts (8 each) to mount the actuator on the body. Part numbers are as follows:

Cap Screws - 1A9362 2405
Nuts - 1A3433 2412

Parts Reference

ALL PARTS PERTAIN TO DESIGN "ES" AND "ED" BODIES UNLESS OTHERWISE INDICATED

KEYS 34 TO 41 - PARTS FOR BELLOWS SEAL BONNET

Key No.	Name of Part and Material	1" Body, 2-1/8" or 2-13/16" Boss	1-1/2" Body, 2-1/8" or 2-13/16" Boss	2" Body, 2-13/16" Boss	2-1/2" Body, 2-13/16" Boss	3" Body, 2-13/16" Boss	4" Body 2-13/16" or 3-9/16" Boss
34	Bellows Seal Adaptor, Steel *	1R2882 2449	1R3130 2449	1R3356 2449	1R3872 2449	1R3509 2449	2R3698 2449
35	Connection Stud, 316 SS +	1U2182 3507	1U2182 3507	1U2268 3507	1U2311 3507	1U2311 3507	1U2217 3507
36	Anti-Rotator, 17-4PH SS	1R2875 3501	1R2875 3501	1R3362 3501	1R3362 3501	1R3362 3501	1R3702 3501
37	Travel Stop, 316 SS	1R2872 3507	1R2872 3507	1R3359 3507	1R3359 3507	1R3359 3507	1R3701 3507
38	Bellows Seal Assembly, 316 SS	1R2881 000A	1R2881 000A	2R3368 000A	2R3368 000A	2R3368 000A	2R3705 000A
39	Anti-Rotator Gasket, Asbestos (2 Req'd)	1R2877 0402	1R2877 0402	1R3363 0402	1R3363 0402	1R3363 0402	1R3703 0402
40	Bonnet Gasket, Asbestos	1R2891 0402	1R3101 0402	1R3299 0402	1R3847 0402	1R3484 0402	1R3724 0402
41	Cap Screw, 416 SS (4 Req'd)	1A4078 3513	1A4078 3513	1A3816 3513	1A3816 3513	1A3816 3513	1A3449 3513

+ Connection stud part number is different when a body with 2-13/16" boss (1/2" stem) has restricted trim. New part numbers are as follows:

Micro-Form and Micro-Flute Valve Plugs	Other Valve Plugs
1" body - 1U2181 3507	1-1/2" body - 1U2155 3507
1-1/2" body - 1U2181 3507	2" body - 1U5301 3507
2" body - 1U5301 3507	2-1/2" body - 1U5302 3507

* For bellows seal adaptor in other materials, replace the material code number (2449) in the part numbers for Key 34 with one of the following material codes:

Body Material	316 SS	C-5 Chrome Moly	WC-9 Chrome Moly
Adaptor Material and Code No.	316 SS (3507)	316 SS (3507)	316 SS (3507)

KEY 42 - FLOW DIRECTION PLATE

PART NUMBER	NAME OF PART AND MATERIAL
	Flow Direction Plate, 410 SS
1U2365 3603	1" Body
1U2394 3603	1-1/2" Body
1U2442 3603	2" Body
1U2443 3603	2-1/2" Body
1U2444 3603	3" Body
1U2445 3603	4" Body

Recommended Spare Parts for Stock

Key 6 - Piston Ring ('ED' Body)
Key 10 - Bonnet Gasket
Key 11 - Cage Gasket
Key 12 - Spiral Wound Gasket
Key 13 - Seat Ring Gasket
Key 14 - Seat Ring Adaptor Gasket (Restricted Trim)
Key 24 - Packing
Key 39 - Anti-Rotator Gasket (Bellows Seal)
Key 40 - Bonnet Gasket (Bellows Seal)

Always give complete ten-character part numbers when ordering spare parts.

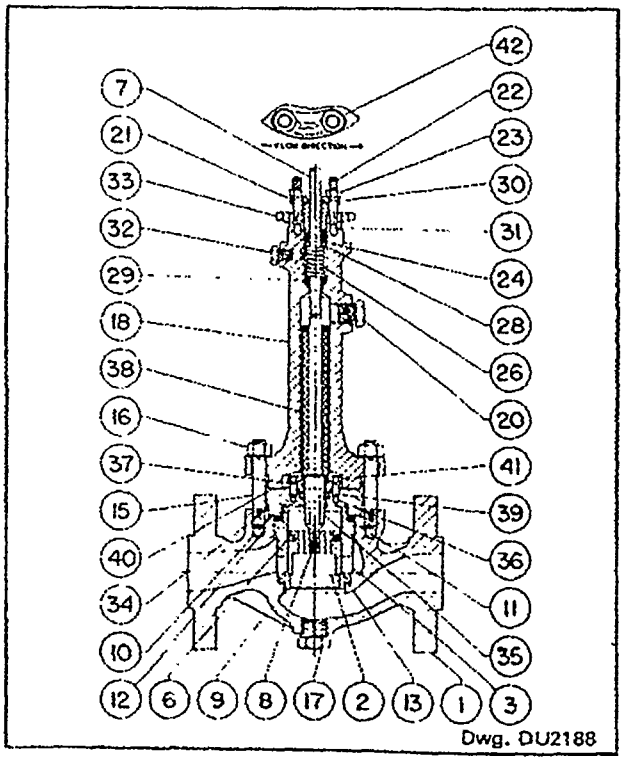

Figure 13. Design "ED" body with bellows seal bonnet.

FISHER GOVERNOR COMPANY

Main Plants and Corporate Offices: Marshalltown, Iowa 50158

OTHER PLANTS: Woodstock, Ont., Coraopolis, Pa., McKinney, Texas, Toluca, Edo de Mexico
OVERSEAS PLANTS: Fisher Governor Co., Ltd., Rochester, Kent, England
Cowdenbeath, Scotland / Elliott-Automation, Cerney, France;
Revesby, N.S.W. Australia / Tokico, Ltd., Kawasaki City, Japan

If it flows through pipe, chances are it's controlled by

FISHER Controls