AMERICAN STANDARD

PLAINTIFF'S EXHIBIT

ASI-152

# KEWANEE® SCOTCH GENERATOR

BALANCED DESIGN

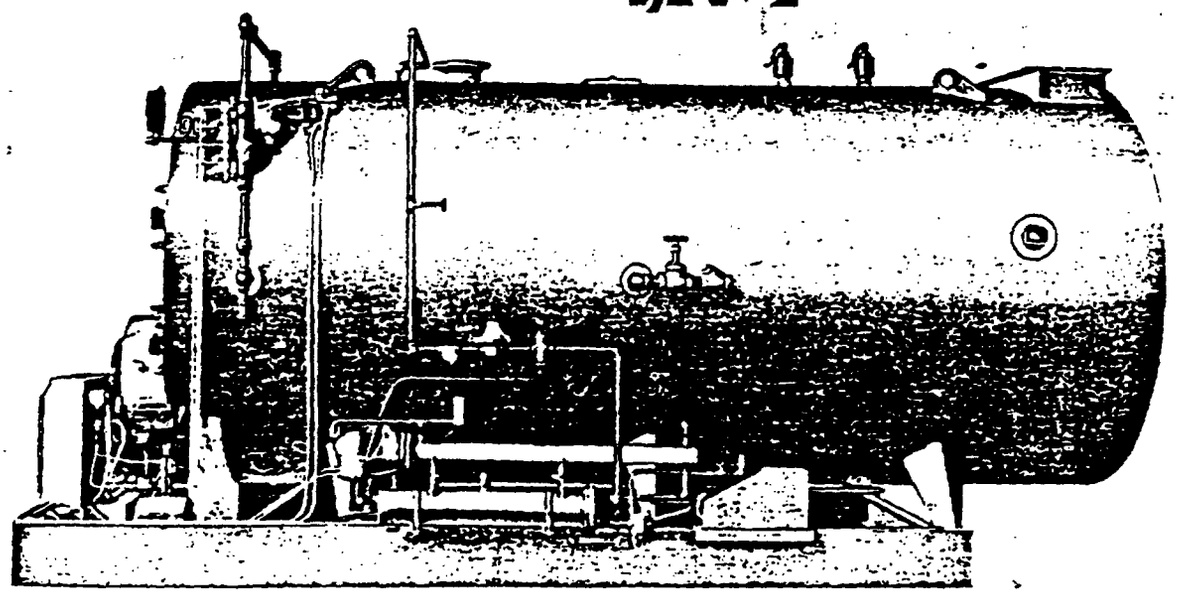

20 THROUGH 750 HORSEPOWER

*for oil—gas—combination gas-oil*

HIGH or LOW PRESSURE
STEAM or WATER

AS 000049

Bulletin 96-12-96A

# KEWANEE
# SCOTCH GENERATOR

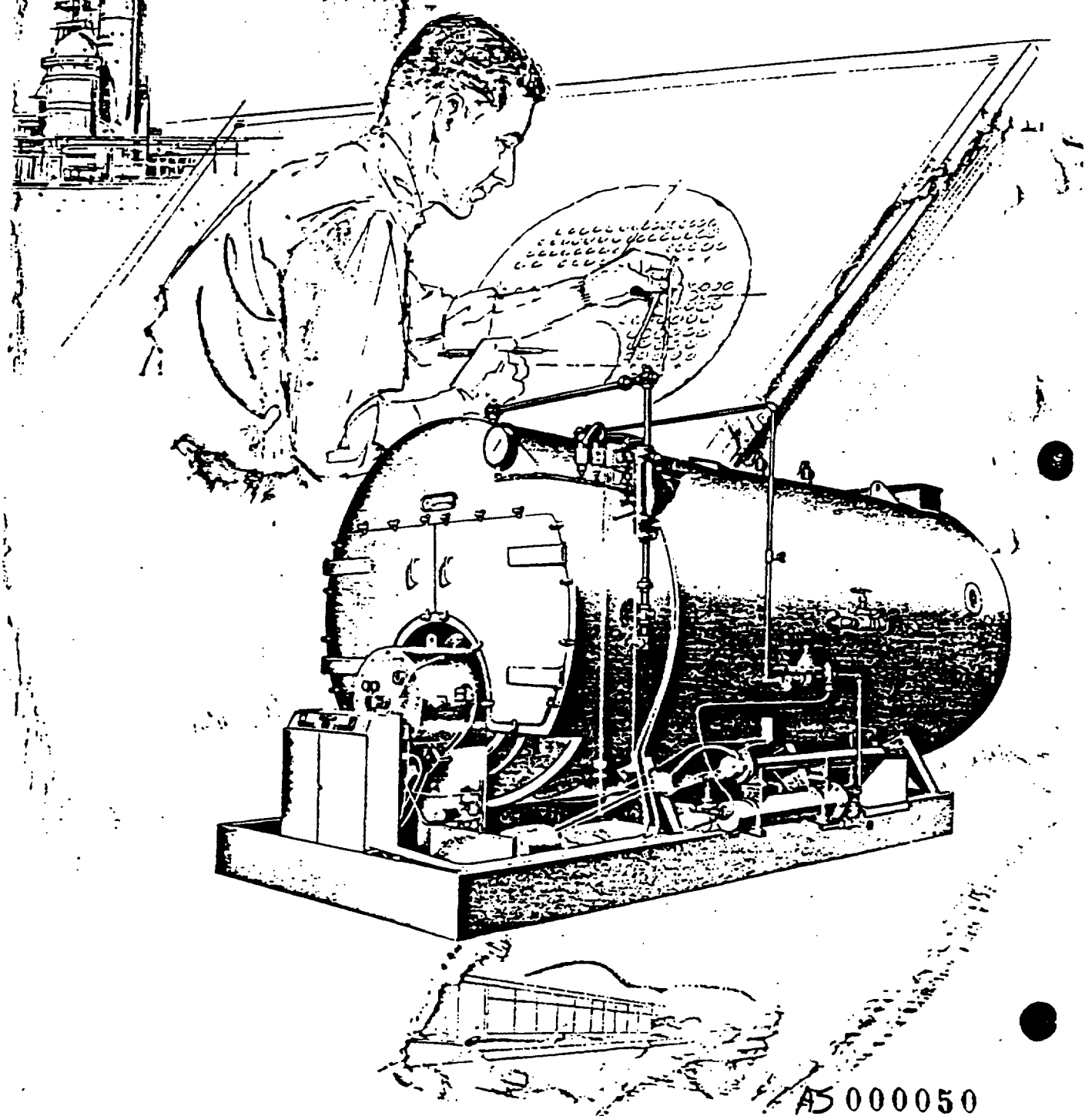

AS 000050

Copyright 1966 by American Standard Inc

Since product improvement is a continuing effort at American-Standard, the right is reserved to make reasonable changes of any kind without notice

# *for* BALANCED DESIGN

**Kewanee has been building various types of heat generating equipment for over 100 years. During that time we have discussed heat and process steam requirements with thousands of contractors, engineers, and architects. We now have more Kewanee boiler units in service than any two competitors combined. From these users, installers, and specifiers, we have found that more than basic fundamentals are required to satisfy the needs and desires of today. We have designed the Kewanee Scotch Generator to fill these needs.**

***FOR EXAMPLE:***

**MOST USERS WANT** the boiler, burner, controls, and accessories under the single responsibility of one reputable manufacturer. The Kewanee Scotch Generator is a completely packaged, factory-assembled unit—designed, engineered, built and serviced by the largest manufacturer of air conditioning, heating and ventilating equipment.

**MOST USERS WANT** to use locally available, low-cost fuels to generate heat. Available fuels vary widely in heat content and burning characteristics—from viscous residual oil to stable light oils—from liquified petroleum gas to by-product or manufactured gas. The Kewanee Scotch Generator burner is specially designed for any commercially available liquid or gaseous fuel that the customer specifies.

**MOST USERS WANT** modern architectural design with small space requirements. Building cost and appearance demands minimum space for boiler equipment in addition to the elimination of unsightly smokestacks. The Kewanee Scotch Generator combines a compact three-pass scotch design with forced draft firing for minimum floor space requirements and only a stub vent to discharge products of combustion.

**MOST USERS WANT** maximum, not minimum, safety of operation. Compliance with local and national codes means that equipment conforms only to minimum safety standards. The Kewanee Scotch Generator provides, as a standard for all units, safety features that exceed all minimum requirements. Kewanee safety features include electronic flame safeguard, updraft gas flow, pre and post purge of combustible gases, dual operating limit controls and dual gas valves for maximum customer protection.

**MOST USERS WANT** to burn the least possible amount of fuel. Boiler unit efficiency depends on how well the fuel is burned and how effectively the boiler heat transfer surfaces absorb the heat. The Kewanee Scotch Generator utilizes efficient forced draft burner equipment to promote combustion and extract the maximum energy from each pound of fuel consumed. Large furnace tube and water-back design provide a greater ratio of primary to secondary heating surface. Primary heating surface transfers more heat per square foot than secondary surfaces because it is exposed to the radiant heat of the flame as well as hot gases.

**MOST USERS WANT** maximum service life without major costly repairs. Unless preventive measures are incorporated into the basic design of the boiler, expansion and contraction set up destructive forces within the unit. The most detrimental of these forces is the stress put upon components by temperature differential. That is the variance in heat intensity from one point to another within a single part or component. The Kewanee Scotch Generator provides separate rear tube sheets at the end of the first and third passes, thereby reducing stresses which contribute to metal fatigue and resultant early failure.

**MOST USERS WANT** freedom from frequent replacement of parts which burn out, crack, or deteriorate with use. Heating surfaces (steel backed by water) have a greater resistance to deterioration than metal baffles, refractories, or seals which require periodic repair and replacement. The Kewanee Scotch Generator water-back design requires refractory only in the burner combustion zone—no refractory, no baffles, no seals are necessary in the rear of the boiler.

**MOST USERS WANT** easy maintenance. Since all equipment requires oiling, checking, and cleaning, ease of maintenance is an important consideration. The Kewanee Scotch Generator features "one-man" maintenance. Motors and controls may be checked from floor level. Large front and rear openings provide easy access to boiler tubes without disconnecting or removing any controls or components.

**MOST USERS WANT** a quality product backed by national testing standards. "Kewanee—The Standard of Quality in the Industry"—is our hallmark of excellence. Kewanee Scotch Generators meet or exceed ASME and UL standards, and are constructed to meet any customer-specified insurance or local code requirements.

**MOST USERS WANT** local service facilities and replacement parts. Down-time for repairs, whether on space heating, or process applications, must be held to a minimum by having qualified servicemen and ample parts stock readily available. The Kewanee Scotch Generator is backed by 120 local service outlets that furnish start up and 90-day free service after installation, and maintain a stock of repair parts for continued equipment service.

**These are some of the often overlooked features that you—the user, the contractor, or specifier—have told us you want and need. Combining all of these features into a balanced design has required years of practical field experience. If you measure these "balanced design" features against those offered by others, we are confident your choice will be . . . KEWANEE.**

AS 000051

# KEWANEE®

# SCOTCH GENERATOR

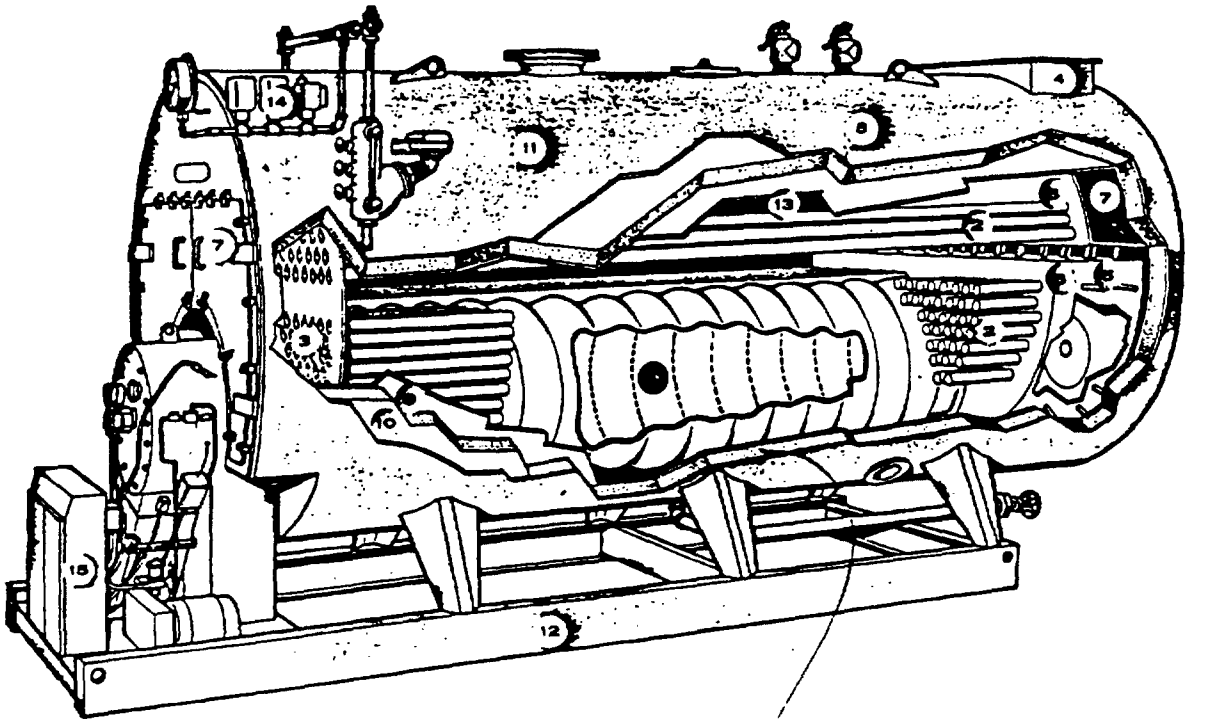

1 **LARGE FURNACE TUBE** . . . provides abundant volume for complete combustion and a greater proportion of primary heating surface. Assures quiet operation.

2 **THREE PASS DESIGN** . . . provides full 5 square feet of heating surface per horsepower.

3 **FIRE TUBES** . . . set in tube sheets, roller expanded, not welded, for permanent leak-proof fit.

4 **TOP REAR OUTLET** . . . ideally located for stub stack application.

5 **WATER-BACK DESIGN** . . . eliminates refractory baffles and seals. Increases primary heating surface.

6 **REAR TUBE SHEETS** . . . separate tube sheets at the end of first and third passes.

7 **FRONT AND REAR ACCESS OPENINGS** . . . for ease of inspection and cleaning.

8 **LARGE STEAM SPACE** . . . combined with abundant unbroken disengaging area, large water content, and integral steam separator assures steady water line and dry quality steam.

9 **SHELL** . . . extra heavy quality plate for strength and dependability.

10 **INSULATION** . . . completely insulated with mineral or glass fiber on full circumference of shell.

11 **JACKET** . . . factory installed heavy gauge enameled steel with escutcheon plates around openings.

12 **STURDY STEEL SKIDS** . . . offers ease in handling and balanced weight distribution.

13 **LARGE WATER CONTENT** . . . results in less fuel dollar loss in off-cycle and guarantees adequate reserve for fluctuating system demands.

14 **SAFETY CONTROLS** . . . high safety limits, burner modulating controls . . . factory mounted and wired.

15 **CONTROL CABINET** . . . master programming and flame safeguard relays, switching relays, motor magnetic starters, numbered terminal strips, indicating lights . . . mounted and wired in heavy gauge steel, dust-proof cabinet.

A5000052

# features BALANCED DESIGN

### THREE PASS DESIGN

The amount and location of heating surface is of major importance in determining boiler efficiency. Although the arrangement of this heating surface into 2, 3 or 4 passes has no effect on efficiency in a well-designed boiler, the number of passes does determine overall dimensions, baffling requirements and flue gas pressure drop which, in turn, determines fan motor requirements.

The Kewanee Scotch Generator Three Pass Design provides ample well-designed heating surface with a high ratio of primary to secondary heating surface for highest operating efficiency.

Three Pass Design also permits a top rear smoke outlet ideally located for stub stack application and minimum interference with piping and controls. Compact proportioned overall dimension permits installation in limited space. Low gas pressure drop through the boiler reduces electrical power costs.

### HIGH QUALITY WELDED STEEL BOILER

The Kewanee Generator is formed from heavy quality steel, joined by deep penetration welds. Quality control begins with the inspection of raw materials, which must conform with rigid specifications, and is maintained *step by step*, throughout the construction of each individual unit. Every Kewanee Generator is inspected, tested, stamped, and a data sheet issued attesting to the fidelity of workmanship and material of the pressure vessel and its components. Physical and operational characteristics of the unit are certified to meet, or exceed, ASME Code requirements. High pressure shells are x-rayed and stress relieved.

(H) (ASME)

### WATER HEATING COILS

Standard Kewanee "KI" (instantaneous) and "KT" (tank) coils are available for low pressure units.

### ONE SOURCE RESPONSIBILITY

The entire generator is listed by Underwriters Laboratory (UL). The complete unit is the responsibility of one manufacturer. This responsibility includes boiler, burner, controls, and accessory equipment.

UL

### SEPARATE REAR TUBE SHEETS

A rear tube sheet for each gas temperature zone prevents internal stresses which may occur in a single tube sheet exposed to wide temperature differences.

This feature prevents short circuiting of hot gases and by-passing of fire tubes with the resultant high stack temperatures.

### EASY MAINTENANCE

Large access openings in rear combustion chamber and smokebox make rear tube sheets readily accessible for inspection. Large insulated gas-tight front doors permit easy inspection of front tube sheet and cleaning of tubes without disturbing burner components, fuel or power connections.

### PROVED DEPENDABILITY—PEAK PERFORMANCE

Modern concept based on experienced engineering—advanced design and top quality construction—assure highest efficiency, faithful performance, long dependable service. Ratings are conservative—five square feet of fireside heating surface per horsepower—provides adequate reserve capacity. Firing rates are carefully matched to heating surface. Flame size and shape are matched to furnace dimensions. These combined features assure minimum operating efficiency of 80%.

---

### GREATER PRIMARY HEATING SURFACE

Total square feet of heating surface is less important than total effectiveness of heating surface. One square foot of primary heating surface is 4 to 15 times as effective as one square foot of secondary heating surface.

| | PRIMARY | SECONDARY |
|---|---|---|
| Brand "A" | 7% | |
| Brand "B" | 9% | |
| Brand "C" | 11% | |
| Kewanee Scotch Generator | 14% | |

Kewanee provides more "high value" heating surface . . . more "effective" heating surface than offered by the three other major competitive brands on the market today.

### WATER COOLED BACK

The rear combustion chamber is entirely submerged in water . . . no refractory to deteriorate either from chemicals in fuel or from expansion and contraction . . . reduces costly maintenance and repairs . . . absorbs heat rather than reflecting heat on critical tube sheet areas.

Updraft water back design is more expensive to build, but costs the user less. Eliminates regular refractory repairs . . . eliminates baffle leakage which results in lower operating efficiency.

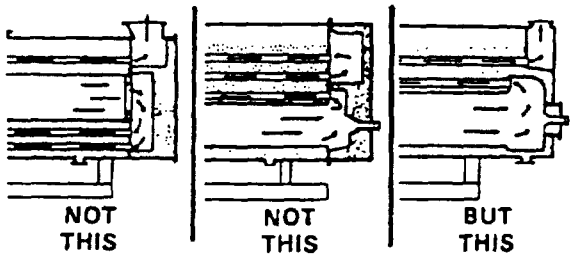


AS 000053

# KEWANEE

# SCOTCH GENERATOR

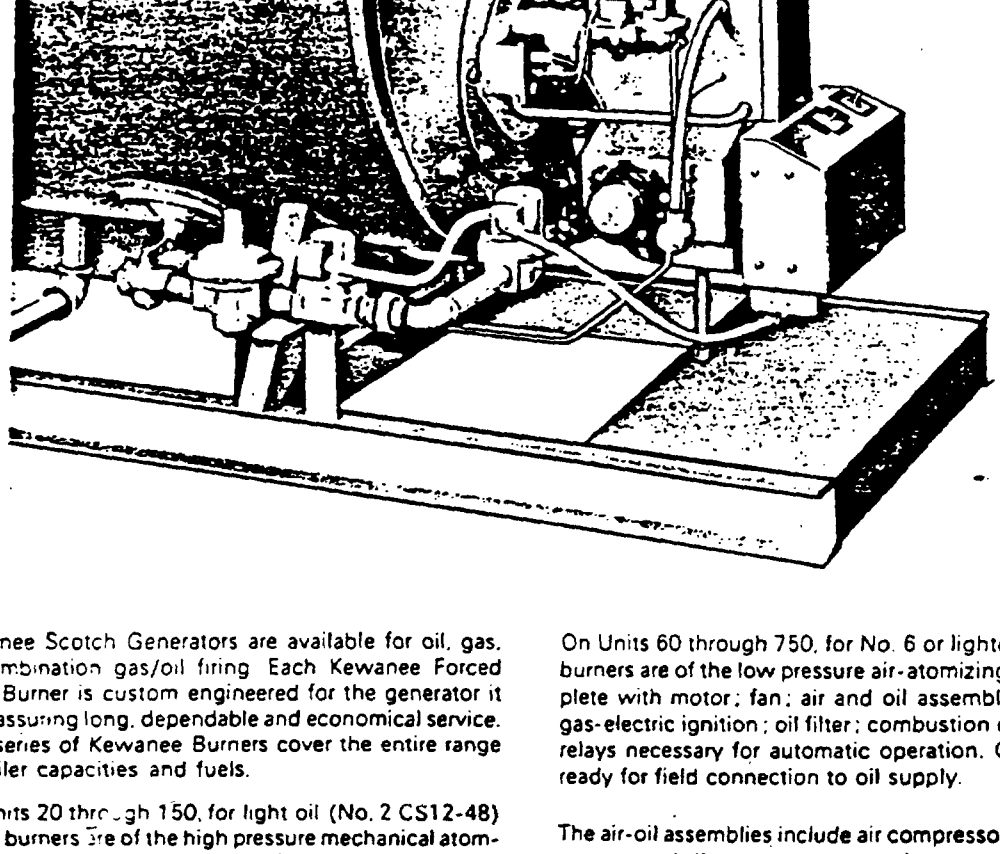

Kewanee Scotch Generators are available for oil, gas, or combination gas/oil firing. Each Kewanee Forced Draft Burner is custom engineered for the generator it fires, assuring long, dependable and economical service. Two series of Kewanee Burners cover the entire range of boiler capacities and fuels.

On Units 20 through 150, for light oil (No. 2 CS12-48) the oil burners are of the high pressure mechanical atomizing type, complete with motor; fan; oil pump; nozzle; ignition assembly (direct spark on Units 20 thru 50, gas-electric on Units 60 thru 150); oil filter; combustion controls and relays necessary for automatic operation. Oil piping is ready for field connection to oil supply.

On Units 60 through 750, for No. 6 or lighter oil, the oil burners are of the low pressure air-atomizing type, complete with motor; fan; air and oil assemblies; nozzle; gas-electric ignition; oil filter; combustion controls and relays necessary for automatic operation. Oil piping is ready for field connection to oil supply.

The air-oil assemblies include air compressor; oil pump; motors; and all necessary accessories to provide the fine oil atomization required for clean, efficient oil firing. A thermostatically controlled electric oil heater maintains uniform oil temperature to compensate for varying viscosities of residual oils.

---

## GAS BURNERS

Gas burners are of the multiport flame retention type, complete with motor; fan; gas-electric ignition; dual automatic gas valves; manual gas valve; gas pressure regulator; combustion controls and relays necessary for automatic operation. Gas piping is ready for field connection to gas supply.

## GAS-OIL BURNERS

Gas-oil combination burners include the features of both the gas burners and oil burners in a single unit. No burner modifications to change fuels—just a flip of a switch.

AS 000054

# BURNER FEATURES

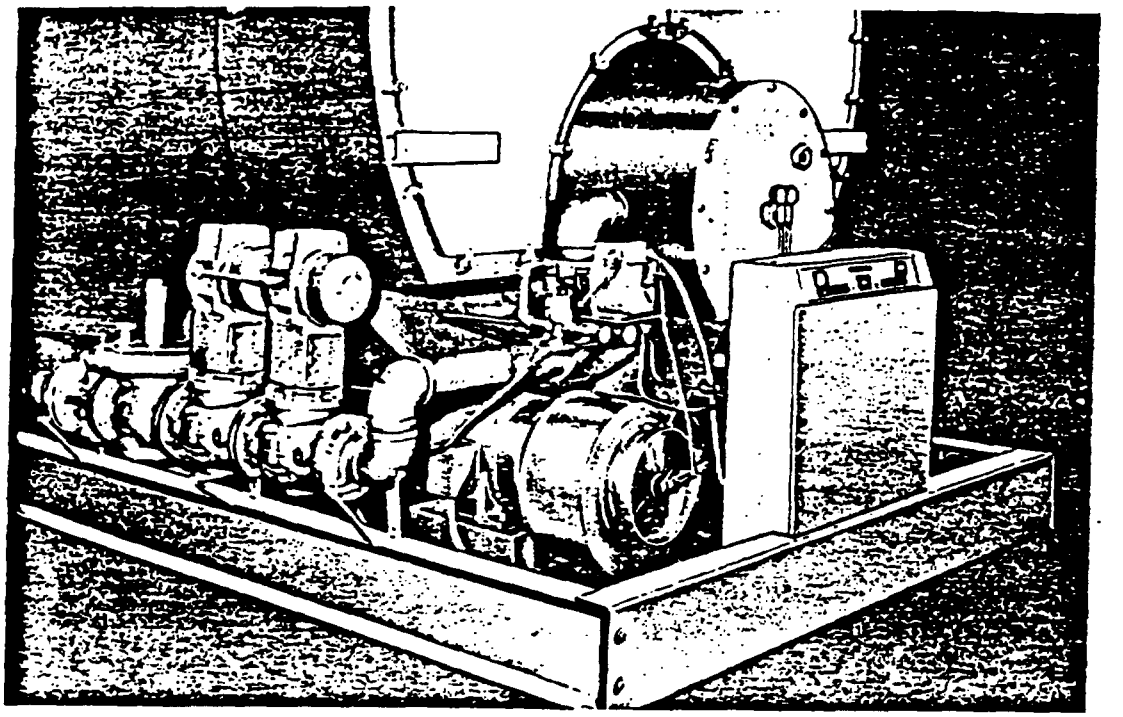

## EXCLUSIVE COMBINATION HEAD

Exclusive design of burner firing head provides quiet, stable combustion of gas or oil at all inputs. The annular gas ports and vaned air diffuser assure complete mixing of gas and air for stable operation under wide variations of gas pressure and other conditions without objectionable noise or pulsation

Swirling high velocity secondary air supply assures intimate mixing of fuel and air for clean, efficient firing.

## MAXIMUM SAFETY

Dual automatic main gas valves provide added protection against valve leakage. Dual high limit controls, low water cut-off and safety relief valves provide added protection against excessive temperature or pressure and low water conditions. Boiler passages are purged of possible accumulation of combustible gases both before and after each firing cycle. An electronic flame safeguard continuously monitors pilot and main flame combustion sequence.

## CONTROL CABINET

Electronic flame safeguard and programming system; switching relays; necessary magnetic starters, numbered terminal strips; indicating lights for major operations and fuel selector switch—all are mounted and wired in a heavy gauge steel, dust proof control cabinet. Wiring is ready for connection to source of power.

## MODEL DESIGNATION CHART

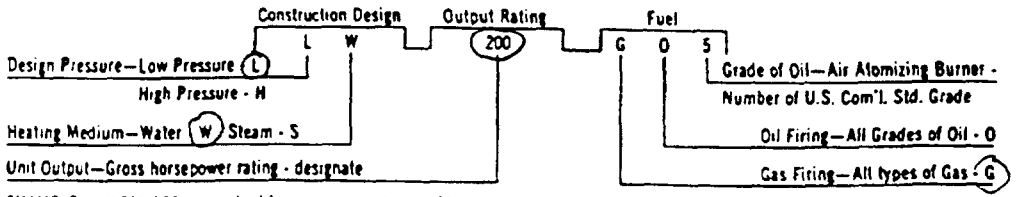


EXAMPLE LW-200-G05 is standard low pressure hot water 200 horsepower generator equipped for combination gas and No. 5 oil firing.

AS 000055

# KEWANEE

# SCOTCH GENERATOR

## Standard Equipment

### ALL UNITS

1. ASME Code Boiler
2. Three-pass Scotch Boiler Design with Water Back
3. Full Length Skid Type Base
4. Gas-Tight Construction
5. Pyrex Observation Ports (front & rear)
6. Access Openings (front & rear)
7. Roller Expanded Firetubes (2"—Units 20-200; 2½"—Units 250-750)
8. Top Vent (Units 60-750); Rear Vent (Units 20-50)
9. Metal Jacket with Mineral Fiber Insulation
10. Lifting Loops
11. Explosion Relief Door
12. Forced Draft Burner Assembly
13. Operating High Limit Control
14. Safety High Limit Control
15. Firing Sequence:
    On-Off (Units 20-50)
    High-Low-Off (Units 60-80)
    Modulating (Units 100-750)
16. Modutrol Motor to Control Air-Fuel Supply (Units 60-750)
17. Control Voltage—115 v., 60 cy., 1 ph.
    (Includes Reduced Voltage Transformer Where Required)
18. Control Cabinet including: Electronic Flame Safeguard and Programming Control; Control Circuit Fuse; Control Circuit Transformer (Units 40-750); Control Circuit Switch; Burner Switch; DC Voltmeter or Microammeter (Units 60-750); Manual Potentiometer (Modulating Units Only); Indicating Lights; Numbered Terminal Strip; Color Coded Wiring; Engraved Name Plates; and Necessary Relays and Magnetic Starters
19. Listed Standard and Selected Optional Equipment Mounted, Piped, Wired, Ready for Field Connection to Fuel, Water, Steam and Electricity. (Exceptions: Items shipped separately to prevent shipping damage.)
20. Factory Fire-Test
21. Starting Service (Startup and 90 days service)

### STEAM UNITS

1. No. 157 Combination Water Column, Low Water Cut-Off, and Pump Control
2. Safety Valves
3. Steam Gauge
4. Water Glass Gauge and Try Cocks
5. Manhole (Units 80-750)
6. Quick-Opening and Slow-Opening Blow-Off Valves (High Pressure Units)
7. Drain Valve (Low Pressure Units)

### HOT WATER UNITS

1. No. 63 Low Water Cut-Off
2. Relief Valves
3. Pressure Gauge
4. Thermometer
5. Drain Valve

### GAS UNITS 20-50

1. Multiple-Jet Flame Retention Type Gas Burner
2. UL Gas Control Group including: Automatic Operating Gas Valve, Automatic Safety Gas Valve, Gas Pressure Regulator, Gas Cock, Gas Pressure Gauge
3. Gas-Electric Ignition Assembly
4. Flame Rod Flame Detector
5. On-Off Firing Sequence
6. Air Flow Safety Switch

## Optional Equipment

### ALL UNITS

1. Flue Gas Temperature Gauge
2. Other Than Standard Voltages
3. Circuit Breaker
4. Alarm Bell
5. Instantaneous or Tank Type Water Coils (Low Pressure Units)
6. Controls for FM
7. Controls for FIA
8. One-Year Service Period

### STEAM UNITS

1. No. 193 Combination Water Column, Low Water Cut-Off, Pump Control and Alarm Switch
2. No. 51-2 Combination Low Water Cut-Off, Water Feeder and Alarm Switch (Low Pressure Units)
3. Second Low Water Cut-Off
4. Injector (High Pressure Units)
5. Higher than Standard Steam Working Pressure (Units 60-750)

### HOT WATER UNITS

1. No. 51-2 Combination Low Water Cut-Off, Water Feeder and Alarm Switch
2. Second Low Water Cut-Off
3. Higher than Standard Water Working Pressure (Units 60-750)

### GAS UNITS 20-50

1. High-Low-Off Firing Sequence (Units 40-50)
2. Modulating Firing Sequence (Units 40-50)
3. Lead Sulphide Flame Detector
4. Gas Controls for Other Than Standard Pressures
5. Gas Controls for Local Utility Requirements

A5000056

# 20-750 Bhp

## Standard Equipment

### GAS UNITS 60-750

1. Annular Port Flame Retention Type Gas Burner
2. UL Gas Control Group including: Automatic Motorized Gas Valve, Automatic Safety Gas Valve, Gas Pressure Regulator, Gas Volume Control Valve with Adjustable Cam Operator; Lubricated Plug Gas Cock, Gas Pressure Gauge
3. Gas-Electric Ignition Assembly
4. Lead Sulphide Flame Detector
5. Air Flow Safety Switch
6. Firing Sequence:
   High-Low-Off with Low Fire Start (Units 60-80)
   Modulating with Low Fire Start (Units 100-750)

### PRESSURE ATOMIZING OIL UNITS 20-50

1. Mechanical Pressure Atomizing Oil Burner for No. 2 Oil
2. Two Stage Oil Pump Assembly Direct-coupled to Burner Motor
3. Oil Nozzle (Dual on 40-50)
4. Oil Solenoid Valve
5. Direct Spark Electric Ignition Assembly
6. Photocell Flame Detector
7. Firing Sequence:
   On-Off with Fixed Fire (Units 20-30)
   On-Off with Low Fire Start (Units 40-50)
8. Oil Filter (not mounted)

### PRESSURE ATOMIZING OIL UNITS 60-150

1. Mechanical Pressure Atomizing Oil Burner for No. 2 Oil
2. Two Stage Oil Pump Assembly Mounted on Boiler Skid
3. Variable Flow Oil Nozzle
4. Oil Solenoid Valve
5. Oil Metering Valve
6. Gas-Electric Ignition Assembly
7. Lead Sulphide Flame Detector
8. Air Flow Safety Switch
9. Firing Sequence:
   High-Low-Off with Low Fire Start (Units 60-80)
   Modulating with Low Fire Start (Units 100-150)
10. Oil Filter (not mounted)

### AIR ATOMIZING OIL UNITS 60-750

1. Low Pressure Air Atomizing Oil Burner for No. 6 and Lighter Oil
2. Oil Pump Assembly Mounted on Boiler Skid. For Constant Hot Oil Circulation (No. 5 & 6 Oil) or Intermittent Operation (No. 2 & 4 Oil)
3. Air Unit Consisting of: Air Compressor; Air Pressure Regulating Valve; Motor; Inlet Air Filter; Air Proving Safety Switch; Air Pressure Gauge;
4. Air-Oil Nozzle
5. Oil Solenoid Valve
6. Oil Metering Valve with Adjustable Cam Operator
7. Gas-Electric Ignition Assembly
8. Lead Sulphide Flame Detector
9. Air Flow Safety Switch.
10. Firing Sequence:
    High-Low-Off with Low Fire Start (Units 60-80).
    Modulating with Low Fire Start (Units 100-750)
11. Thermostatically Controlled Electric Oil Heater (No. 4, 5 & 6 Oil).
12. Boiler Mounted Oil Heater (No. 6 Oil Units). Safety Type Below-Water-Line Heater with Pump Control (Water Units); Steam Heater with Modulating Valve and Trap (Steam Units)
13. Oil Strainer (not mounted)

### COMBINATION GAS-OIL UNITS

1. Manual Fuel Changeover Switch in Control Cabinet

## Optional Equipment

### GAS UNITS 60-750

1. Modulating Firing Sequence (Units 60-80)
2. Gas Controls for Other Than Standard Pressures
3. Gas Controls for Local Utility Requirements

### PRESSURE ATOMIZING OIL UNITS 20-50

1. High-Low-Off Firing Sequence (Units 40-50)
2. Modulating Firing Sequence (Units 40-50)
3. Lead Sulphide Flame Detector

### PRESSURE ATOMIZING OIL UNITS 60-150

1. Modulating Firing Sequence (Units 60-80)
2. Oil-Electric Ignition Assembly

### AIR ATOMIZING OIL UNITS 60-750

1. Modulating Firing Sequence (Units 60-80)
2. Oil-Electric Ignition Assembly
3. Remote Circulating Oil Pump

AS 000057

KEWANEE SCOTCH GENERATOR

# DIMENSIONAL DRAWINGS

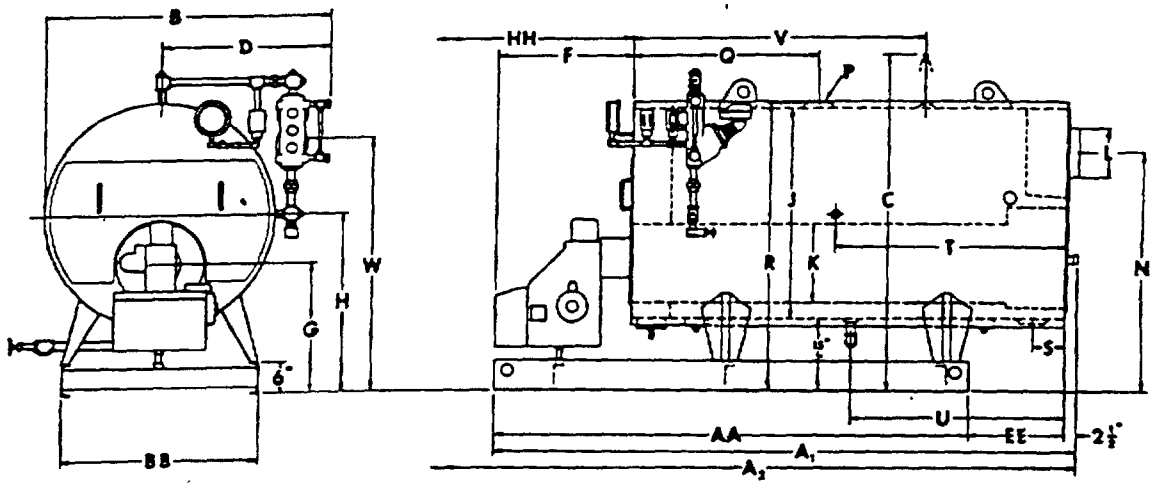


20 HP thru 50 HP

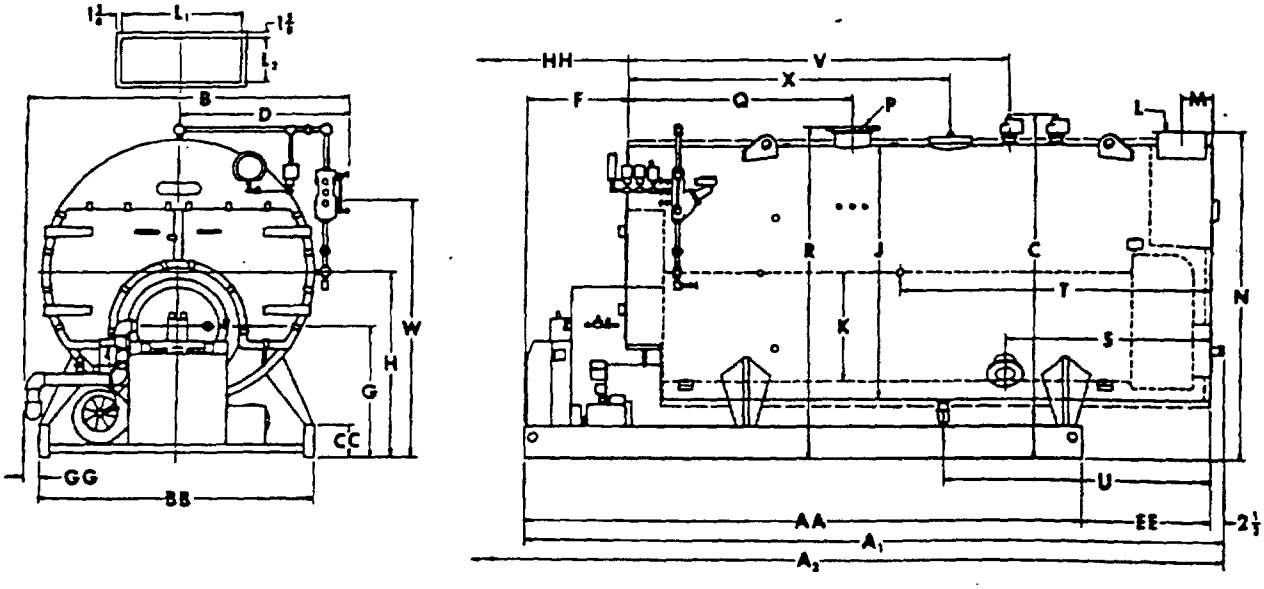


60 HP thru 750 HP

AS 000058

# TYPICAL SCOTCH GENERATOR SPECIFICATIONS

The contractor shall furnish and install_____Model No._____ Kewanee Scotch Generator (s) for (No. (2) (4) (5) (6) oil), (gas), or (combination gas-No. (2) (4) (5) (6) oil) firing. The units shall be of three-pass scotch design with water-cooled rear and two passes of firetubes, and shall be constructed in accordance with the ASME Code for (15 lbs. steam) (30 lbs. water) (150 lbs. steam).

The unit(s) shall have a gross output rating of not less than_____(MBh) (Bhp).

A refractory lined access opening with pyrex observation port shall be provided to permit entry into the rear combustion chamber. Access to tube sheets and firetubes for inspection or cleaning shall be provided without disconnecting any fuel piping or electrical wiring. Unit shall be of gas-tight construction throughout. Flue doors shall be gasketed and lined with insulating refractory.

Units shall be provided with lifting loops and factory installed enameled steel jacket with mineral fiber insulation.

All tubes shall be set with roller expander at each end. No welding of tubes to the tube sheets nor use of refractory baffling to provide the second or third pass will be permitted.

Units shall be assembled and wired, with burner, controls, trim, and skid type base installed at the factory.

Fuel burning equipment shall be forced draft type: Factory assembled, wired, mounted, and tested. The entire unit shall bear the Underwriters' Laboratories label and shall be ready for field connection to power and fuel supply. Equipment shall include forced draft fan with air damper; dual controls (limit and operating); flame sensing device; and control cabinet containing electronic flame safeguard and programmer, control circuit switch, necessary switching relays, indicating lights for major operations, numbered terminal strip, color-coded wiring and engraved nameplates.

All motors shall be for ..... volts, ..... cycle, ..... phase operation. Controls shall be 115 volt, 60 cycle, single phase. Magnetic motor starters with thermal over-load protection and a step-down control circuit transformer shall be provided in the control cabinet when other than 115 volt motors are specified.

Fuel burning equipment shall be set and adjusted by a factory-authorized representative to burn ..... G.P.H. of No. (2) (4) (5) (6) oil (and) (or) ..... C.F.H. of ..... Btu/cu. ft. (natural) (manufactured) (L. P.) gas having a ..... sp. gr. with ..... inches W.C. pressure at inlet of burner manual gas cock. Unit efficiency, based on flue gas analysis, shall be not less than 80%.

*NOTE: Specify job altitude if over 2,500 ft. above sea level*

Owner's representative shall be present to receive instructions in care and maintenance of the unit at the time it is started up by the service representative. Contractor shall provide a free service period of 90 days after startup.

*NOTE: Select applicable paragraphs below according to fuel and unit size. The following conforms to UL requirements. Specify additional controls if FM or FIA insured, or subject to special local utility requirements.*

### FOR GAS UNITS 20-50

Gas burner shall be of the multiple-jet flame retention type including a main gas control group consisting of an automatic operating gas valve, automatic safety gas valve, gas pressure regulator and gas cock; gas-electric ignition assembly consisting of a 6,000 volt ignition transformer, automatic gas valve, gas pressure regulator and gas cock; air-flow safety switch; flame rod flame detector; and all necessary controls for "on-off" type of operation.

### FOR GAS UNITS 60-750

Gas burner shall be of the annular port flame retention type including a main gas control group consisting of an automatic motorized gas valve, automatic safety gas valve, gas volume control valve with adjustable cam operator, gas pressure regulator, gas gauge, and gas cock; gas-electric ignition assembly consisting of a pilot burner, 6,000 volt ignition transformer, automatic gas valve, gas pressure regulator, and gas cock; air flow safety switch; lead sulphide flame detector; low fire interlock; and all necessary controls and linkage for (modulated) (two-position) firing with proved low fire start. Fuel-air control shall provide (modulated) (two-position) regulation of the air damper and the gas volume control valve by means of a modutrol motor.

### FOR PRESSURE ATOMIZING OIL UNITS 20-50

Oil burner shall be of the mechanical pressure atomizing type for No. 2 oil with a two-stage oil pump direct connected to the blower motor. Burner shall include oil atomizing nozzles; oil solenoid valve; 10,000 volt ignition transformer; photocell flame detector; and all necessary controls for "on-off" type of operation.

### FOR PRESSURE ATOMIZING OIL UNITS 60-150

Oil burner shall be of the mechanical pressure atomizing type for No. 2 oil with a two-stage oil pump assembly mounted on the boiler skid. Burner shall include oil atomizing nozzle; oil solenoid valve; oil control valve; gas-electric ignition assembly with pilot burner, 6,000 volt ignition transformer, automatic gas valve, gas pressure regulator and gas cock; air flow safety switch; lead sulphide flame detector; low fire interlock; and all necessary controls and linkage for (modulated) (two-position) firing with proved low fire start. Fuel-air control shall provide (modulated) (two-position) regulation of the air damper and the oil control valve by means of a modutrol motor.

### FOR AIR ATOMIZING OIL UNITS 60-750

Oil burner shall be of the air atomizing type for No. (2) (4) (5) (6) oil with an air unit consisting of air compressor, air pressure regulating valve, motor, inlet air filter, air proving safety switch, and air gauge. An oil pump assembly with gauges, strainer and relief valve shall be mounted on the boiler skid. Burner shall include air-oil atomizing nozzle; oil solenoid valve; oil metering valve with adjustable cam operator; thermostatically controlled electric oil heater *(omit for No. 2 oil)*; gas-electric ignition assembly consisting of a pilot burner, 6000 volt ignition transformer, automatic gas valve, gas pressure regulator and gas cock; air flow safety switch; lead sulphide flame detector; low fire interlock; and all necessary controls and linkages (modulated) (two-position) firing with proved low fire start. Fuel-air control shall provide (modulated) (two-position) regulation of the air damper and the oil control valve by means of a modutrol motor. (Oil burning equipment for No. 6 oil shall include factory mounted and piped (baffled u-tube oil preheater) (safety type oil preheater) complete with necessary temperature control for (below-water line water operation) (steam operation). A control shall be provided for No. 5 and 6 oil to permit continuous operation of oil pump and oil preheaters when burner is not running).

*Note: Specify oil tank heating system to be used.*

### FOR COMBINATION GAS-PRESSURE ATOMIZING OIL UNITS 20-50

Gas-oil burner shall consist of a combination multiple-jet flame retention type gas burner and mechanical pressure atomizing oil burner for No. 2 oil including all necessary controls for "on-off" type of operation. Gas controls shall include a main gas control group consisting of an automatic operating gas valve, automatic safety gas valve, gas pressure regulator and gas cock; gas-electric ignition assembly consisting of a 6,000 volt ignition transformer, automatic gas valve, gas pressure regulator and gas cock; air flow safety switch; and flame rod flame detector. Oil controls shall include a two-stage oil pump direct connected to the blower motor; oil atomizing nozzles; oil solenoid valve; 10,000 volt ignition transformer; and photocell flame detector. Changeover from one fuel to the other shall be accomplished by means of a manual fuel selector switch in the burner-mounted control cabinet. No changes in linkage, burner position, or mechanical adjustment shall be necessary when changing fuels. The fuel selector switch shall provide, through the combustion control relay, proper ignition timing for the fuel being burned.

### FOR COMBINATION GAS-PRESSURE ATOMIZING OIL UNITS 60-150

Gas-oil burner shall consist of a combination annular port flame retention type gas burner and mechanical pressure atomizing oil burner for No. 2 oil including all necessary controls for (modulated) (two-position) type of operation with proved low fire start. Gas controls shall include a main gas control group consisting of an automatic motorized gas valve, an automatic safety gas valve, gas volume control valve with adjustable cam operator, gas pressure regulator, gas gauge, and gas cock. Oil controls shall include a two-stage oil pump assembly; oil atomizing nozzle; oil solenoid valve; oil control valve. Controls for both fuels shall include a lead sulphide flame detector; air flow safety switch; low fire interlock; and gas-electric ignition assembly consisting of a pilot burner, 6000 volt ignition transformer, automatic gas valve, gas pressure regulator and gas cock. Fuel-air control shall provide (modulated) (two-position) regulation of the air damper, the gas volume control valve and the oil control valve by means of a modutrol motor. Changeover from one fuel to the other shall be accomplished by means of a manual fuel selector switch in the control cabinet. No changes in linkage, burner position, or mechanical adjustment shall be necessary when changing fuels. The fuel selector switch shall provide, through the combustion control relay, proper ignition timing for the fuel being burned.

### FOR COMBINATION GAS-AIR ATOMIZING OIL UNITS 60-750

Gas-oil burner shall consist of a combination annular port flame retention type gas burner and air atomizing oil burner for No. (2) (4) (5) (6) oil with all necessary controls for (modulated) (two-position) type of operation with proved low fire start. Gas controls shall include a main gas control group consisting of an automatic motorized gas valve, automatic safety gas valve, gas volume control valve with adjustable cam operator, gas pressure regulator, gas gauge and gas cock. Oil controls shall include an air unit consisting of an air compressor, air pressure regulating valve, motor, inlet air filter, check valve, air proving safety switch, air gauge; an oil pump assembly and relief valve mounted on the boiler skid; air-oil atomizing nozzle; oil solenoid valve; oil metering valve with adjustable cam operator; thermostatically controlled electric oil heater *(omit for No. 2 oil)*. (Oil burning equipment for No. 6 oil shall include factory mounted and piped (baffled u-tube oil preheater) (safety type oil preheater) complete with necessary temperature control for (below-water line water operation) (steam operation). A control shall be provided for No. 5 and 6 oil to permit continuous operation of separate oil pump and oil preheaters when burner is not running). *Note: Specify oil tank heating system to be used.* Controls for both fuels shall include lead sulphide flame detector; air flow safety switch; low fire interlock; and gas-electric ignition assembly consisting of a pilot burner, 6000 volt ignition transformer, automatic gas valve, gas pressure regulator and gas cock. Fuel-air control shall provide (modulated) (two-position) regulation of the air damper, the gas volume control valve, and the oil metering valve by means of a modutrol motor. Changeover from one fuel to the other shall be accomplished by means of a manual fuel selector switch in the control cabinet. No changes in linkage, burner position, or mechanical adjustment shall be necessary when changing fuels. The fuel selector switch shall provide, through the combustion control relay, proper ignition timing for the fuel being burned.

AS 000059

AS000060

The Heat Transfer Products Department of American-Standard provides one dependable source for all of your heat transfer needs and requirements. Industry leadership is strived for and maintained through the utilization of time-tested equipment design, research facilities, coordinated engineering service, years of practical experience and after-the-sale responsibility. Product specialists are always ready to assist you regardless of the simplicity or complexity of your heat transfer requirements.

# AMERICAN STANDARD

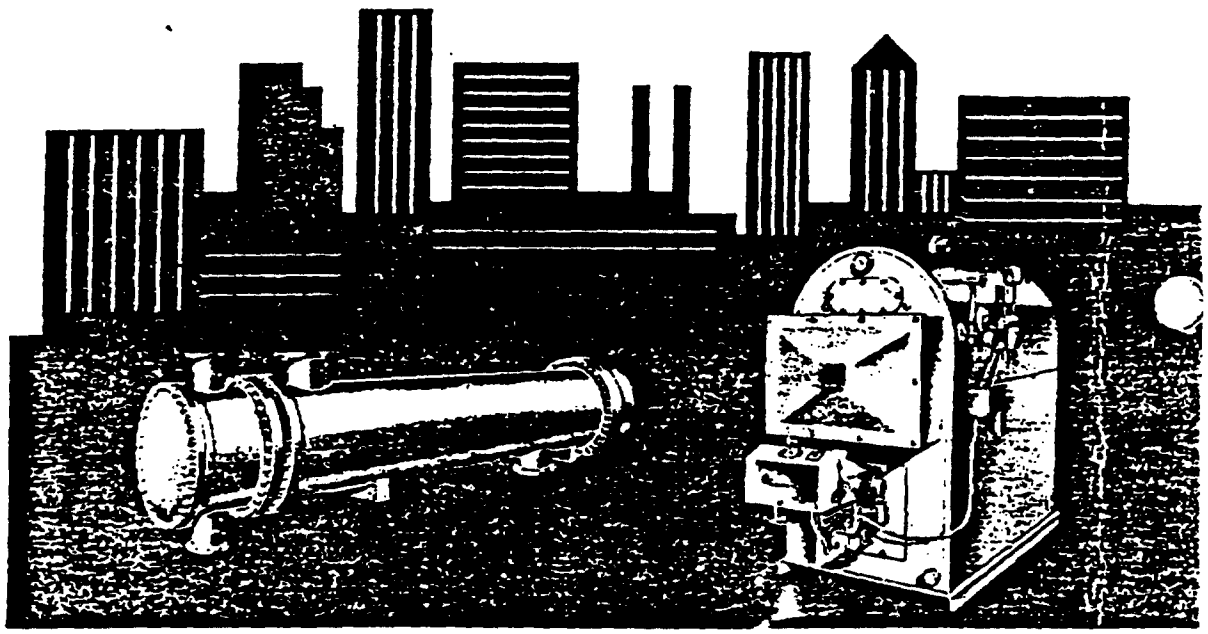

Join the ranks of some of the world's most discriminating buyers who have been satisfied with American-Standard heat exchanger and boiler products. You are certain to find similar satisfaction whether you're a user, contractor, or specifier. Also, you can benefit from our experience as countless others have — 100 years of boiler know-how and 50 years of progress in the heat exchanger industry.

AMERICAN STANDARD
HEAT TRANSFER PRODUCTS DEPT.
Executive Offices: Detroit, Michigan 48232

CONTACT YOUR NEAREST KEWANEE SALES OFFICE:

SALES OFFICES IN ALL PRINCIPAL CITIES

*In Canada:*
1201 Dupont St., Toronto 4, Ontario

*For Export:*
40 West 40th St., New York, N.Y. 10018

Bulletin 96-12-96A 5M 6-68 BL

AS000061

Litho in U.S.A.