APPLICATION
BASIC INSULATION

PIPE AND FITTINGS

CALCIUM SILICATE
SINGLE LAYER:

FIG. 60

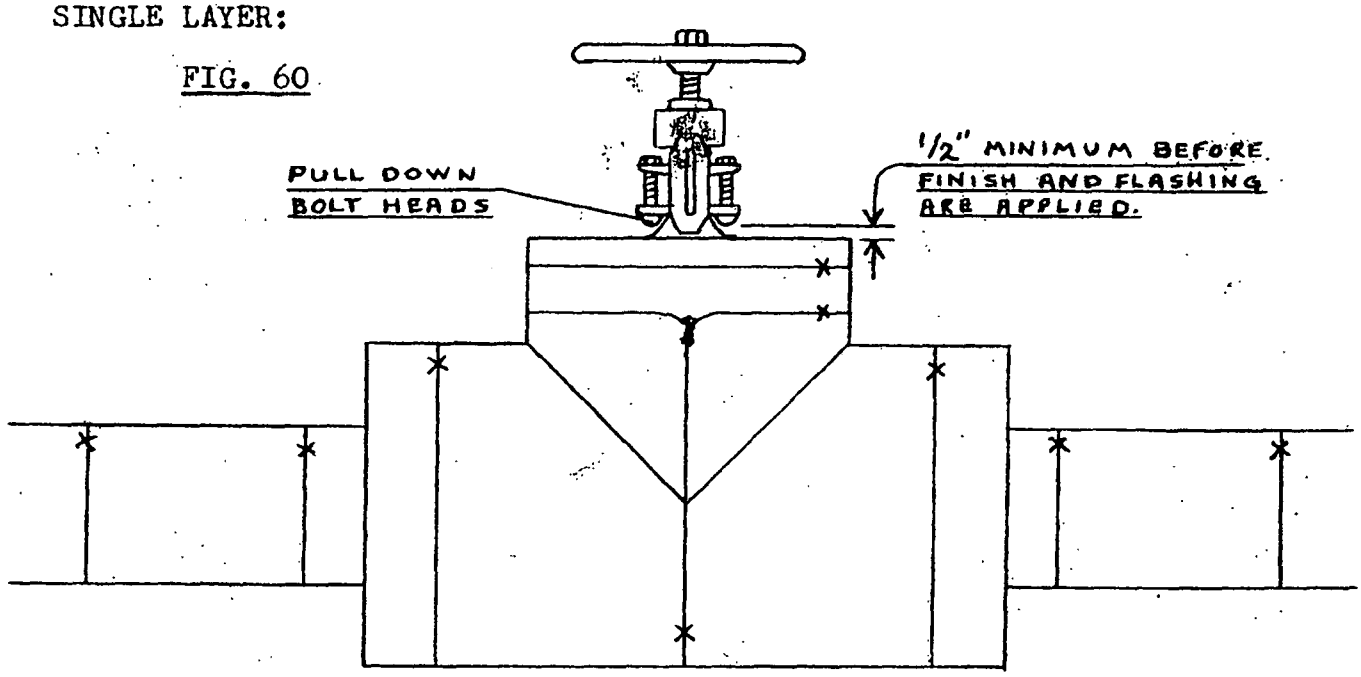

1.4 To allow packing gland clearance, on certain type flanged valves, it is necessary to bevel the cover down to the bonnet. Figure 61 A. When the valve is installed with the stem upright, this will create a pocket that will hold water if it is exposed to the weather. It shall be up to the mechanic to devise a means of draining this basin.
A piece of copper tubing embedded in the insulation as shown in Figure 61 B has proven satisfactory.

FIG. 61 A

