low temperature is pumped out of the evaporator and used at the point where it is required.

The ejector compresses the vapor which has been flashed in the evaporator, plus any entrained air taken from the circulated water, to a somewhat higher absolute pressure. The vapor and air mix with the impelling steam on the discharge side of the jet, and the total mixture then passes from the ejector into the condenser.

The slight amount of air which may be entrained in the cooled water is removed by a small secondary ejector which raises the pressure sufficiently so that the air can be discharged to the atmosphere. A secondary condenser is then necessary to condense the steam in the secondary jet.

While a single booster of smaller than 15 tons capacity is difficult to build, steam jet vacuum cooling units have been built for as small as 5 to 6 tons capacity. They can readily be built for steam pressures of from 5 to 200 psi, and condenser water temperatures as high as 90 F. The

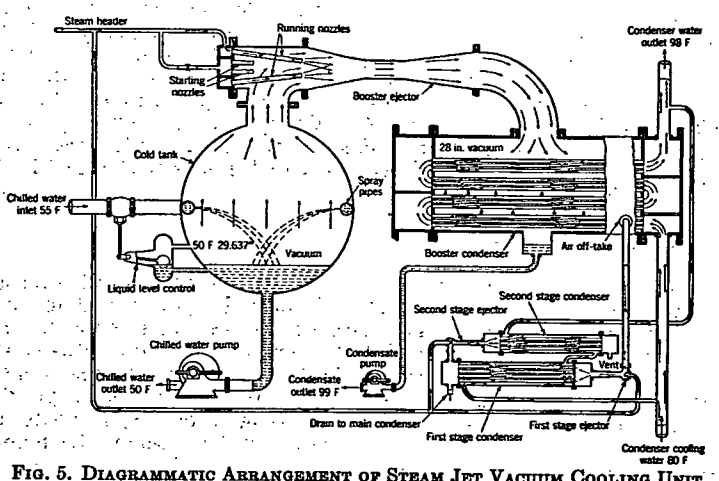

FIG. 5. DIAGRAMMATIC ARRANGEMENT OF STEAM JET VACUUM COOLING UNIT

steam consumption in pounds per hour per ton of refrigeration increases rapidly as the booster steam pressure is lowered. For example, the lowering of the booster steam pressure from 200 to 90 psi results in an increase in steam consumption of approximately 5 per cent, whereas a further decrease in booster steam pressure to 10 psi increases the steam consumption by approximately 72 per cent over that required at 200 psi.

The capacity of a steam jet system is usually controlled by controlling the number of boosters in use since the unit usually has several boosters operating on the same evaporator. Usually one booster is automatically controlled, whereas the others are manually operated. The capacity is dependent, as for all compressors, upon the evaporator temperature, or in other words, the suction pressure. For example, the capacity is lowered approximately 17 per cent if the evaporator or chilled water temperature is lowered from 50 to 45 F. The capacity therefore can be controlled to some extent by regulating the evaporator temperature.

The Absorption System

The absorption and compression refrigeration cycles differ only with respect to the method of compression. Each cycle requires a condenser, expansion valve, and evaporator, but the absorption cycle utilizes three major equipments in place of the mechanical compressor; these equipments are the *absorber*, the *pump*, and the *generator*. Vapor from the evaporator is absorbed by a low temperature absorbent fluid which is then pumped to the generator where heat is supplied to boil off the refrigerant. The absorbent is now cooled and readmitted, through a pressure-reducing valve, to the absorber.

In addition to the three primary equipments of the absorption cycle it is necessary to provide auxiliary equipment, usually an analyzer and a rectifier, to remove from the refrigerant leaving the generator, insofar as is possible, the absorbent which vaporizes and leaves the generator with the refrigerant. Removal of this material is of great importance to effective operation of the system, since even a small concentration of absorbent

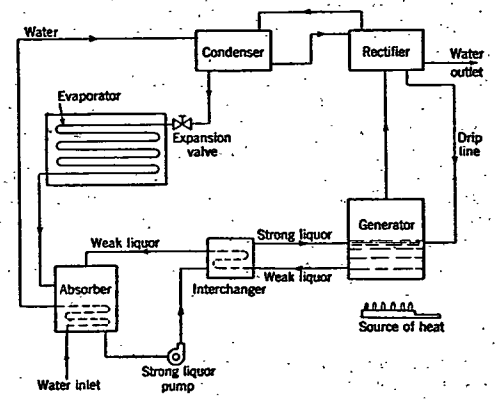

FIG. 6. CLOSED ABSORPTION SYSTEM

in the refrigerant will suffice to reduce greatly the evaporator pressure required for maintenance of a given evaporator temperature. Thermodynamic analysis of absorption cycles is relatively complex, and requires the use either of tables or graphs showing the equilibrium relationships and thermodynamic properties of the refrigerant-absorbent combination. Data of this kind are available in bibliography item A, and a discussion of various absorbents is given in bibliography item F. Thermodynamically, the effectiveness of a refrigerant-absorbent combination increases directly with its negative deviation from Raoult's Law.

Fig. 6 shows a typical absorption cycle flow diagram. Cooling water first goes through the absorber (where it extracts the heat of absorption which is liberated by the refrigerant vapor as it goes into solution), then through the condenser, and finally through the rectifier. Refrigerant from the evaporator enters the absorber where it goes into solution in the absorbent; the high concentration solution is then pumped to the generator where heat is supplied; the refrigerant (with some absorbent vapor) leaves for the rectifier and the warm low concentration solution is returned to