Pushbutton and Rotary Drum Master Stations (Continued)

Approximate Dimensions & Weights (Continued)

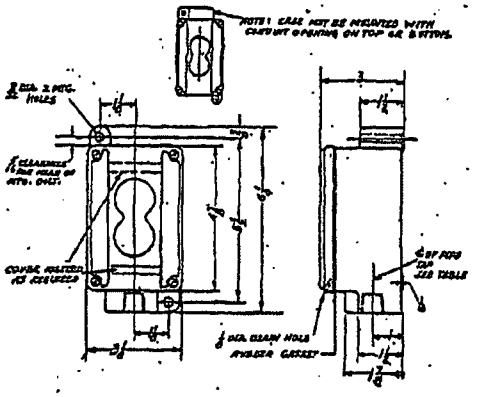

Standard Duty Spraytight Pushbutton Station
Net Wt — 1.5 Lbs.

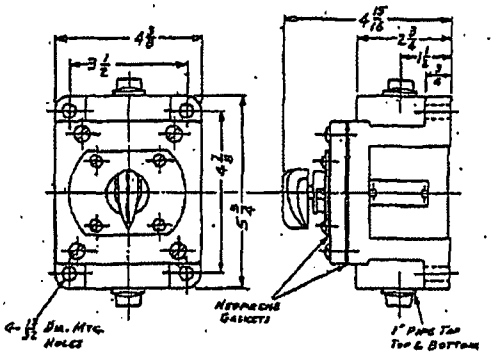

Single Unit Submersible Rotary Drum Switch Type Master Station.
Net Wt — 3.5 Lbs.

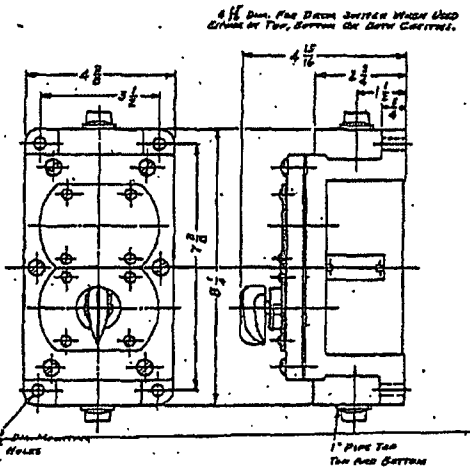

Two unit submersible master station with 2 rotary drum switches, or with 1 rotary drum switch and 1 indicating light element. (Momentary contact elements cannot be used in this station because the pressure of either a 15 or 50 foot head will operate them).
Net Wt — 5 Lbs.

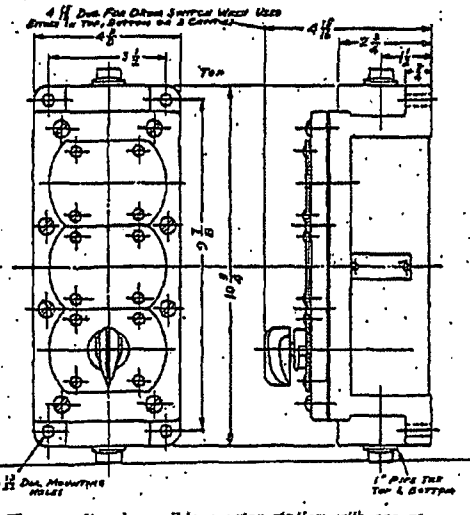

Three unit submersible master station with one or more rotary drum switches and balance of indicating light elements. (Momentary contact elements cannot be used in this station because the pressure of either a 15 or 50 foot head will operate them).
Net Wt — 6 Lbs.

The End

CUTLER 116/399
12/1/2008